IAI
Quality and Innovation

Vertical Gripper, Slider Type

RCD-GRSN RCP2-GRSS
RCP4-GRSML/GRSLL/GRSWL

Vertical Gripper, Lever Type

RCP2-GRLS
RCP4-GRLM/GRLL/GRLW

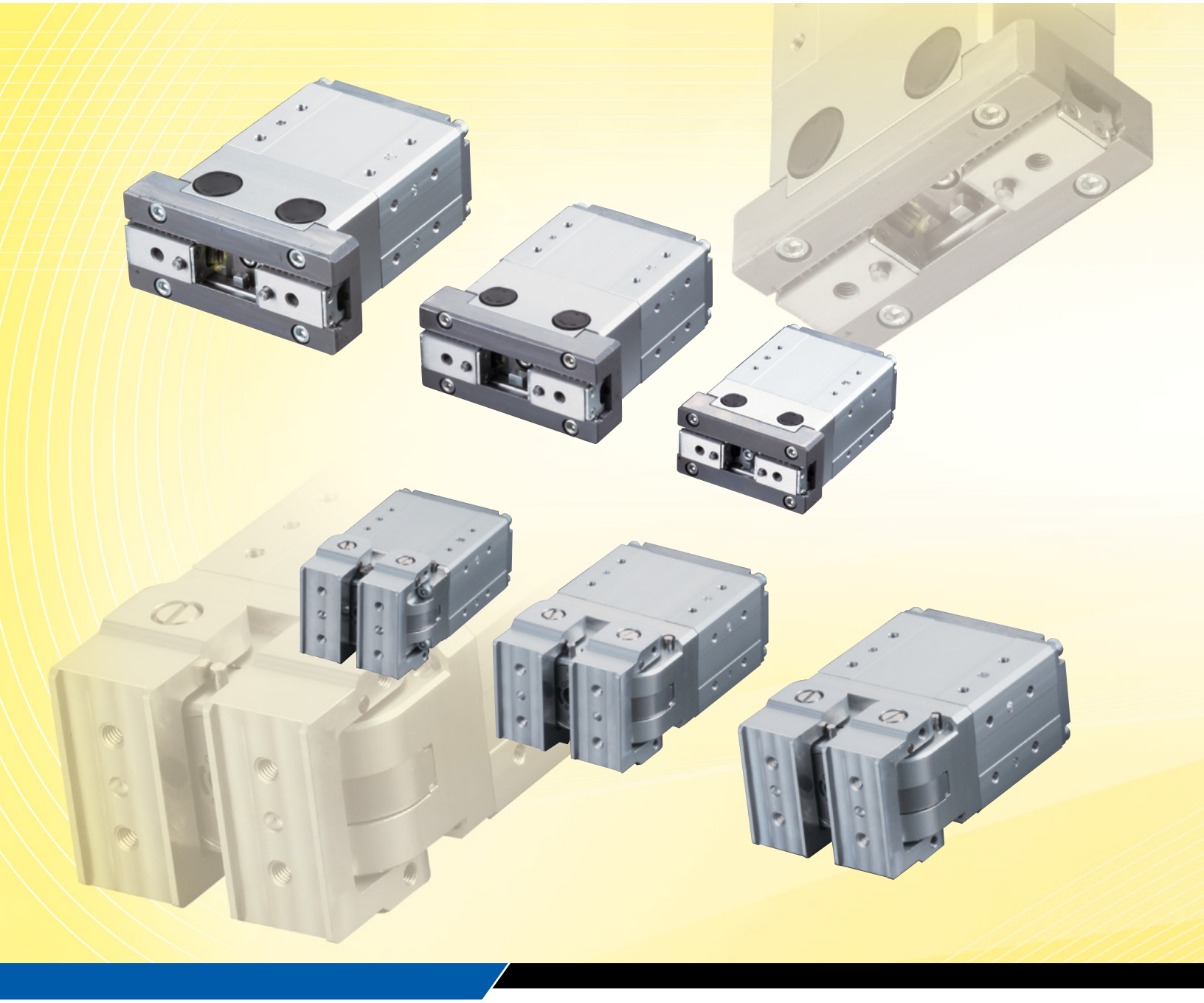

www.intelligentactuator.com

Achieving High-speed Opening/Closing

Vertical Grippers – The Newest Additions to IAI's Mo

Slider Type

NEW RCD-GRSNA

NEW RCP2-GRSS

NEW RCP4-GRSML

NEW RCP4-GRSLL

NEW RCP4-GRSWL

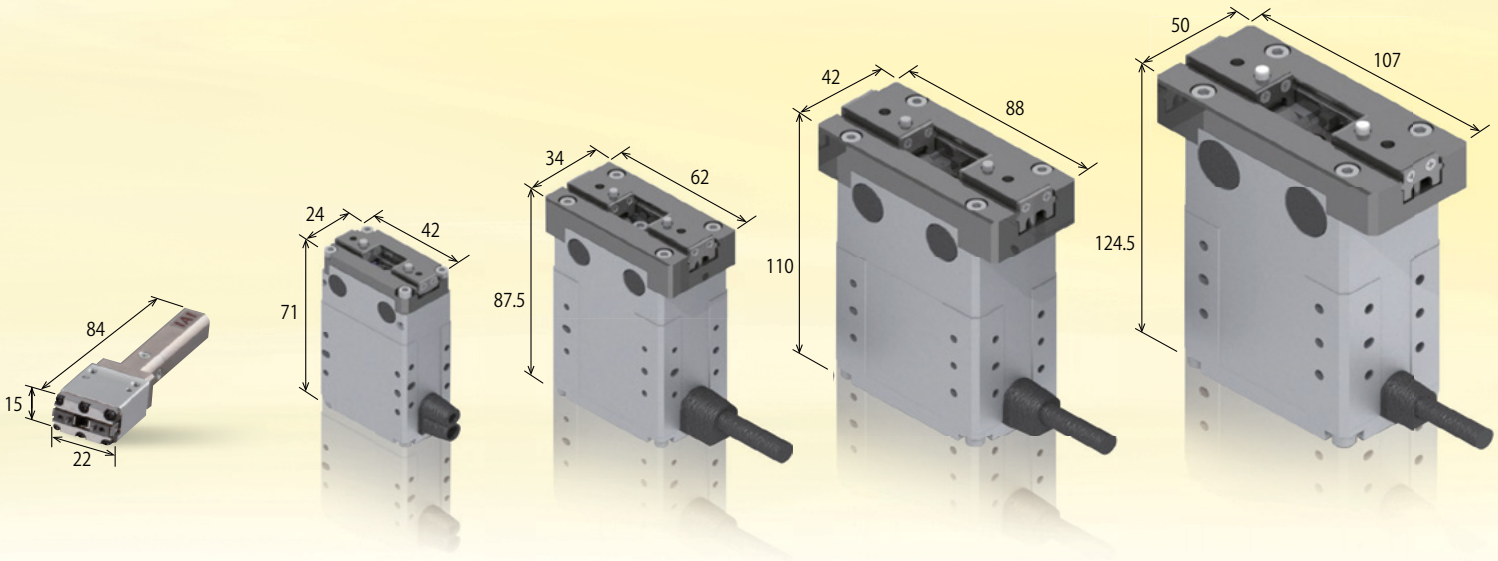

1 Slider Type and Lever Type

Vertical grippers are available in two types, including the slider type that comes with a guide to achieve excellent rigidity, and the lever type whose levers open by 180 degrees for easy gripping of the work part.

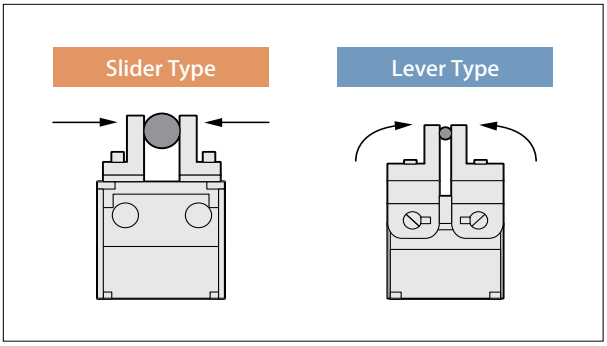

Graph of Gripping Forces of Slider Types

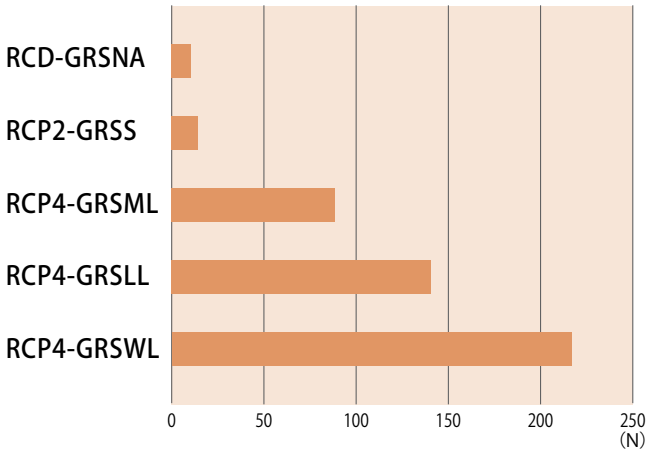

and High Gripping Force

otorized Gripper Series

ROBO CYLINDER

Lever Type

RCP2-GRLS

NEW RCP4-GRLM

NEW RCP4-GRLL

NEW RCP4-GRLW

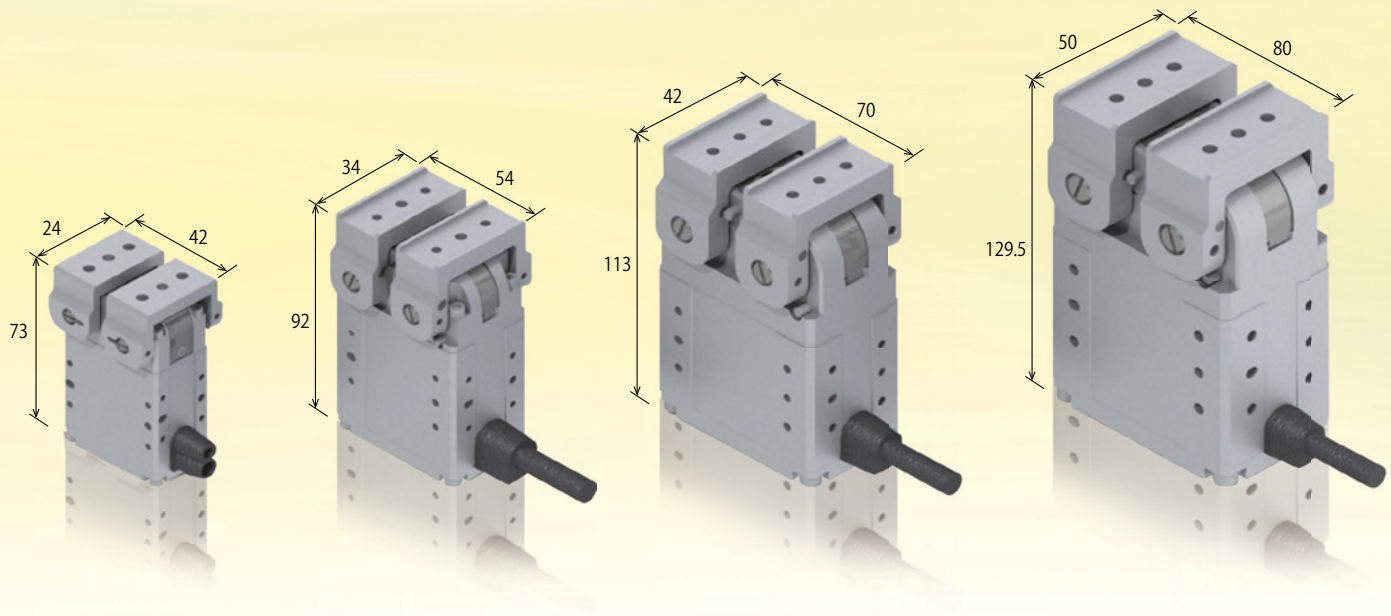

2 Supporting Multi-point Positioning, Adjustable Gripping Force

Up to 512 positioning points are supported via servo control, and the force with which to grip the work part is adjustable. This makes it possible to adjust the finger opening/closing width and grip easy-to-deform work parts.

3 Highly Rigid, Accurate Guide and Driving Part

The slider type comes with a highly rigid linear guide to demonstrate high moment rigidity. Thanks to its backlash eliminating mechanism, the guide is subject to less displacement upon positioning. The driving part adopts a geared structure (worm + helical gears) to achieve high rigidity and excellent response.

4 Self-locking Mechanism to Prevent the Work Part from Dropping upon Power Off

The self-locking mechanism prevents the work part from dropping when the power is turned off or an emergency stop is actuated. The slider and levers can be opened with ease using an Allen wrench.
* The actuator cannot be kept pushing the work part.

5 Ultra-compact Slider Type

NEW RCD-GRSNA

- Generating high gripping force with a compact body (gripping force: 10 N)
- One of the smallest actuator in the industry with a cross-section area of 22 x 15 mm

Gripper Lineup

RCD (BLDC Motor)

- 2-Finger
  - Vertical Type
    - Slider Type
      - NEW RCD-GRSNA P.7

RCP2 RCP4 (Pulse Motor)

- 2-Finger
  - Vertical Type
    - Slider Type
      - RCP2-GRSS P.9
      - NEW RCP4-GRSML P.11
      - NEW RCP4-GRSLL P.13
      - NEW RCP4-GRSWL P.15
    - Lever Type
      - RCP2-GRLS P.17
      - NEW RCP4-GRLM P.19
      - NEW RCP4-GRLL P.21
      - NEW RCP4-GRLW P.23
  - Horizontal Type
    - Slider Type
      - RCP2-GRS
      - RCP2-GRM
      - RCP2-GRST
      - RCP2-GRHM
      - RCP2-GRHB
- 3-Finger
  - Slider Type
    - RCP2-GR3SS
    - RCP2-GR3SM
  - Lever Type
    - RCP2-GR3LS
    - RCP2-GR3LM

RCS2 (Servo Motor)

- 2-Finger
  - RCS2-GR8

Refer to the General RoboCylinder Catalog

Gripper Specification

Slider Type

Type	Mini Slider Type	Small Slider Type	Medium Slider Type	Large Slider Type	Extra Large Slider Type
Model	RCD-GRSNA	RCP2-GRSS	RCP4-GRSML	RCP4-GRSLL	RCP4-GRSWL
External View					
Motor	DC brushless motor	Pulse motor			
		□20×t30	□28×t34.5	□35×t37	□42×t47.5
Position Detection	Optical encoder	Magnetic encoder (incremental)			
Drive System	Lead screw + grooved cam	Worm + double-helical + helical rack gears			
Guide	Linear guide				
Opening/Closing Stroke (mm)	4	8	14	22	30
Gripping Force (N)	10	14	87	140	220
Opening/Closing Speed (mm/sec)	67	～78	～94	～125	157
Positioning Repeatability (mm)	±0.05	±0.01			
Gripping Force Adjustment Range	40～70%	20～70%			
Actuator Cable (*1)	Standard cable	Robot cable			
Extension Cable (*2)	Standard cable (Model: CB-CAN-MPA□□□) Robot cable (Model: CB-CAN-MPA-□□□RB)	Robot cable (Model: CB-APSEP-MPA-□□□)	Standard cable (Model: CB-CAN-MPA□□□) Robot cable (Model: CB-CAN-MPA□□□-RB)		
Exterior Dimensions of Actuator Frame (L x W x H)	22×15×84	42×24×71	62×34×87.5	88×42×110	107×50×124.5
Actuator Mass (kg)	0.085	0.2	0.5	1.0	1.6
See Page	P.7	P.9	P.11	P.13	P.15

(*1) This is the cable of approx. 0.2 m in length coming out from the gripper.
(*2) This cable is used to connect the controller to the connector at the end of the actuator cable.

Lever Type

Type	Small Lever Type	Medium Lever Type	Large Lever Type	Extra Large Lever Type
Model	RCP2-GRLS	RCP4-GRLM	RCP4-GRLL	RCP4-GRLW
External View				
Motor	Pulse motor			
	□20×t30	□28×t34.5	□35×t37	□42×t47.5
Position Detection	Magnetic encoder (incremental)			
Drive System	Worm + double-helical gears			
Guide	—			
Range of Operation (deg)	180			
Gripping Force (N)	6.4	35	60	90
Opening/Closing Speed (deg/sec)	～600	～600	～600	～643
Positioning Repeatability (deg)	±0.05			
Gripping Force Adjustment Range	20～70%			
Actuator Cable (*1)	Standard cable	Robot cable		
Extension Cable (*2)	Robot cable (Model: CB-APSEP-MPA-□□□)	Standard cable (Model: CB-CAN-MPA□□□) Robot cable (Model: CB-CAN-MPA□□□-RB)		
Exterior Dimensions of Actuator Frame (L x W x H)	42×24×73	54×34×92	70×42×113	80×50×129.5
Actuator Mass (kg)	0.2	0.5	1	1.4
See Page	P.17	P.19	P.21	P.23

(*1) This is the cable of approx. 0.2 m in length coming out from the gripper.
(*2) This cable is used to connect the controller to the connector at the end of the actuator cable.

System Configuration

● Configuration of DSEP System

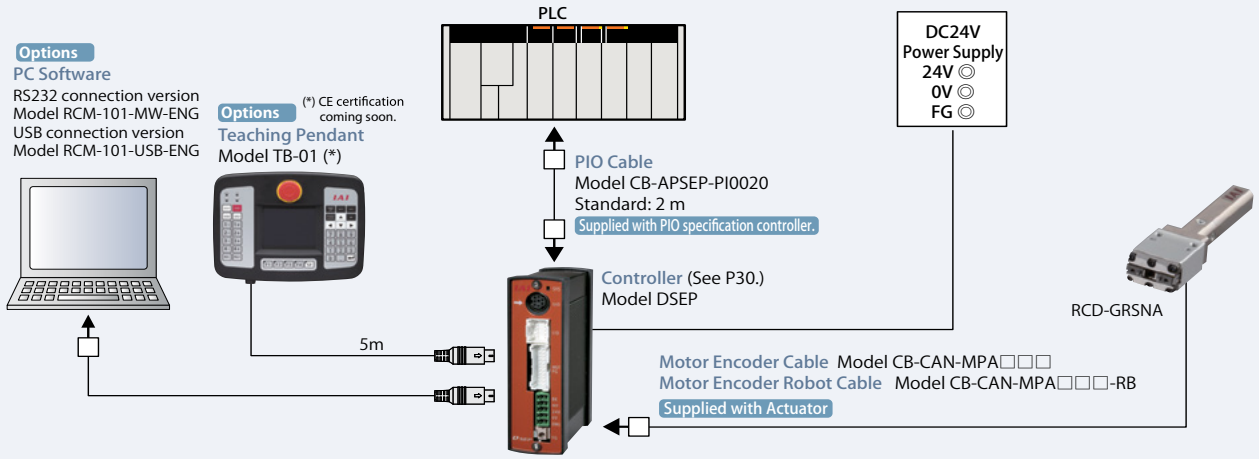

● Configuration of PCON-CA System

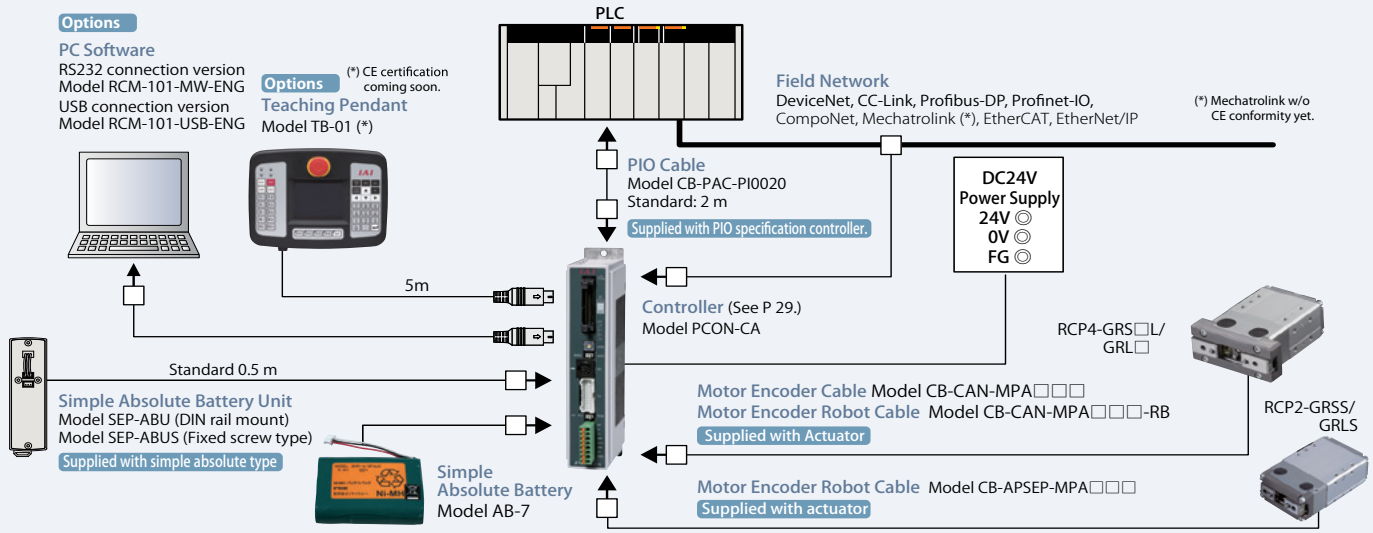

● Configuration of MSEP System

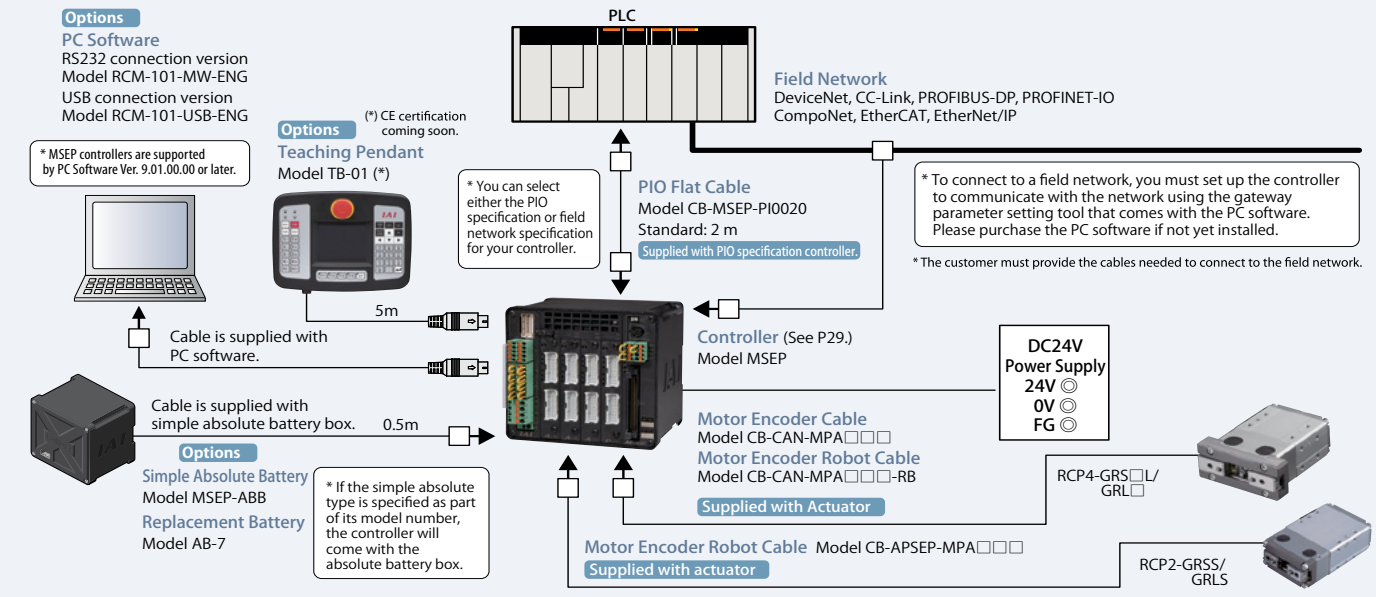

(Note) For the DCON-CA configulation, please refer to the ACON-CA/DCON-CA catalog (CJ0211-1A).

Model Number

<RCD Series>

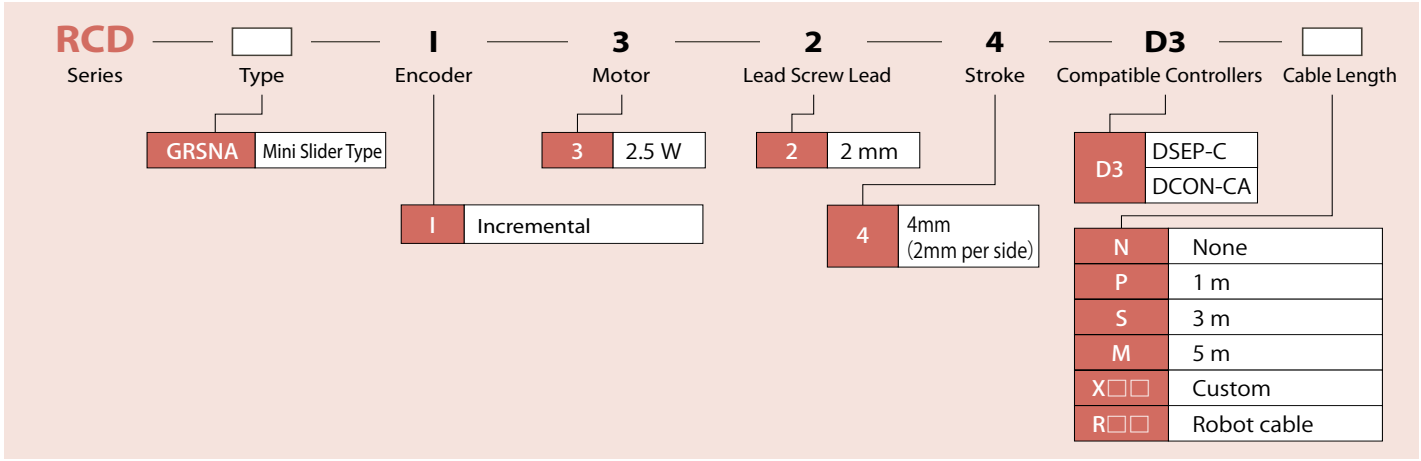

<RCP2 Series>

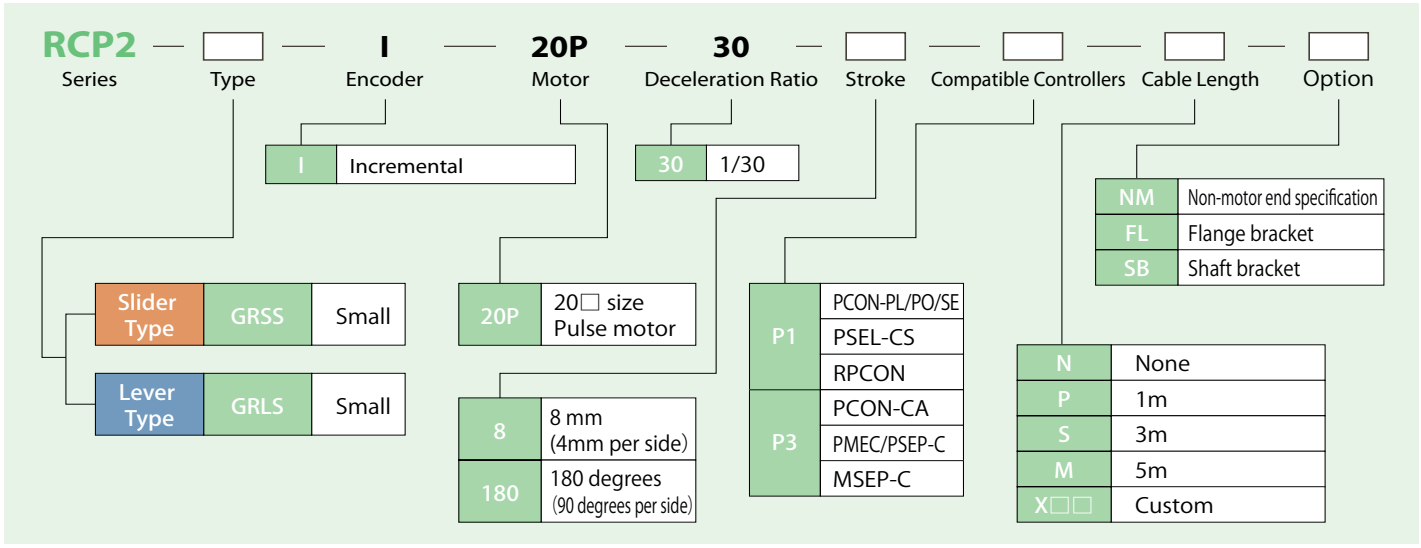

<RCP4 Series>

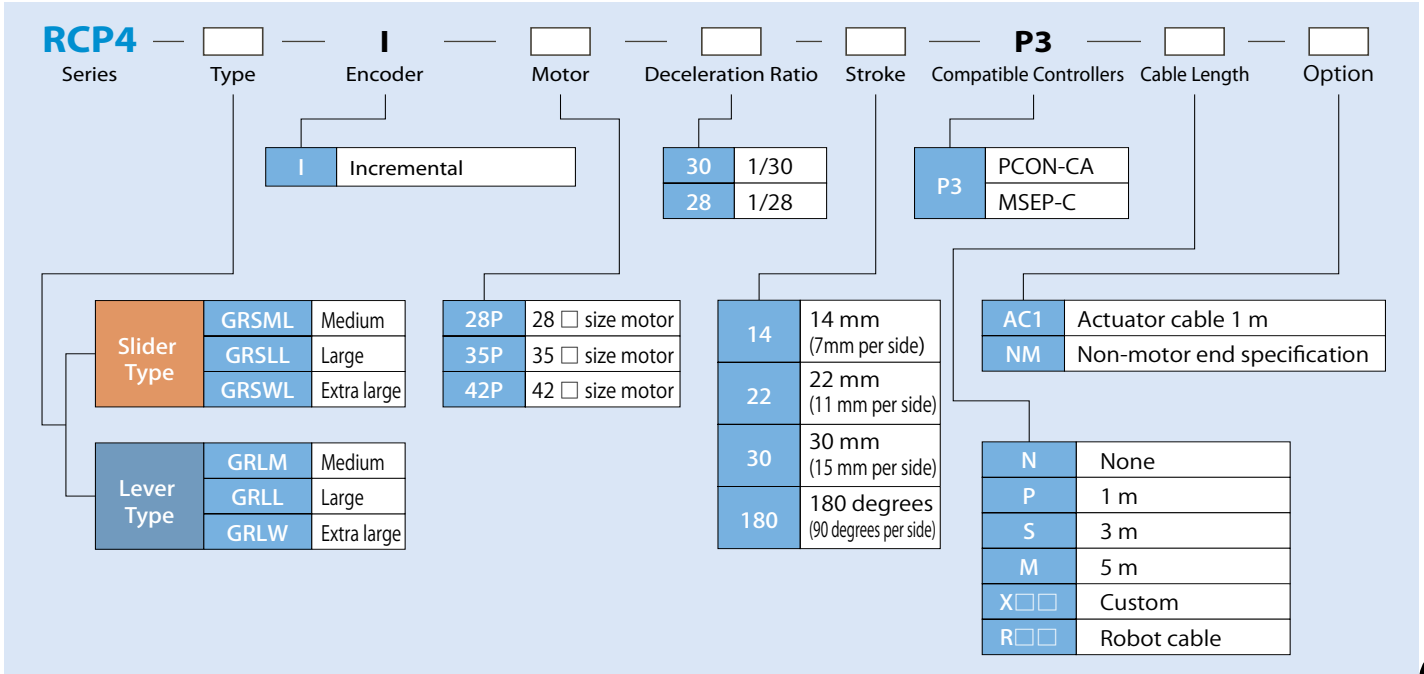

RCD-GRSNA

RoboCylinder 2-Finger Gripper Vertical Mini Slider Type
22 mm Width BLDC Motor

■ Model Description

RCD – **GRSNA** – **I** – **3** – **2** – **4** – **D3** – ☐

Series	Type	Encoder	Motor	Lead	Stroke	Compatible Controllers	Cable Length
		I: Incremental	3: 2.5 W BLDC motor	2 : 2 mm	4 : 4 mm (2 mm per side)	D3: DSEP DCON-CA	N : None P : 1 m S : 3 m M : 5 m X☐☐ : Custom R☐☐ : Robot cable

CE RoHS

POINT Notes on Selection

(1) The maximum opening/closing speed indicates the operating speed on one side. The relative operating speed is twice this value.
(2) The maximum gripping force is the sum of the gripping forces of both fingers, at a gripping point where there is no offset or overhang distance. The work part weight that can be actually moved depends on the friction coefficient between the gripper fingers and the work part, as well as on the shape of the work part. As a rough guide, a work part's weight should not exceed 1/10 to 1/20 of the gripping force. (See page 25 for details.)
(3) The maximum acceleration while moving is 1 G.

■ Gripping Force vs. Electric Current Limit

The gripping (pushing) force can be adjusted freely within the range of electric current limits of 40% to 70%.

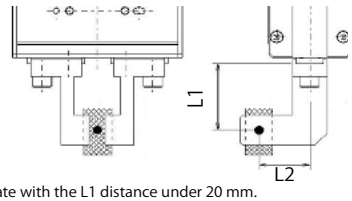

* Operate with the L1 distance under 20 mm.
* The gripping force in the graph below assumes that L1 and L2 inthe figure above are zero. (Refer to p. 26 for the rough guide ongripping force at each distance of L1.) Also note that the grippingforce is a sum of gripping forces of both fingers.

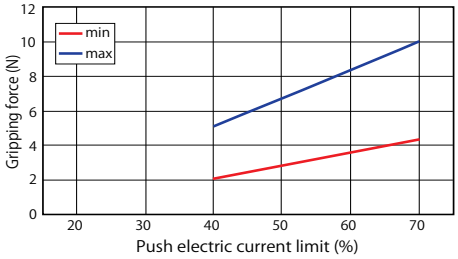

* The gripping force graph above shows the number of references.

* Please note that, when gripping (pushing), the speed is fixed at 5 mm/s.

Actuator Specifications

■ Lead and Payload

Model Number	Deceleration Ratio	Max. Gripping Force (N)	Stroke (mm)
RCD-GRSNA-I-3-2-4-D3-①	3.7	10 (5 per side)	4 (2 per side)

Legend: ① Cable length

■ Stroke and Max. Opening/Closing Speed

Stroke (mm)	Max. Speed (mm/s)
4	7 6

Cable List

Type	Cable Symbol	
Standard Type	**P** (1m)	
	S (3m)	
	M (5m)	
Special Length	**X06** (6m) ~ **X10** (10m)	
	X11 (11m) ~ **X15** (15m)	
	X16 (16m) ~ **X20** (20m)	
Robot Cable	**R01** (1m) ~ **R03** (3m)	
	R04 (4m) ~ **R05** (5m)	
	R06 (6m) ~ **R10** (10m)	
	R11 (11m) ~ **R15** (15m)	
	R16 (16m) ~ **R20** (20m)	

Actuator Specifications

Item	Description
Drive System	Lead screw + grooved cam
Positioning Repeatability	±0.05 mm
Backlash per finger	0.4 mm or less
Lost Motion	0.25 mm or less per side
Guide	Linear guide
Static Allowable Moment	Ma: 0.04N•m Mb: 0.04N•m Mc: 0.07N•m
Weight	0.085 kg
Ambient Operating Temp./Humidity	0 to 40° C, 85% RH or less (non-condensing)

Dimensions

CAD drawings can be downloaded from the website. www.intelligentactuator.com

2D CAD

*1 The maximum range in which the finger operates for home return operation, etc. Be careful not to let the finger contacts other finger belonging to the customer or any work present nearby.
*2 The finger moves to the dimensions shown in [ ] during home return, so pay attention to contact.
*3 The actuator cable is not a robot cable, so it must be secured while in use.

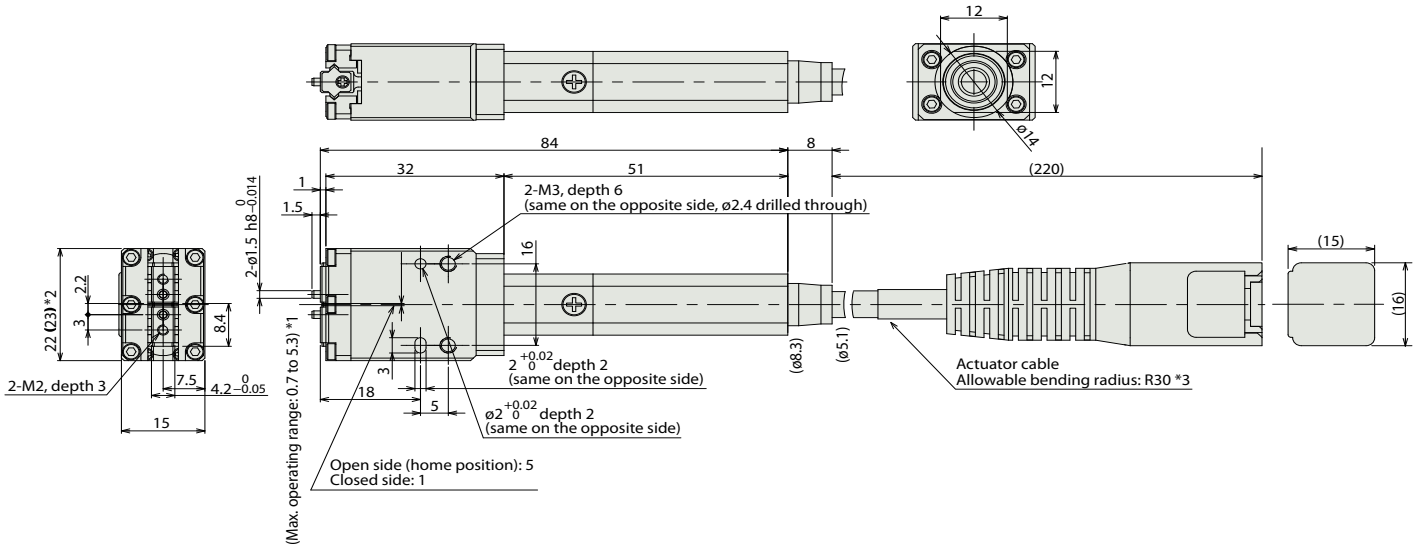

Compatible Controllers

The RCD series actuators can operate with the controllers below. Select the controller according to your usage.

Name	External View	Model Number	Description	Max. Pos. Points	Input Voltage	Power Supply Capacity		See Page
Solenoid Valve Type		DSEP-C-3I-①-2-0	Simple controller capable of operating actuators with the same signals used to operate solenoid valves, supporting both the single-solenoid method and the double-solenoid method.	3 points	DC24V	(Standard specification) Rated: 0.7A Max: 1.5A		→ P30
Dustproof Solenoid Valve Type		DSEP-CW-3I-①-2-0						
Positioner Type		DCON-CA-3I-①-2-0	PIO control ready	512 points		Rated: 0.7A Max: 1.5A		→ P30
Pulse Train Type		DCON-CA-3I-PL□-2-0	Pulse-train input ready	–				
Network Type		DCON-CA-3I-④-0-0	Field network ready	768 points				

* ① indicates I/O type (NP/PN).
* □ indicates N (NPN specification) or P (PNP specification) symbol.
* ④ indicates field network specification symbol.

Note: Take note that the simple absolute type is not available.

RCP2-GRSS

RoboCylinder 2-Finger Gripper Vertical Small Slider Type
42 mm Width Pulse Motor

■ Model Description **RCP2-GRSS-I-20P-30-8-□-□-□**

Series	Type	Encoder	Motor	Deceleration	Stroke	Compatible Controllers	Cable Length	Option
RCP2	GRSS	I: Incremental * The Simple absolute encoder is also considered type "I."	20P : 20□ size Pulse motor	30 : 1/30 Deceleration ratio	8 mm (4mm per side)	P1:PCON-PL/PO/SE PSEL RPCON P3:PCON-CA PMEC/PSEP MSEP	N : None P : 1m S : 3m M : 5m X□□ : Custom	NM : Non-motor end specification FB : Flange bracket SB : Shaft bracket

CE RoHS

POINT Notes on Selection

(1) The maximum opening/closing speed indicates the operating speed on one side. The relative operating speed is twice this value.

(2) The maximum gripping force is the sum of the gripping forces of both fingers, at a gripping point where there is no offset or overhang distance. The work part weight that can be actually moved depends on the friction coefficient between the gripper fingers and the work part, as well as on the shape of the work part. As a rough guide, a work part's weight should not exceed 1/10 to 1/20 of the gripping force. (See page 25 for details.)

(3) The rated acceleration while moving is 0.3 G.

■ Gripping Force vs. Electric Current Limit

The gripping (pushing) force can be adjusted freely within the range of electric current limits of 20% to 70%.

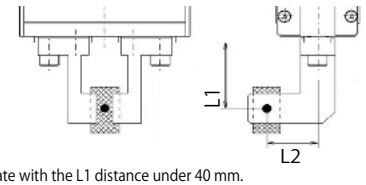

* Operate with the L1 distance under 40 mm.
* The gripping force in the graph below assumes that L1 and L2 in the figure above are zero. (Refer to p. 26 for the rough guide on gripping force at each distance of L1.) Also note that the gripping force is a sum of gripping forces of both fingers.

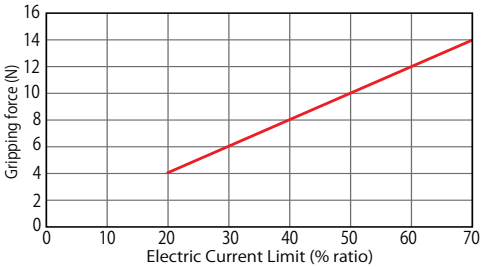

* The gripping force graph above shows the number of references. Please allow margins up to ± 15%.

* Please note that, when gripping (pushing), the speed is fixed at 5 mm/s.

Actuator Specifications

■ Lead and Payload

Model Number	Deceleration Ratio	Max. Gripping Force (N)	Stroke (mm)
RCP2-GRSS-I-20P-30-8-□-□-□	30	14 (7 per side)	8 (4 per side)

Legend: □ Compatible controllers □ Cable length □ Options

■ Stroke and Max. Opening/Closing Speed

Deceleration Ratio \ Stroke	8 (mm)
30	78 (per side)

(Unit: mm/s)

Cable List

Type	Cable Symbol	
Standard Type (Robot cable)	**P** (1m)	
	S (3m)	
	M (5m)	
Special Length	**X06** (6m) ~ **X10** (10m)	
	X11 (11m) ~ **X15** (15m)	
	X16 (16m) ~ **X20** (20m)	

* The standard cable is the motor-encoder integrated robot cable.

Actuator Specifications

Item	Description
Drive System	Worm gear + helical gear + helical rack
Positioning Repeatability	±0.01 mm
Backlash	0.2 mm or less per side (constantly pressed out by a spring)
Lost Motion	0.05 mm or less per side
Guide	Linear guide
Allowable Static Load Moment	Ma: 0.5N•m Mb: 0.5N•m Mc: 1.5N•m
Weight	0.2 kg
Ambient Operating Temp./Humidity	0 to 40°C, 85% RH or less (non-condensing)

Option List

Name	Option Code	See Page	
Non-motor end specification	**NM**	P10	
Flange bracket	**FB**	–	
Shaft bracket	**SB**	–	

Dimensions

CAD drawings can be downloaded from the website. www.intelligentactuator.com

2D CAD

* The opening side of the slider is the home position.
*1 The motor-encoder cable is connected here.
*2 Use all tap holes (4 locations) on the same mounting surface to secure the actuator.
*3 Do not screw in the bolt beyond the depth of the fixing tap hole. The internal parts may be damaged.
*4 The actuator cable is not a robot cable, so secure the cable while the actuator is in use.

* The standard configuration is that the home is on the open side. If you wish to have the home on the closed side, specify an applicable option (model: NM).

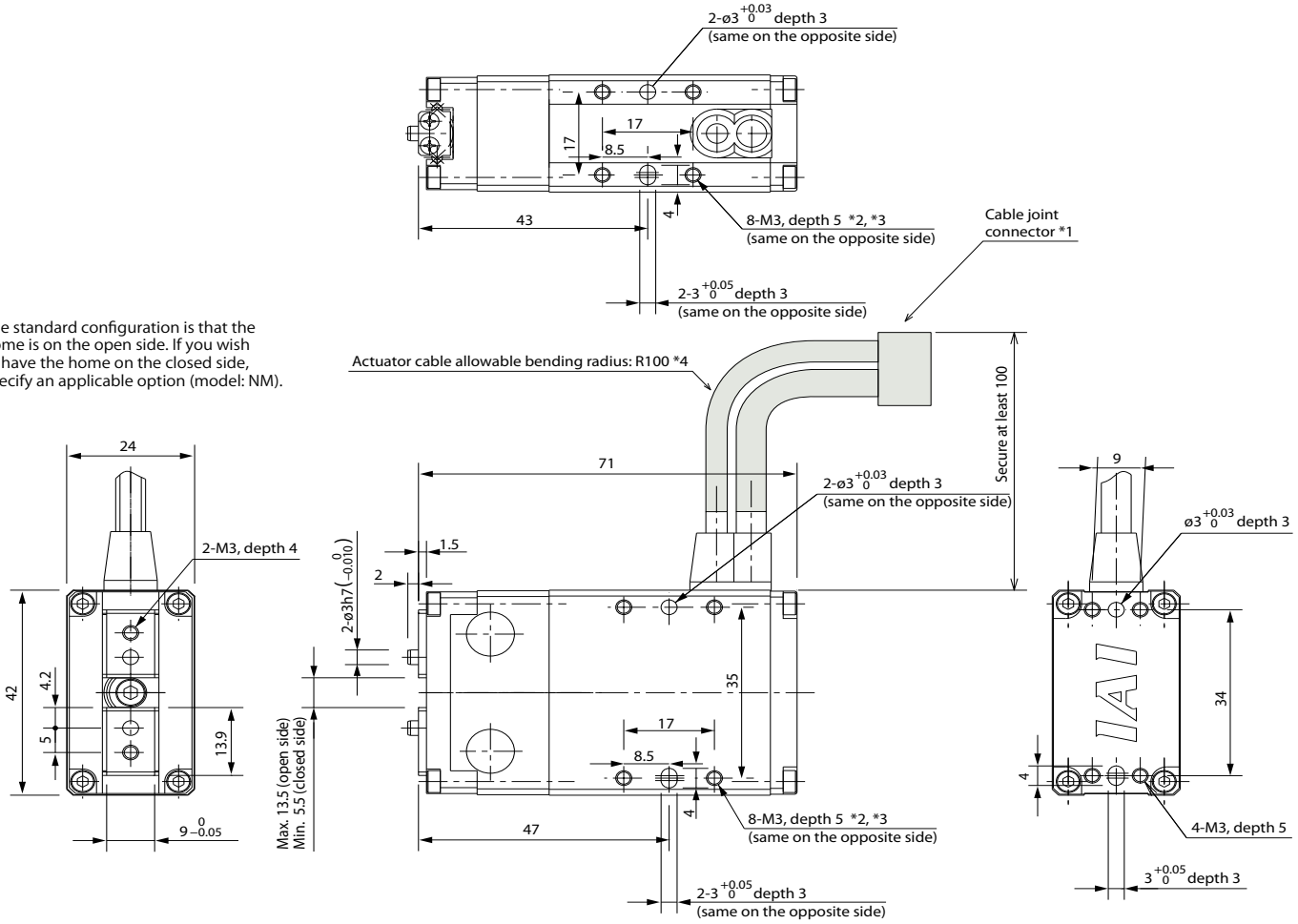

Compatible Controllers

The RCP2 series actuators can operate with the controllers below. Select the controller according to your usage.

Name	External View	Model Number	Description	Max. Pos. Points	Input Voltage	Power Supply Capacity		See Page
Solenoid Valve Multi-axis Type PIO Specification		MSEP-C- ③ -~- ① -2-0	Positioner type based on PIO control, allowing up to 8 axes to be connected	3 points	DC24V	See RoboCylinder General Catalog.		→ P29
Solenoid Valve Multi-axis Type Network Specification		MSEP-C- ③ -~- ④ -0-0	Filed network-ready positioner type, allowing up to 8 axes to be connected	256 points				
Positioner Type		PCON-CA-20PI- ①-2-0	PIO control ready	512 points		1A max.		
Pulse Train Type		PCON-CA-20PI-PL□-2-0	Pulse-train input ready	—				
Network Type		PCON-CA-20PI- ④-0-0	Field network ready	768 points				
Pulse Train Type (Differential Line Driver Specification)		PCON-PL-20PI- ① -2-0	Differential line driver ready	—		See RoboCylinder General Catalog.		See RoboCylinder General Catalog.
Pulse Train Type (Open Collector Specification)		PCON-PO-20PI- ① -2-0	Open collector ready					
Serial Communication Type		PCON-SE-20PI-N-0-0	Dedicated serial communication type	64 points				
Program Control Type		PSEL-CS-1-20PI- ① -2-0	Program operation is possible. Operation is possible up to 2 axes.	1500 points				

* This is for the single-axis PSEL.
*③ indicates number of axes (1~8).
* ① indicates I/O type (NP/PN).
* ④ indicates field network specification symbol.
* □ indicates N (NPN specification) or P (PNP specification) symbol.

RCP4-GRSML

RoboCylinder 2-Finger Gripper Vertical Medium Slider Type
54 mm Width Pulse Motor

■ Model Description

RCP4	GRSML	I	28P	30	14	P3	☐	☐
Series	Type	Encoder	Motor	Deceleration	Stroke	Compatible Controllers	Cable Length	Notes on Selection
		I: Incremental * The Simple absolute encoder is also considered type "I."	28P : 28 ☐ size Pulse motor	30 : 1/30 Deceleration ratio	14 :14 mm (7 mm per side)	P3: PCON-CA MSEP-C	N : None P : 1 m S : 3 m M : 5 m X☐☐ : Custom R☐☐ : Robot cable	AC1 : Actuator cable 1 m NM : Non-motor end specification

CE RoHS

POINT Notes on Selection

(1) The maximum opening/closing speed indicates the operating speed on one side. The relative operating speed is twice this value.
(2) The maximum gripping force is the sum of the gripping forces of both fingers, at a gripping point where there is no offset or overhang distance. The work part weight that can be actually moved depends on the friction coefficient between the gripper fingers and the work part, as well as on the shape of the work part. As a rough guide, a work part's weight should not exceed 1/10 to 1/20 of the gripping force. (See page 25 for details.)
(3) The rated acceleration while moving is 0.3 G.

■ Gripping Force vs. Electric Current Limit

The gripping (pushing) force can be adjusted freely within the range of electric current limits of 20% to 70%.

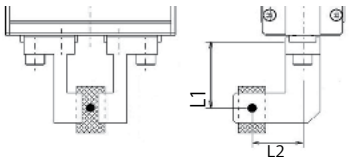

* Operate with the L1 distance under 80 mm.
* The gripping force in the graph below assumes that L1 and L2 the figure above are zero. (Refer to p. 26 for the rough guide gripping force at each distance of L1.) Also note that the gripping force is a sum of gripping forces of both fingers.

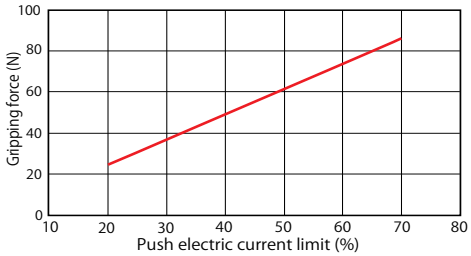

* The gripping force graph above shows the number of references. Please allow margins up to ±15%

* Please note that, when gripping (pushing), the speed is fixed at 5 mm/s.

Actuator Specifications

■ Lead and Payload

Model Number	Deceleration Ratio	Max. Gripping Force (N)	Stroke (mm)
RCP4-GRSML-I-28P-30-14-P3- 1 - 2	30	87 (43.5 per side)	14 (7 per side)

Legend: 1 Cable length 2 Options

■ Stroke and Max. Opening/Closing Speed

Stroke (mm)	Max. Speed (mm/s)
14	94

Cable List

Type	Cable Symbol	
Standard Type	**P** (1m)	
	S (3m)	
	M (5m)	
Special Length	**X06** (6m) ~ **X10** (10m)	
	X11 (11m) ~ **X15** (15m)	
	X16 (16m) ~ **X20** (20m)	
Robot Cable	**R01** (1m) ~ **R03** (3m)	
	R04 (4m) ~ **R05** (5m)	
	R06 (6m) ~ **R10** (10m)	
	R11 (11m) ~ **R15** (15m)	
	R16 (16m) ~ **R20** (20m)	

Actuator Specifications

Item	Description
Drive System	Worm gear + helical gear + helical rack
Positioning Repeatability	±0.01 mm
Backlash per Finger	0.3 mm or less
Lost Motion	0.15 mm or less per side
Guide	Linear guide
Static Load Moment	Ma: 1.9N•m Mb: 2.7N•m Mc: 4.6N•m
Weight	0.5 kg
Ambient Operating Temp./Humidity	0 to 40°C, 85% RH or less (non-condensing)

Option List

Name	Option Code	See Page	
Actuator Cable 1 m	**AC1**	P12	
Non-motor end specification	**NM**	P12	

Dimensions

CAD drawings can be downloaded from the website. www.intelligentactuator.com

2D CAD

*1 This is the maximum range over which the finger operates during home return operation, etc. Be careful not to let the finger contact the customer's finger, any nearby work part, etc.
*2 The actuator cable is a robot cable.
*3 Use all tap holes (4 locations) on the same mounting surface to secure the actuator.
*4 Do not screw in the bolt beyond the depth of the fixing tap hole. The internal parts may be damaged.

* The standard length of the actuator cable is 200 mm. The cable length can be changed to 1000 mm by selecting an applicable option (model: AC1).

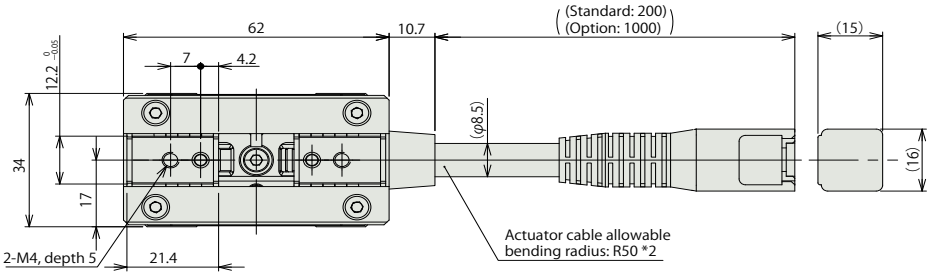

* The standard configuration is that the home is on the open side. If you wish to have the home on the closed side, specify an applicable option (model: NM).

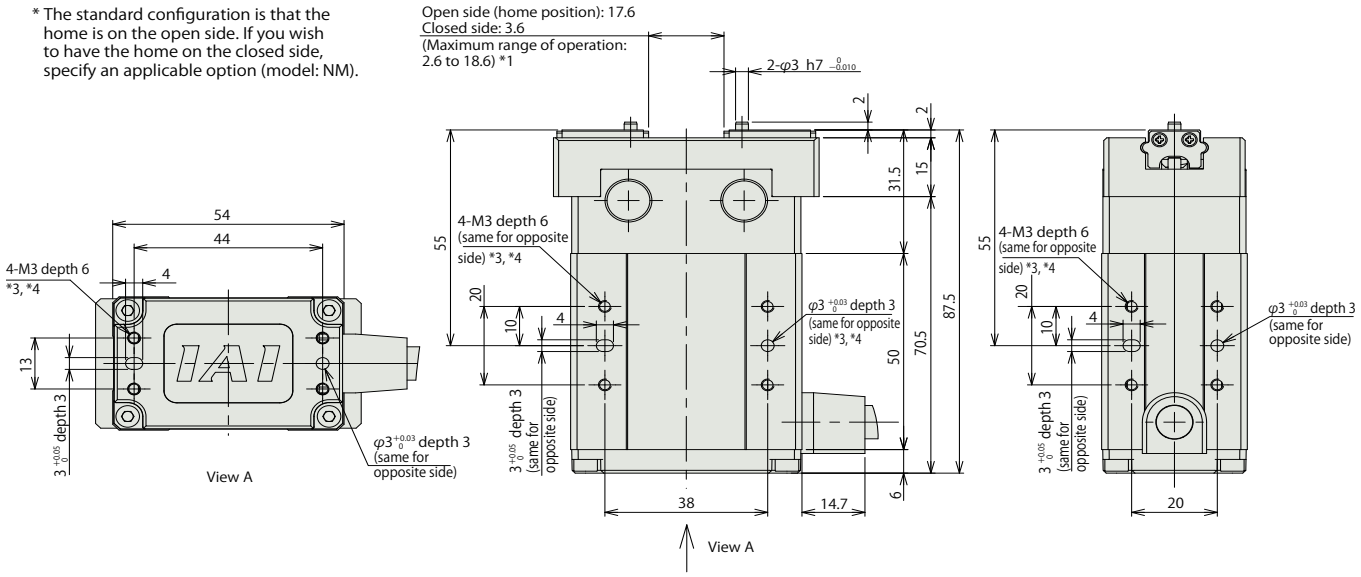

Compatible Controllers

The RCP4 series actuators can operate with the controllers below. Select the controller according to your usage.

Name	External View	Model Number	Description	Max. Pos. Points	Input Voltage	Power Supply Capacity		See Page
Solenoid Valve Multi-axis Type PIO Specification		MSEP-C-③-~-①-2-0	Positioner type based on PIO control, allowing up to 8 axes to be connected	3 points	DC24V	See RoboCylinder General Catalog.		→ P29
Solenoid Valve Multi-axis Type Network Specification		MSEP-C-③-~-④-0-0	Filed network-ready positioner type, allowing up to 8 axes to be connected	256 points				
Positioner Type		PCON-CA-28PI-①-2-0	PIO control ready	512 points		2.2 A max.		
Pulse Train Type		PCON-CA-28PI-PL□-2-0	Pulse-train input ready	—				
Network Type		PCON-CA-28PI-④-0-0	Field network ready	768 points				

* ① indicates I/O type (NP/PN).
* ④ indicates field network specification symbol.
* ③ indicates number of axes (1~8).
* □ indicates N (NPN specification) or P (PNP specification) symbol.

RCP4-GRSLL

RoboCylinder 2-Finger Gripper Vertical Large Slider Type
70 mm Width Pulse Motor

■ Model Description

RCP4	GRSLL	I	35P	30	22	P3	□	□	□
Series	Type	Encoder	Motor	Deceleration	Stroke	Compatible Controllers	Cable Length		Notes on Selection
		I: Incremental * The Simple absolute encoder is also considered type "I."	35P : 35 □ size Pulse motor	30 : 1/30 Deceleration ratio	22 : 22 mm (11 mm per side)	P3: PCON-CA MSEP-C	N : None P : 1 m S : 3 m M : 5 m X □□ : Custom R □□ : Robot cable		AC1 : Actuator cable 1 m NM : Non-motor end specification

CE RoHS

POINT Notes on Selection

(1) The maximum opening/closing speed indicates the operating speed on one side. The relative operating speed is twice this value.
(2) The maximum gripping force is the sum of the gripping forces of both fingers, at a gripping point where there is no offset or overhang distance. The work part weight that can be actually moved depends on the friction coefficient between the gripper fingers and the work part, as well as on the shape of the work part. As a rough guide, a work part's weight should not exceed 1/10 to 1/20 of the gripping force. (See page 25 for details.)
(3) The rated acceleration while moving is 0.3 G.

■ Gripping Force vs. Electric Current Limit

The gripping (pushing) force can be adjusted freely within the range of electric current limits of 20% to 70%.

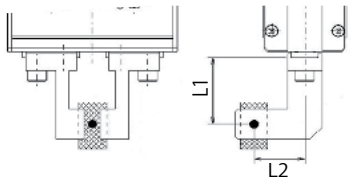

* Operate with the L1 distance under 100 mm.
* The gripping force in the graph below assumes that L1 and L2 the figure above are zero. (Refer to p. 26 for the rough guide gripping force at each distance of L1.) Also note that the gripping force is a sum of gripping forces of both fingers.

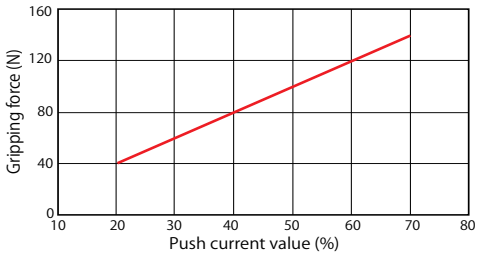

* The gripping force graph above shows the number of references. Please allow margins up to ±15%

* Please note that, when gripping (pushing), the speed is fixed at 5 mm/s.

Actuator Specifications

■ Lead and Payload

Model Number	Deceleration Ratio	Max. Gripping Force (N)	Stroke (mm)
RCP4-GRSLL-I-35P-30-22-P3- 1 - 2	30	140 (70 per side)	22 (11 per side)

Legend: 1 Cable length 2 Options

■ Stroke and Max. Opening/Closing Speed

Stroke (mm)	Max. Speed (mm/s)
22	125

Cable List

Type	Cable Symbol	
Standard Type	**P** (1m)	
	S (3m)	
	M (5m)	
Special Length	**X06** (6m) ~ **X10** (10m)	
	X11 (11m) ~ **X15** (15m)	
	X16 (16m) ~ **X20** (20m)	
Robot Cable	**R01** (1m) ~ **R03** (3m)	
	R04 (4m) ~ **R05** (5m)	
	R06 (6m) ~ **R10** (10m)	
	R11 (11m) ~ **R15** (15m)	
	R16 (16m) ~ **R20** (20m)	

Actuator Specifications

Item	Description
Drive System	Worm gear + helical gear + helical rack
Positioning Repeatability	±0.01 mm
Backlash per Finger	0.4 mm or less
Lost Motion	0.15 mm or less per side
Guide	Linear guide
Static Load Moment	Ma: 3.8N•m Mb: 5.5N•m Mc: 9.5N•m
Weight	1.0 kg
Ambient Operating Temp./Humidity	0 to 40°C, 85% RH or less (non-condensing)

Option List

Name	Option Code	See Page	
Actuator Cable 1 m	**AC1**	P14	
Non-motor end specification	**NM**	P14	

Dimensions

CAD drawings can be downloaded from the website. www.intelligentactuator.com

2D CAD

*1 This is the maximum range over which the finger operates during home return operation, etc. Be careful not to let the finger contact the customer's finger, any nearby work part, etc.
*2 Be careful not to let the finger contact any nearby object or structure as it moves to the dimension in [ ] during home return.
*3 The actuator cable is a robot cable.
*4 Use all tap holes (4 locations) on the same mounting surface to secure the actuator.
*5 Do not screw in the bolt beyond the depth of the fixing tap hole. The internal parts may be damaged.

* The standard length of the actuator cable is 200 mm. The cable length can be changed to 1000 mm by selecting an applicable option (model: AC1).

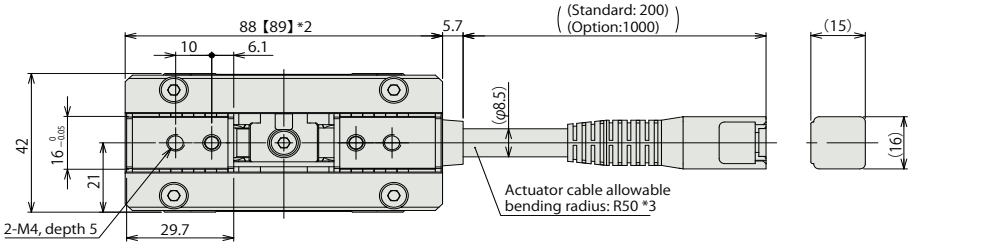

* The standard configuration is that the home is on the open side. If you wish to have the home on the closed side, specify an applicable option (model: NM).

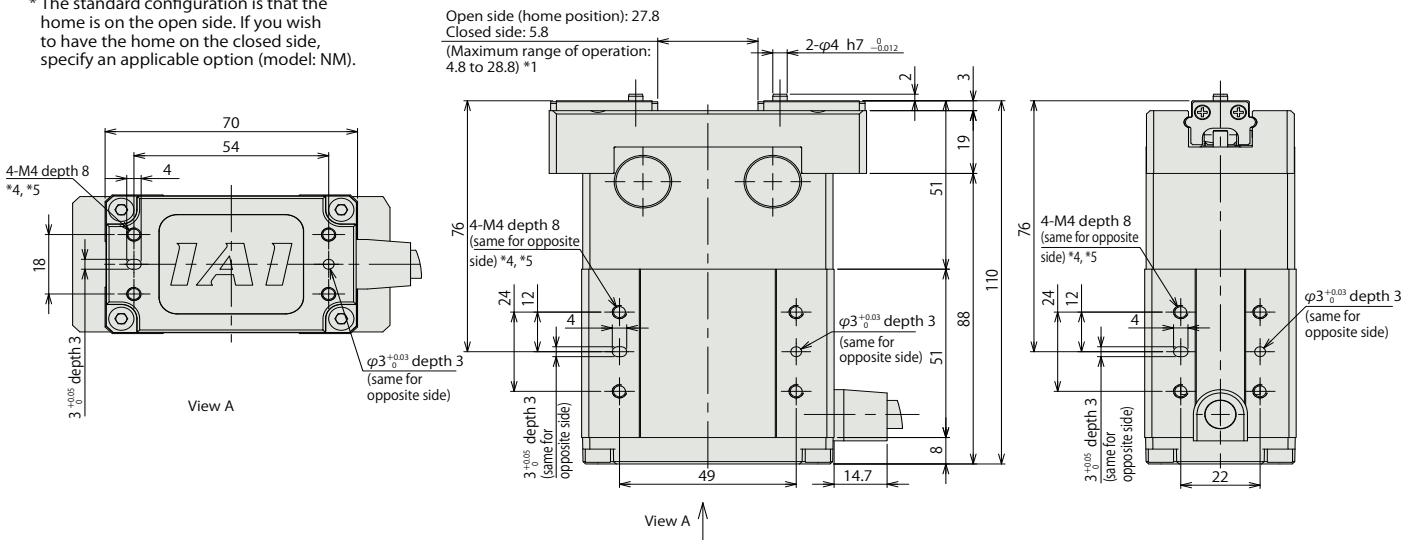

Compatible Controllers

The RCP4 series actuators can operate with the controllers below. Select the controller according to your usage.

Name	External View	Model Number	Description	Max. Pos. Points	Input Voltage	Power Supply Capacity		See Page
Solenoid Valve Multi-axis Type PIO Specification		MSEP-C- ③ -~- ① -2-0	Positioner type based on PIO control, allowing up to 8 axes to be connected	3 points	DC24V	See RoboCylinder General Catalog.		→ P29
Solenoid Valve Multi-axis Type Network Specification		MSEP-C- ③ -~- ④ -0-0	Filed network-ready positioner type, allowing up to 8 axes to be connected	256 points				
Positioner Type		PCON-CA-35PI- ① -2-0	PIO control ready	512 points		2.2 A max.		
Pulse Train Type		PCON-CA-35PI-PL□-2-0	Pulse-train input ready	—				
Network Type		PCON-CA-35PI- ④ -0-0	Field network ready	768 points				

* ① indicates I/O type (NP/PN).
* ③ indicates number of axes (1~8).
* ④ indicates field network specification symbol.
* □ indicates N (NPN specification) or P (PNP specification) symbol.

RCP4-GRSWL

RoboCylinder 2-Finger Gripper Vertical Extra Large Slider Type
80 mm Width Pulse Motor

■ Model Description

RCP4	GRSWL	I	42P	28	30	P3	☐	☐
Series	Type	Encoder	Motor	Deceleration	Stroke	Compatible Controllers	Cable Length	Notes on Selection
		I: Incremental * The Simple absolute encoder is also considered type "I."	42P : 42 ☐ size Pulse motor	28 : 1/28 Deceleration ratio	30 : 30 mm (15 mm per side)	P3: PCON-CA MSEP-C	N : None P : 1 m S : 3 m M : 5 m X ☐☐ : Custom R ☐☐ : Robot cable	AC1 : Actuator cable 1 m NM : Non-motor end specification

CE RoHS

POINT Notes on Selection

(1) The maximum opening/closing speed indicates the operating speed on one side. The relative operating speed is twice this value.
(2) The maximum gripping force is the sum of the gripping forces of both fingers, at a gripping point where there is no offset or overhang distance. The work part weight that can be actually moved depends on the friction coefficient between the gripper fingers and the work part, as well as on the shape of the work part. As a rough guide, a work part's weight should not exceed 1/10 to 1/20 of the gripping force. (See page 25 for details.)
(3) The rated acceleration while moving is 0.3 G.

■ Gripping Force vs. Electric Current Limit

The gripping (pushing) force can be adjusted freely within the range of electric current limits of 20% to 70%.

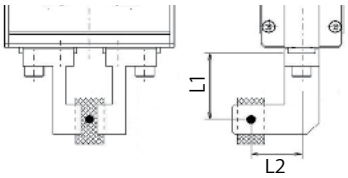

* Operate with the L1 distance under 100 mm.
* The gripping force in the graph below assumes that L1 and L2 the figure above are zero. (Refer to p. 26 for the rough guide gripping force at each distance of L1.) Also note that the gripping force is a sum of gripping forces of both fingers.

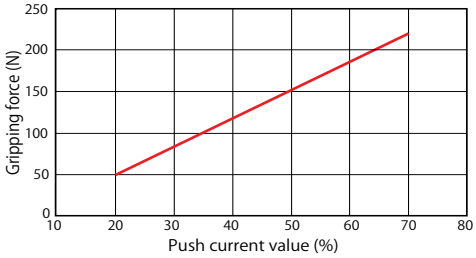

* The gripping force graph above shows the number of references. Please allow margins up to ±15%

* Please note that, when gripping (pushing), the speed is fixed at 5 mm/s.

Actuator Specifications

■ Lead and Payload

Model Number	Deceleration Ratio	Max. Gripping Force (N)	Stroke (mm)
RCP4-GRSWL-I-42P-28-30-P3- 1 - 2	28	220 (110 per side)	30 (15 per side)

Legend: 1 Cable length 2 Options

■ Stroke and Max. Opening/Closing Speed

Stroke (mm)	Max. Speed (mm/s)
30	157

Cable List

Type	Cable Symbol	
Standard Type	**P** (1m)	
	S (3m)	
	M (5m)	
Special Length	**X06** (6m) ~ **X10** (10m)	
	X11 (11m) ~ **X15** (15m)	
	X16 (16m) ~ **X20** (20m)	
Robot Cable	**R01** (1m) ~ **R03** (3m)	
	R04 (4m) ~ **R05** (5m)	
	R06 (6m) ~ **R10** (10m)	
	R11 (11m) ~ **R15** (15m)	
	R16 (16m) ~ **R20** (20m)	

Actuator Specifications

Item	Description
Drive System	Worm gear + helical gear + helical rack
Positioning Repeatability	±0.01 mm
Backlash per Finger	0.4 mm or less
Lost Motion	0.15 mm or less per side
Guide	Linear guide
Static Load Moment	Ma: 5.1N•m Mb: 7.2N•m Mc: 12.4N•m
Weight	1.6 kg
Ambient Operating Temp./Humidity	0 to 40°C, 85% RH or less (non-condensing)

Option List

Name	Option Code	See Page	
Actuator Cable 1 m	**AC1**	P16	
Non-motor end specification	**NM**	P16	

Dimensions

CAD drawings can be downloaded from the website. www.intelligentactuator.com

2D CAD

*1 This is the maximum range over which the finger operates during home return operation, etc. Be careful not to let the finger contact the customer's finger, any nearby work part, etc.
*2 Be careful not to let the finger contact any nearby object or structure as it moves to the dimension in [ ] during home return.
*3 The actuator cable is a robot cable.
*4 Use all tap holes (4 locations) on the same mounting surface to secure the actuator.
*5 Do not screw in the bolt beyond the depth of the fixing tap hole. The internal parts may be damaged.

* The standard length of the actuator cable is 200 mm. The cable length can be changed to 1000 mm by selecting an applicable option (model: AC1).

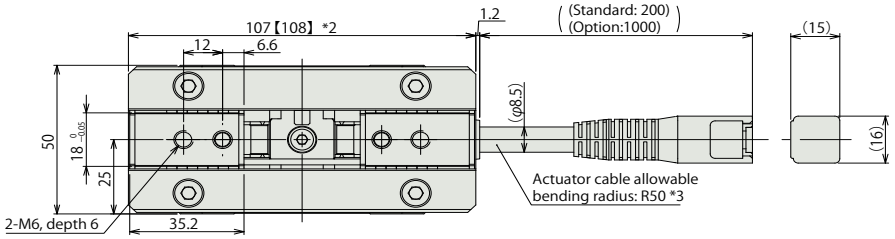

* The standard configuration is that the home is on the open side. If you wish to have the home on the closed side, specify an applicable option (model: NM).

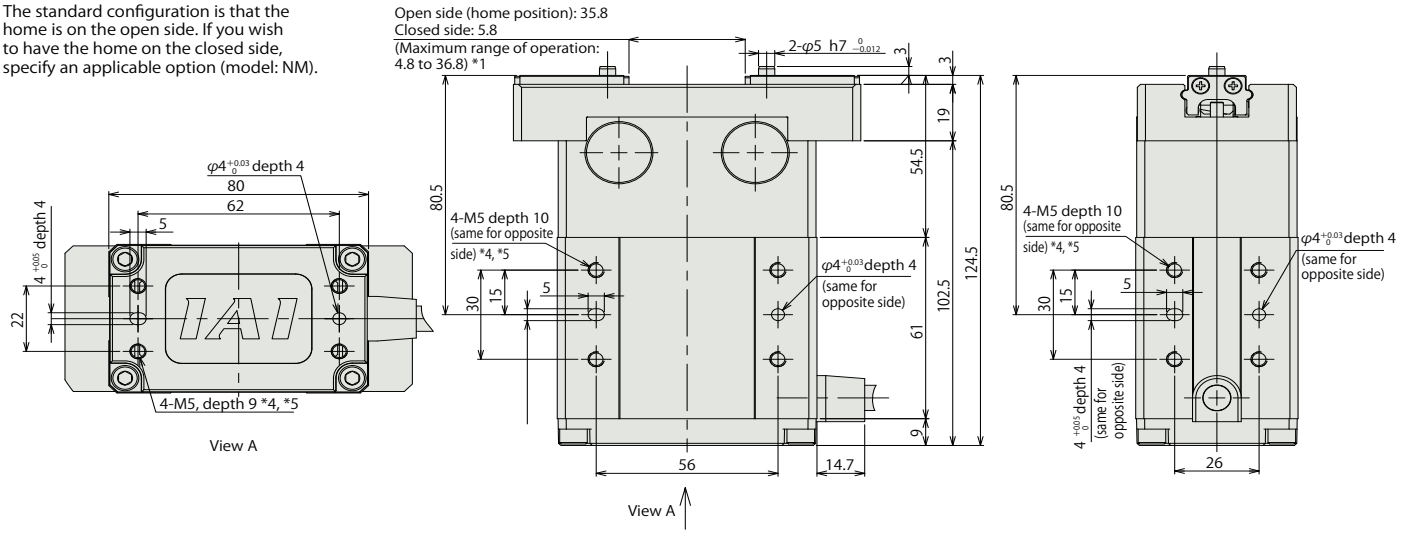

Compatible Controllers

The RCP4 series actuators can operate with the controllers below. Select the controller according to your usage.

Name	External View	Model Number	Description	Max. Pos. Points	Input Voltage	Power Supply Capacity		See Page
Solenoid Valve Multi-axis Type PIO Specification		MSEP-C- ③ -~- ① -2-0	Positioner type based on PIO control, allowing up to 8 axes to be connected	3 points	DC24V	See RoboCylinder General Catalog.		→ P29
Solenoid Valve Multi-axis Type Network Specification		MSEP-C- ③ -~- ④ -0-0	Filed network-ready positioner type, allowing up to 8 axes to be connected	256 points				
Positioner Type		PCON-CA-42PI- ① -2-0	PIO control ready	512 points		2.2 A max.		
Pulse Train Type		PCON-CA-42PI-PL□-2-0	Pulse-train input ready	—				
Network Type		PCON-CA-42PI- ④ - 0-0	Field network ready	768 points				

* ① indicates I/O type (NP/PN).
* ③ indicates number of axes (1~8).
* ④ indicates field network specification symbol.
* □ indicates N (NPN specification) or P (PNP specification) symbol.

RCP2-GRLS

RoboCylinder 2-Finger Gripper Vertical Small Lever Type
42 mm Width Pulse Motor

■ Model Description

RCP2 – **GRLS** – **I** – **20P** – **30** – **180** – □ – □ – □

Series	Type	Encoder	Motor	Deceleration	Stroke	Compatible Controllers	Cable Length	Option
		I: Incremental * The Simple absolute encoder is also considered type "I."	20P : 20 □ size Pulse motor	30 : 1/30 Deceleration ratio	180:180 degree (90 degree per side)	P1:PCON-PL/PO/SE PSEL RPCON P3:PCON-CA PMEC/PSEP MSEP	N : None P : 1m S : 3m M : 5m X□□ : Custom	NM : Non-motor end specification FB : Flange bracket SB : Shaft bracket

CE RoHS

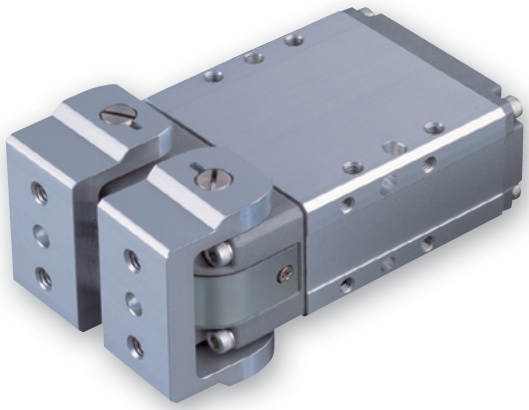

POINT Notes on Selection

(1) The maximum opening/closing speed indicates the operating speed on one side. The relative operating speed is twice this value.

(2) The maximum gripping force is the sum of the gripping forces of both fingers, at a gripping point where there is no offset or overhang distance. The work part weight that can be actually moved depends on the friction coefficient between the gripper fingers and the work part, as well as on the shape of the work part. As a rough guide, a work part's weight should not exceed 1/10 to 1/20 of the gripping force. (See page 27 for details.)

(3) The rated acceleration while moving is 0.3 G.

■ Gripping Force vs. Electric Current Limit

The gripping (pushing) force can be adjusted freely within the range of electric current limits of 20% to 70%.

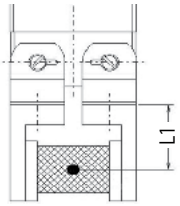

* The gripping force of the graph below is measured on the top face of the lever. The actual gripping force drops in inverse proportion to the distance from the opening/closing fulcrum. Calculate the effective gripping force using the formula below.
* Operate with the L1 distance under 40 mm.

Effective gripping force (GRLS) = F x 15.5/ (L1 + 15.5)

* In the graph below, the gripping force value is the sum of gripping forces of both fingers.

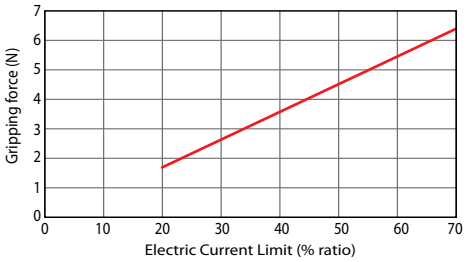

* The gripping force graph above shows the number of references. Please allow margins up to ± 15%.

* Please note that, when gripping (pushing), the speed is fixed at 5 deg/s.

Actuator Specifications

■ Lead and Payload

Model Number	Deceleration Ratio	Max. Gripping Force (N)	Stroke (degree)
RCP2-GRLS-I-20P-30-180- 1 - 2 - 3	30	6.4 (3.2 per side)	180 (90 per side)

Legend: 1 Compatible controllers 2 Cable length 3 Options

■ Stroke and Max. Opening/Closing Speed

Deceleration Ratio \ Stroke	180 (degree)
30	600 (per side)

(Unit: deg/s)

Cable List

Type	Cable Symbol	
Standard Type (Robot cable)	**P** (1m)	
	S (3m)	
	M (5m)	
Special Length	**X06** (6m) ~ **X10** (10m)	
	X11 (11m) ~ **X15** (15m)	
	X16 (16m) ~ **X20** (20m)	

* The standard cable is the motor-encoder integrated robot cable.

Actuator Specifications

Item	Description
Drive System	Worm gear + helical gear
Positioning Repeatability	±0.01 degree
Backlash	1.0 degree or less per side (constantly pressed out by a spring)
Lost Motion	0.1 degree or less per side
Guide	–
Allowable Static Load Moment	–
Weight	0.2 kg
Ambient Operating Temp./Humidity	0 to 40°C, 85% RH or less (non-condensing)

Option List

Name	Option Code	See Page	
Non-motor end specification	**NM**	P 18	
Flange bracket	**FB**	–	
Shaft bracket	**SB**	–	

Dimensions

CAD drawings can be downloaded from the website. www.intelligentactuator.com

2D CAD

* The opening side of the slider is the home position.
*1 The motor-encoder cable is connected here.
*2 Use all tap holes (4 locations) on the same mounting surface to secure the actuator.
*3 Do not screw in the bolt beyond the depth of the fixing tap hole. The internal parts may be damaged.
*4 The actuator cable is not a robot cable, so secure the cable while the actuator is in use.

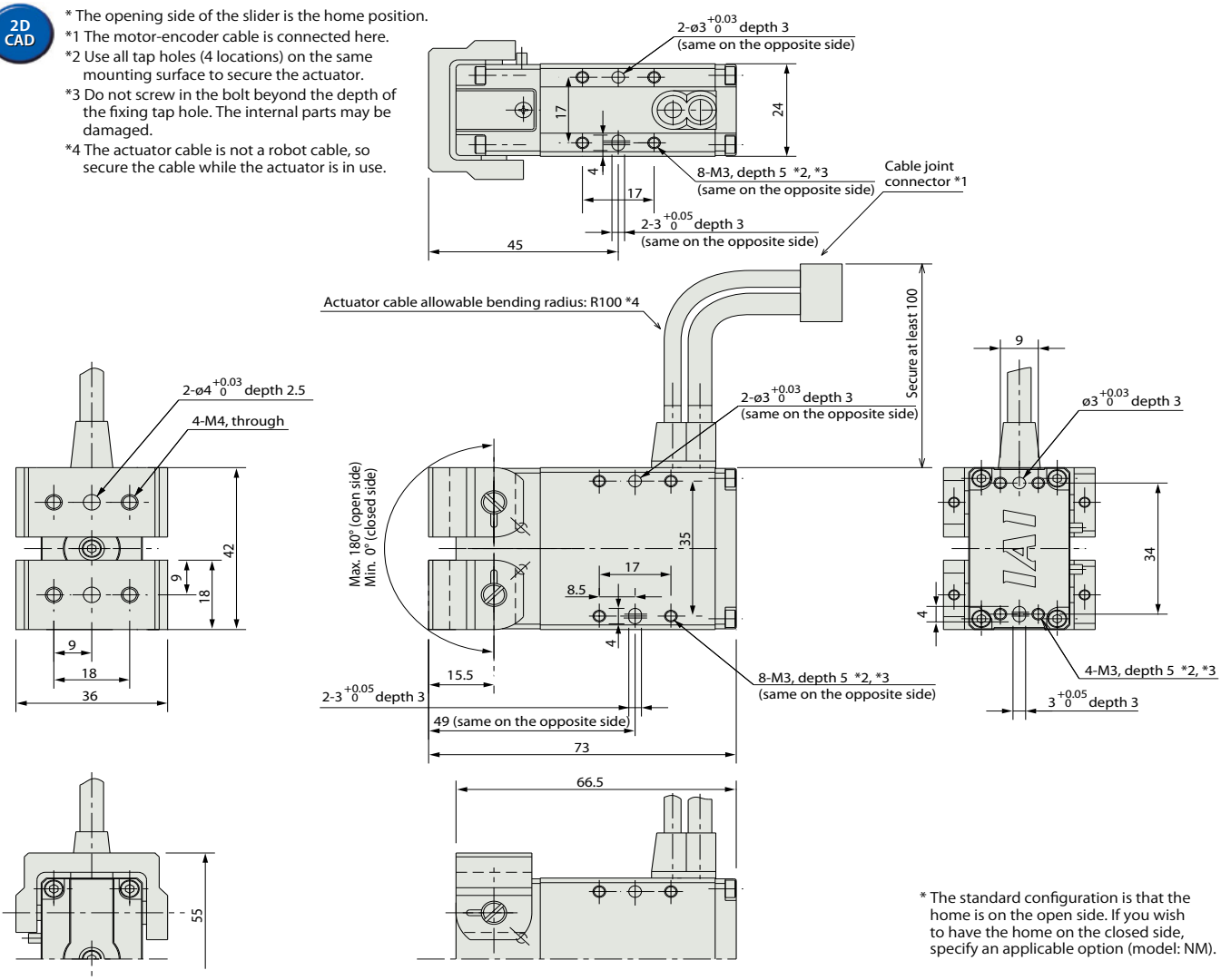

* The standard configuration is that the home is on the open side. If you wish to have the home on the closed side, specify an applicable option (model: NM).

Compatible Controllers

The RCP2 series actuators can operate with the controllers below. Select the controller according to your usage.

Name	External View	Model Number	Description	Max. Pos. Points	Input Voltage	Power Supply Capacity		See Page
Solenoid Valve Multi-axis Type PIO Specification		MSEP-C-③-~-①-2-0	Positioner type based on PIO control, allowing up to 8 axes to be connected	3 points	DC24V	See RoboCylinder General Catalog.		→ P29
Solenoid Valve Multi-axis Type Network Specification		MSEP-C-③-~-④-0-0	Filed network-ready positioner type, allowing up to 8 axes to be connected	256 points				
Positioner Type		PCON-CA-20PI-①-2-0	PIO control ready	512 points		1A max.		
Pulse Train Type		PCON-CA-20PI-PL□-2-0	Pulse-train input ready	—				
Network Type		PCON-CA-20PI-④-0-0	Field network ready	768 points				
Pulse Train Type (Differential Line Driver Specification)		PCON-PL-20PI-①-2-0	Differential line driver ready	—		See RoboCylinder General Catalog.		See RoboCylinder General Catalog.
Pulse Train Type (Open Collector Specification)		PCON-PO-20PI-①-2-0	Open collector ready					
Serial Communication Type		PCON-SE-20PI-N-0-0	Dedicated serial communication type	64 points				
Program Control Type		PSEL-CS-1-20PI-①-2-0	Program operation is possible. Operation is possible up to 2 axes.	1500 points				

* This is for the single-axis PSEL.
*③ indicates number of axes (1~8).
* ① indicates I/O type (NP/PN).
* ④ indicates field network specification symbol.
* □ indicates N (NPN specification) or P (PNP specification) symbol.

RCP4-GRLM

RoboCylinder 2-Finger Gripper Vertical Medium Lever Type
54 mm Width Pulse Motor

■ Model Description

RCP4 — **GRLM** — **I** — **28P** — **30** — **180** — **P3** — ☐ — ☐

Series	Type	Encoder	Motor	Deceleration	Stroke	Compatible Controllers	Cable Length	Option
		I: Incremental * The Simple absolute encoder is also considered type "I."	28P : 28 ☐ size Pulse motor	30 : 1/30 Deceleration ratio	180 :180 degree (90 degree per side)	P3: PCON-CA MSEP-C	N : None P : 1 m S : 3 m M : 5 m X ☐☐ : Custom R ☐☐ : Robot cable	AC1 : Actuator cable 1 m NM : Non-motor end specification

CE RoHS

POINT Notes on Selection

(1) The maximum opening/closing speed indicates the operating speed on one side. The relative operating speed is twice this value.
(2) The maximum gripping force is the sum of the gripping forces of both fingers, at a gripping point where there is no offset or overhang distance. The work part weight that can be actually moved depends on the friction coefficient between the gripper fingers and the work part, as well as on the shape of the work part. As a rough guide, a work part's weight should not exceed 1/10 to 1/20 of the gripping force. (See page A-27 for details.)
(3) The rated acceleration while moving is 0.3 G.

■ Gripping Force vs. Electric Current Limit

The gripping (pushing) force can be adjusted freely within the range of electric current limits of 20% to 70%.

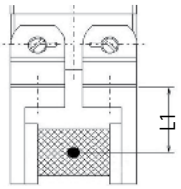

* The gripping force of the graph below is measured on the top face of the lever. The actual gripping force drops in inverse proportion to the distance from the opening/closing fulcrum. Calculate the effective gripping force using the formula below.
* Operate with the L1 distance under 100 mm.

Effective gripping force (GRLM) = F x 20 / (L1 + 20)

* In the graph below, the gripping force value is the sum of gripping forces of both fingers.

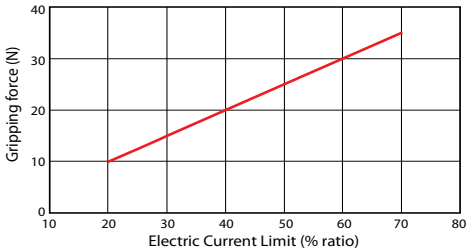

* The gripping force graph above shows the number of references. Please allow margins up to ± 15%.

* Please note that, when gripping (pushing), the speed is fixed at 5 deg/s.

Actuator Specifications

■ Lead and Payload

Model Number	Deceleration Ratio	Max. Gripping Force (N)	Stroke (degree)
RCP4-GRLM-I-28P-30-180-P3-[1] - [2]	30	35 (17.5 per side)	180 (90 per side)

Legend: [1] Cable length [2] Options

■ Stroke and Max. Opening/Closing Speed

Stroke (degree)	Max. Speed (degree/s)
180	600

Cable List

Type	Cable Symbol	
Standard Type	**P** (1m)	
	S (3m)	
	M (5m)	
Special Length	**X06** (6m) ~ **X10** (10m)	
	X11 (11m) ~ **X15** (15m)	
	X16 (16m) ~ **X20** (20m)	
Robot Cable	**R01** (1m) ~ **R03** (3m)	
	R04 (4m) ~ **R05** (5m)	
	R06 (6m) ~ **R10** (10m)	
	R11 (11m) ~ **R15** (15m)	
	R16 (16m) ~ **R20** (20m)	

Actuator Specifications

Item	Description
Drive System	Worm gear + helical gear
Positioning Repeatability	±0.05 degree
Backlash per Finger	2.5 degree or less
Lost Motion	0.3 degree or less per side
Guide	–
Static Load Moment	–
Weight	0.5 kg
Ambient Operating Temp./Humidity	0 to 40°C, 85% RH or less (non-condensing)

Option List

Name	Option Code	See Page	
Actuator Cable 1 m	**AC1**	P 20	
Non-motor end specification	**NM**	P 20	

Dimensions

CAD drawings can be downloaded from the website. www.intelligentactuator.com

2D CAD

*1 This is the maximum range over which the finger operates during home return operation, etc. Be careful not to let the finger contact the customer's finger, any nearby work part, etc.
*2 The actuator cable is a robot cable.
*3 Use all tap holes (4 locations) on the same mounting surface to secure the actuator.
*4 Do not screw in the bolt beyond the depth of the fixing tap hole. The internal parts may be damaged.

* The standard length of the actuator cable is 200 mm. The cable length can be changed to 1000 mm by selecting an applicable option (model: AC1).

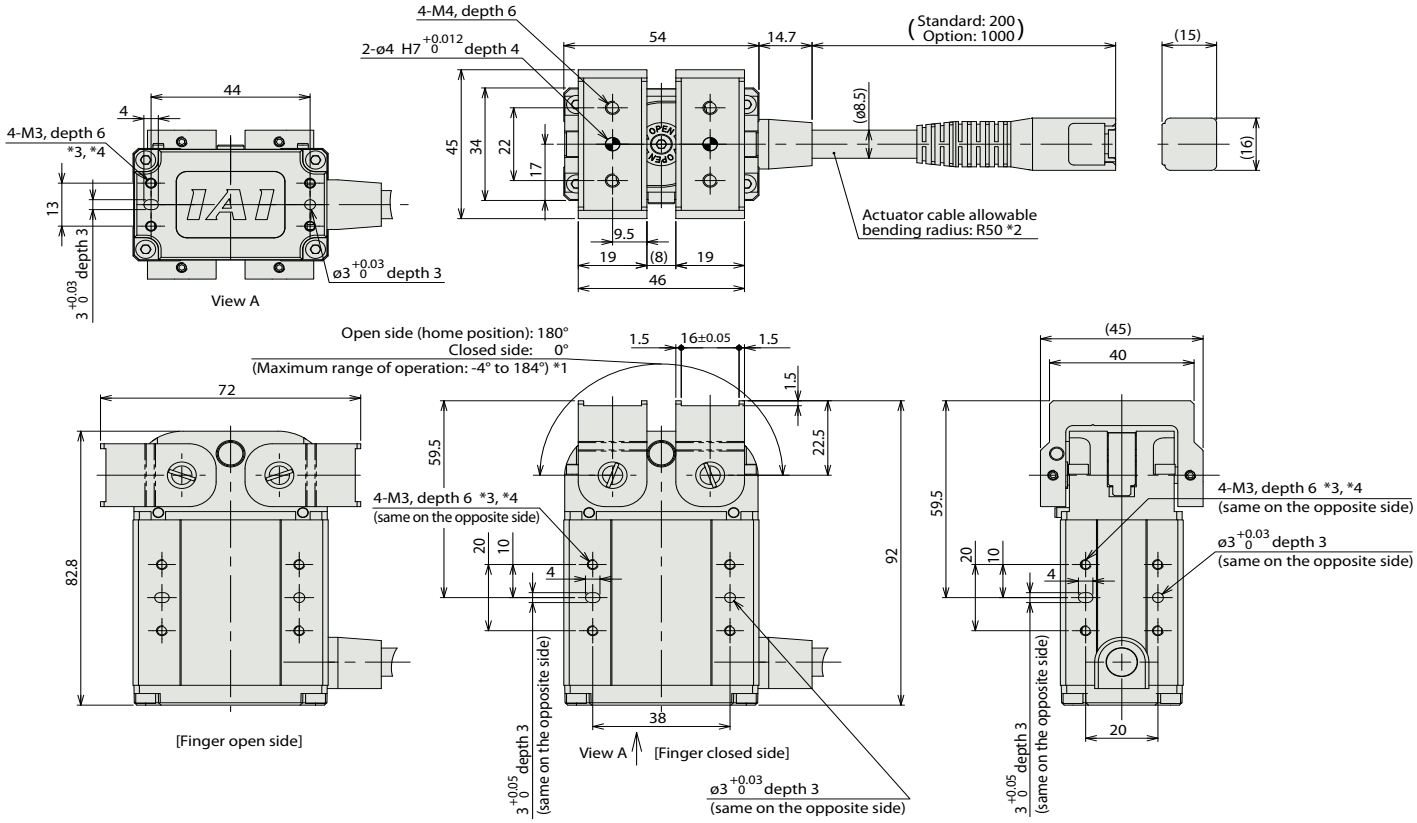

* The standard configuration is that the home is on the open side. If you wish to have the home on the closed side, specify an applicable option (model: NM).

Compatible Controllers

The RCP4 series actuators can operate with the controllers below. Select the controller according to your usage.

Name	External View	Model Number	Description	Max. Pos. Points	Input Voltage	Power Supply Capacity		See Page
Solenoid Valve Multi-axis Type PIO Specification		MSEP-C- ③ -~- ① -2-0	Positioner type based on PIO control, allowing up to 8 axes to be connected	3 points	DC24V	See RoboCylinder General Catalog.		→ P29
Solenoid Valve Multi-axis Type Network Specification		MSEP-C- ③ -~- ④ -0-0	Filed network-ready positioner type, allowing up to 8 axes to be connected	256 points				
Positioner Type		PCON-CA-28PI- ① -2-0	PIO control ready	512 points		2.2 A max.		
Pulse Train Type		PCON-CA-28PI-PL□-2-0	Pulse-train input ready	—				
Network Type		PCON-CA-28PI- ④ - 0-0	Field network ready	768 points				

* ① indicates I/O type (NP/PN).
* ③ indicates number of axes (1~8).
* ④ indicates field network specification symbol.
* □ indicates N (NPN specification) or P (PNP specification) symbol.

RCP4-GRLL

RoboCylinder 2-Finger Gripper Vertical Large Lever Type
70 mm Width Pulse Motor

■ Model Description

RCP4	GRLL	I	35P	30	180	P3	□	□
Series	Type	Encoder	Motor	Deceleration	Stroke	Compatible Controllers	Cable Length	Option
		I: Incremental * The Simple absolute encoder is also considered type "I."	35P : 35 □ size Pulse motor	30 : 1/30 Deceleration ratio	180 :180 degree (90 degree per side)	P3: PCON-CA MSEP-C	N : None P : 1 m S : 3 m M : 5 m X □□ : Custom R □□ : Robot cable	AC1 : Actuator cable 1 m NM : Non-motor end specification

CE RoHS

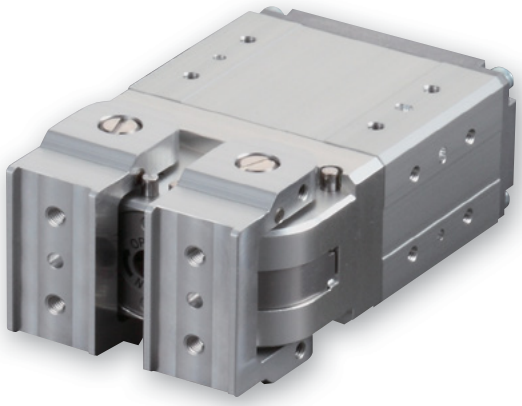

POINT Notes on Selection

(1) The maximum opening/closing speed indicates the operating speed on one side. The relative operating speed is twice this value.
(2) The maximum gripping force is the sum of the gripping forces of both fingers, at a gripping point where there is no offset or overhang distance. The work part weight that can be actually moved depends on the friction coefficient between the gripper fingers and the work part, as well as on the shape of the work part. As a rough guide, a work part's weight should not exceed 1/10 to 1/20 of the gripping force. (See page A-27 for details.)
(3) The rated acceleration while moving is 0.3 G.

■ Gripping Force vs. Electric Current Limit

The gripping (pushing) force can be adjusted freely within the range of electric current limits of 20% to 70%.

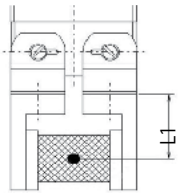

* The gripping force of the graph below is measured on the top face of the lever. The actual gripping force drops in inverse proportion to the distance from the opening/closing fulcrum. Calculate the effective gripping force using the formula below.
* Operate with the L1 distance under 100 mm.

Effective gripping force (GRLL) = F x 26 / (L1 + 26)

* In the graph below, the gripping force value is the sum of gripping forces of both fingers.

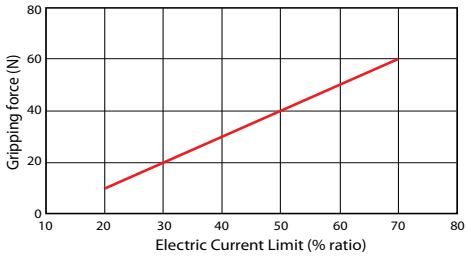

* The gripping force graph above shows the number of references. Please allow margins up to ± 15%.

* Please note that, when gripping (pushing), the speed is fixed at 5 deg/s.

Actuator Specifications

■ Lead and Payload

Model Number	Deceleration Ratio	Max. Gripping Force (N)	Stroke (degree)
RCP4-GRLL-I-35P-30-180-P3- 1 - 2	30	60 (30 per side)	180 (90 per side)

Legend: 1 Cable length 2 Options

■ Stroke and Max. Opening/Closing Speed

Stroke (degree)	Max. Speed (degree/s)
180	600

Cable List

Type	Cable Symbol	
Standard Type	**P** (1m)	
	S (3m)	
	M (5m)	
Special Length	**X06** (6m) ~ **X10** (10m)	
	X11 (11m) ~ **X15** (15m)	
	X16 (16m) ~ **X20** (20m)	
Robot Cable	**R01** (1m) ~ **R03** (3m)	
	R04 (4m) ~ **R05** (5m)	
	R06 (6m) ~ **R10** (10m)	
	R11 (11m) ~ **R15** (15m)	
	R16 (16m) ~ **R20** (20m)	

Actuator Specifications

Item	Description
Drive System	Worm gear + helical gear
Positioning Repeatability	±0.05 degree
Backlash per Finger	2.5 degree or less
Lost Motion	0.3 degree or less per side
Guide	–
Static Load Moment	–
Weight	1.0. kg
Ambient Operating Temp./Humidity	0 to 40°C, 85% RH or less (non-condensing)

Option List

Name	Option Code	See Page	
Actuator Cable 1 m	**AC1**	P 22	
Non-motor end specification	**NM**	P 22	

Dimensions

CAD drawings can be downloaded from the website. www.intelligentactuator.com

2D CAD

*1 This is the maximum range over which the finger operates during home return operation, etc. Be careful not to let the finger contact the customer's finger, any nearby work part, etc.
*2 The actuator cable is a robot cable.
*3 Use all tap holes (4 locations) on the same mounting surface to secure the actuator.
*4 Do not screw in the bolt beyond the depth of the fixing tap hole. The internal parts may be damaged.

* The standard length of the actuator cable is 200 mm. The cable length can be changed to 1000 mm by selecting an applicable option (model: AC1).

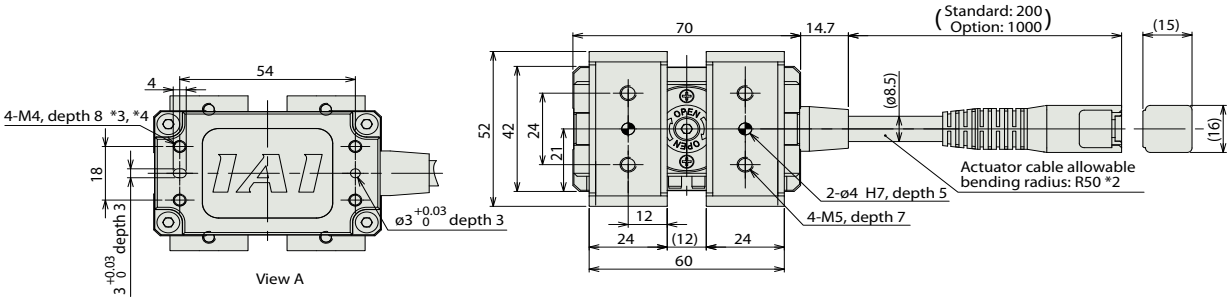

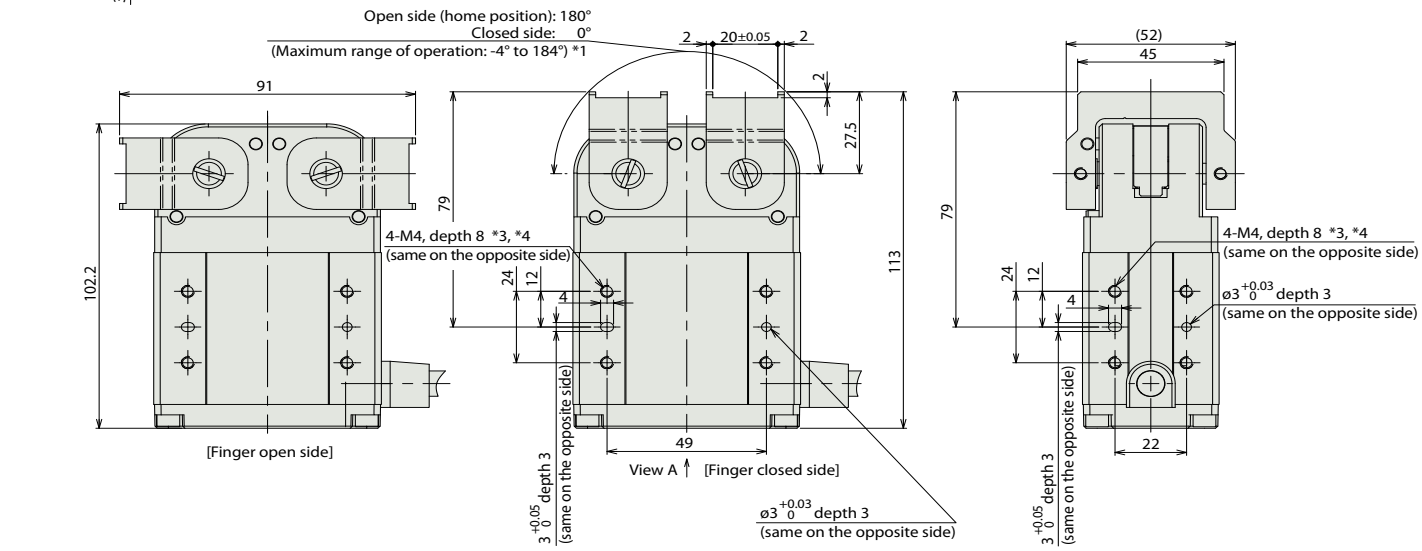

* The standard configuration is that the home is on the open side. If you wish to have the home on the closed side, specify an applicable option (model: NM).

Compatible Controllers

The RCP4 series actuators can operate with the controllers below. Select the controller according to your usage.

Name	External View	Model Number	Description	Max. Pos. Points	Input Voltage	Power Supply Capacity		See Page
Solenoid Valve Multi-axis Type PIO Specification		MSEP-C- ③ -~- ① -2-0	Positioner type based on PIO control, allowing up to 8 axes to be connected	3 points	DC24V	See RoboCylinder General Catalog.		→ P29
Solenoid Valve Multi-axis Type Network Specification		MSEP-C- ③ -~- ④ -0-0	Filed network-ready positioner type, allowing up to 8 axes to be connected	256 points				
Positioner Type		PCON-CA-35PI- ① -2-0	PIO control ready	512 points		2.2 A max.		
Pulse Train Type		PCON-CA-35PI-PL□-2-0	Pulse-train input ready	—				
Network Type		PCON-CA-35PI- ④ - 0-0	Filed network ready	768 points				

* ① indicates I/O type (NP/PN).
* ③ indicates number of axes (1~8).
* ④ indicates field network specification symbol.
* □ indicates N (NPN specification) or P (PNP specification) symbol.

RCP4-GRLW

RoboCylinder 2-Finger Gripper Vertical Extra Large Lever Type
80 mm Width Pulse Motor

■ Model Description

RCP4 — **GRLW** — **I** — **42P** — **28** — **180** — **P3** — [ ] — [ ]

Series	Type	Encoder	Motor	Deceleration	Stroke	Compatible Controllers	Cable Length	Option
		I: Incremental * The Simple absolute encoder is also considered type "I."	42P : 42 □ size Pulse motor	28 : 1/28 Deceleration ratio	180 :180 degree (90 degree per side)	P3: PCON-CA MSEP-C	N : None P : 1 m S : 3 m M : 5 m X □□ : Custom R □□ : Robot cable	AC1 : Actuator cable 1 m NM : Non-motor end specification

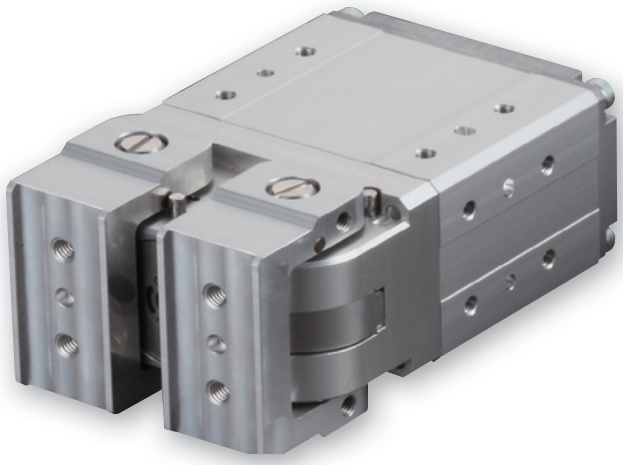

POINT Notes on Selection

(1) The maximum opening/closing speed indicates the operating speed on one side. The relative operating speed is twice this value.
(2) The maximum gripping force is the sum of the gripping forces of both fingers, at a gripping point where there is no offset or overhang distance. The work part weight that can be actually moved depends on the friction coefficient between the gripper fingers and the work part, as well as on the shape of the work part. As a rough guide, a work part's weight should not exceed 1/10 to 1/20 of the gripping force. (See page A-27 for details.)
(3) The rated acceleration while moving is 0.3 G.

■ Gripping Force vs. Electric Current Limit

The gripping (pushing) force can be adjusted freely within the range of electric current limits of 20% to 70%.

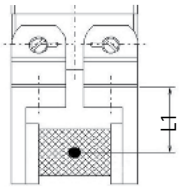

* The gripping force of the graph below is measured on the top face of the lever. The actual gripping force drops in inverse proportion to the distance from the opening/closing fulcrum. Calculate the effective gripping force using the formula below.
* Operate with the L1 distance under 100 mm.

Effective gripping force (GRLW) = F x 30 / (L1 + 30)

* In the graph below, the gripping force value is the sum of gripping forces of both fingers.

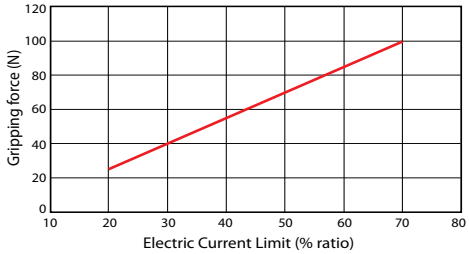

* The gripping force graph above shows the number of references. Please allow margins up to ± 15%.

* Please note that, when gripping (pushing), the speed is fixed at 5 deg/s.

Actuator Specifications

■ Lead and Payload

Model Number	Deceleration Ratio	Max. Gripping Force (N)	Stroke (degree)
RCP4-GRLW-I-42P-28-180-P3- [1] - [2]	28	90 (45 per side)	180 (90 per side)

Legend: [1] Cable length [2] Options

■ Stroke and Max. Opening/Closing Speed

Stroke (degree)	Max. Speed (degree/s)
180	643

Cable List

Type	Cable Symbol	
Standard Type	**P** (1m)	
	S (3m)	
	M (5m)	
Special Length	**X06** (6m) ~ **X10** (10m)	
	X11 (11m) ~ **X15** (15m)	
	X16 (16m) ~ **X20** (20m)	
Robot Cable	**R01** (1m) ~ **R03** (3m)	
	R04 (4m) ~ **R05** (5m)	
	R06 (6m) ~ **R10** (10m)	
	R11 (11m) ~ **R15** (15m)	
	R16 (16m) ~ **R20** (20m)	

Actuator Specifications

Item	Description
Drive System	Worm gear + helical gear
Positioning Repeatability	±0.05 degree
Backlash per Finger	2.5 degree or less
Lost Motion	0.3 degree or less per side
Guide	–
Static Load Moment	–
Weight	1.4 kg
Ambient Operating Temp./Humidity	0 to 40°C, 85% RH or less (non-condensing)

Option List

Name	Option Code	See Page	
Actuator Cable 1 m	**AC1**	P 24	
Non-motor end specification	**NM**	P 24	

Dimensions

CAD drawings can be downloaded from the website. www.intelligentactuator.com

2D CAD

*1 This is the maximum range over which the finger operates during home return operation, etc. Be careful not to let the finger contact the customer's finger, any nearby work part, etc.
*2 The actuator cable is a robot cable.
*3 Use all tap holes (4 locations) on the same mounting surface to secure the actuator.
*4 Do not screw in the bolt beyond the depth of the fixing tap hole. The internal parts may be damaged.

* The standard length of the actuator cable is 200 mm. The cable length can be changed to 1000 mm by selecting an applicable option (model: AC1).

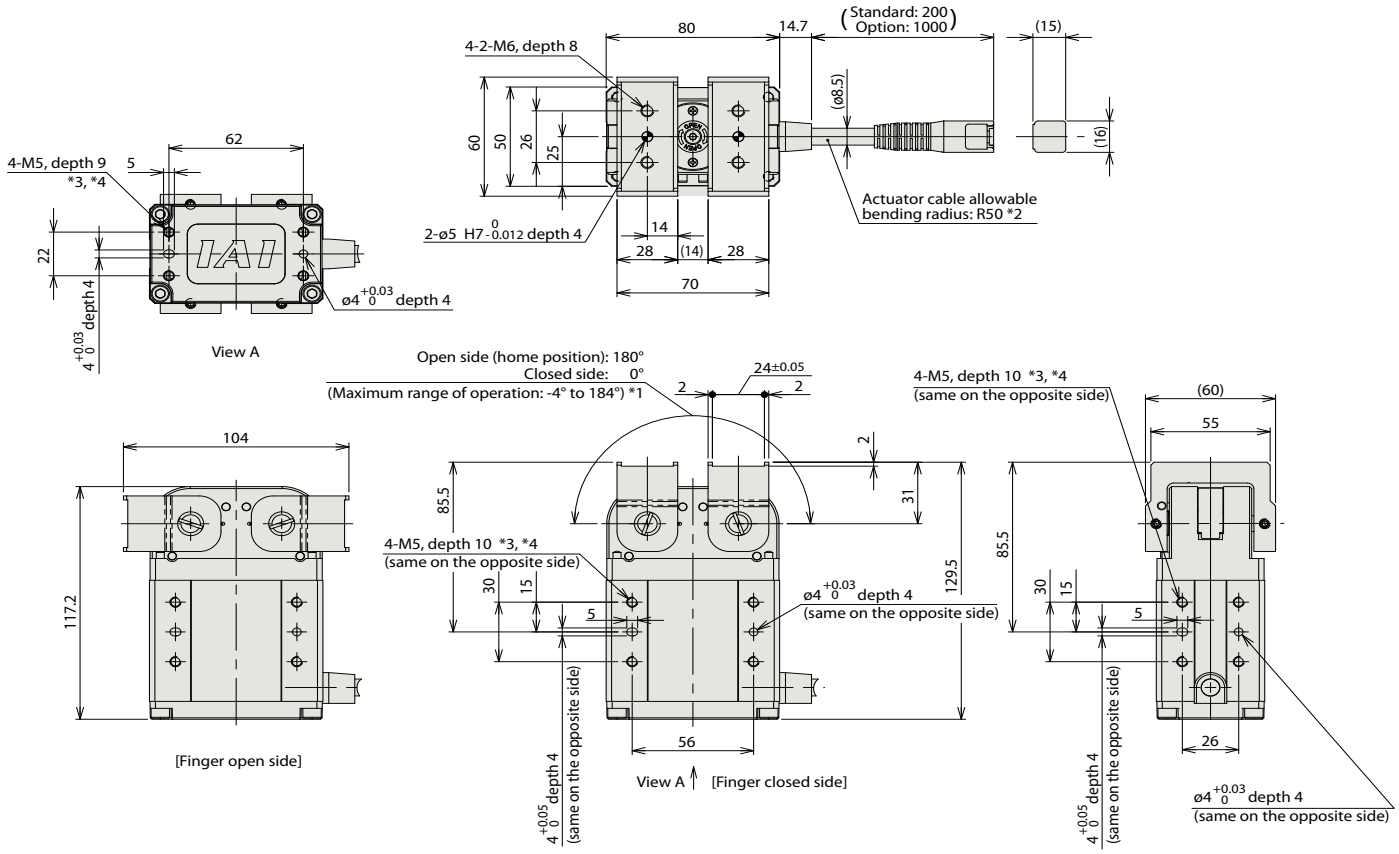

* The standard configuration is that the home is on the open side. If you wish to have the home on the closed side, specify an applicable option (model: NM).

Compatible Controllers

The RCP4 series actuators can operate with the controllers below. Select the controller according to your usage.

Name	External View	Model Number	Description	Max. Pos. Points	Input Voltage	Power Supply Capacity		See Page
Solenoid Valve Multi-axis Type PIO Specification		MSEP-C- ③ -~- ① -2-0	Positioner type based on PIO control, allowing up to 8 axes to be connected	3 points	DC24V	See RoboCylinder General Catalog.		→ P29
Solenoid Valve Multi-axis Type Network Specification		MSEP-C- ③ -~- ④ -0-0	Filed network-ready positioner type, allowing up to 8 axes to be connected	256 points				
Positioner Type		PCON-CA-42PI- ① -2-0	PIO control ready	512 points		2.2 A max.		
Pulse Train Type		PCON-CA-42PI-PL□-2-0	Pulse-train input ready	—				
Network Type		PCON-CA-42PI- ④ - 0-0	Field network ready	768 points				

* ① indicates I/O type (NP/PN).
* ③ indicates number of axes (1~8).
* ④ indicates field network specification symbol.
* □ indicates N (NPN specification) or P (PNP specification) symbol.

Slider Type

Step 1
Check the required gripping force and maximum allowable work part mass.

Step 2
Check the gripping point disatnce.

Step 3
Check the external forces the finger will receive.

Step 1 Check the required gripping force and maximum allowable work part mass.

If the work part is to be gripped using frictional force generated by gripping force, calculate the required gripping force as follows.

① Normal Transfer

F: Gripping force (N) – Total sum of push forces of both fingers
μ: Coefficient of static friction between the finger attachment and work part
m: Work part mass (kg)
g: Gravitational acceleration (= 9.8 m/s²)

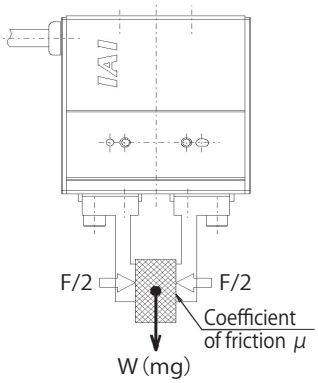

- The conditions under which the work part remains statically gripped without dropping are as follows:

$$F\mu > W \qquad F > \frac{mg}{\mu}$$

- Assuming a recommended safety factor of 2 for normal transfer, the required gripping force is calculated as follows:

$$F > \frac{mg}{\mu} \times 2 \text{ (Safety factor)}$$

- If the coefficient of friction μ is between 0.1 and 0.2, the following relationship holds water:

$$F > \frac{mg}{0.1 \sim 0.2} \times 2 = (10 \sim 20) \times mg$$

Normal transfer of work part

Required gripping force	▶ At least **10 to 20 times the work part mass**
Max. allowable work part mass	▶ Not more than **1/10th to 1/20th the gripp. force**

* The greater the coefficient of static friction, the greater than maximum allowable work part mass becomes. To ensure safety, however, select a model that can generate a gripping force of at least 10 to 20 times this work part mass.

② Work part receive large acceleration/deceleration and/or impact force during transfer.

In addition to the gravity, a strong inertial force may act upon the work part.
In this case, select an appropriate model by increasing the safety factor further.

Receiving large acceleration/deceleration or impact

Required gripping force	▶ At least **30 to 50 times the work part mass**
Max. allowable work part mass	▶ Not more than **1/30th to 1/50th the gripp. force**

Step 2 Check the gripping point distance.

Use the actuator so that the distances (L, H) from the finger mounting surface to the gripping point fall in the ranges specified below. If the limits are exceeded, excessive moments may act upon the sliding part of the finger and internal mechanism, negatively affecting the service life of the actuator.

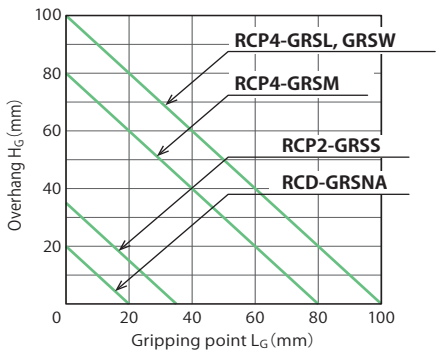

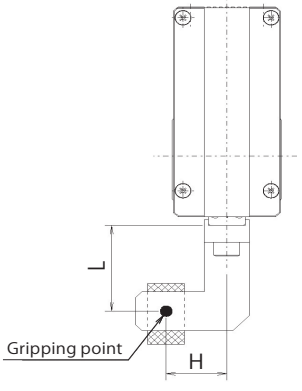

Even when the gripping point distance is within the limits, still design your actuator as compact and lightweight as possible. If the finger is long and large, or heavy, the inertial forces generating upon opening/closing as well as bending moments may cause the performance of the actuator to drop or negatively affect its guide.

Rough Guide for Shape and Mass of Work Part

1. The graphs show the gripping force as a function of the gripping point distance when the maximum gripping force represents 100%.
2. The gripping point distance indicates the longitudinal distance from the finger attachment mounting surface to the gripping point.
3. The gripping force varies from one actuator to another. Use the values provided below for reference purpose only.

RCD-GRSNA

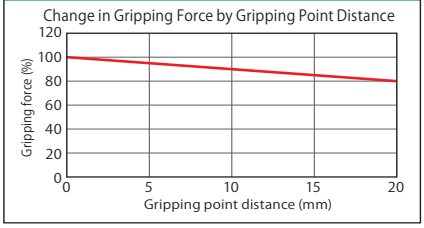

RCP2-GRSS

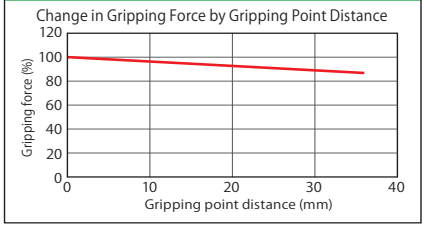

RCP4-GRSML

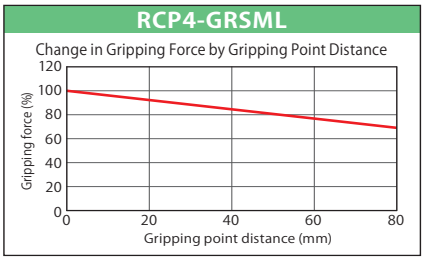

RCP4-GRSLL

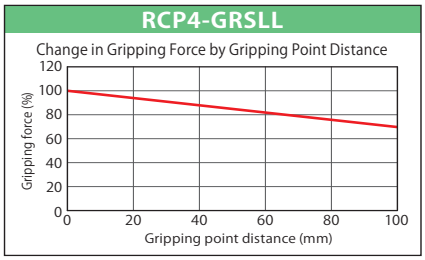

RCP4-GRSWL

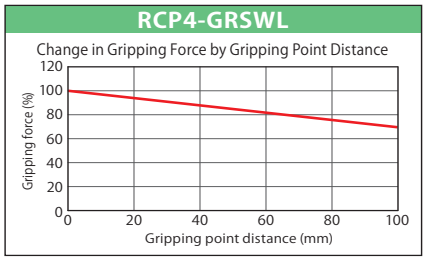

Step 3 Check the external forces the finger will receive.

① Allowable vertical load

Confirm that the vertical load each finger will receive is equal to or less than the allowable load.

② Allowable load moment

Calculate Ma and Mc using L1, and Mb using L2. Confirm that the moments each finger will receive are equal to or less than the maximum allowable load moment.

● When each finger receives a moment load, the allowable external force must satisfy the relationship below:

$$\text{Allowable load F (N)} > \frac{\text{M (Maximum allowable moment) (N·m)}}{\text{L (mm)} \times 10^{-3}}$$

Calculate the allowable load F (N) based on both L1 and L2.

Confirm that the external force the finger will receive is equal to or less than the calculated allowable load F (N) (based on L1 or L2, whichever is smaller).

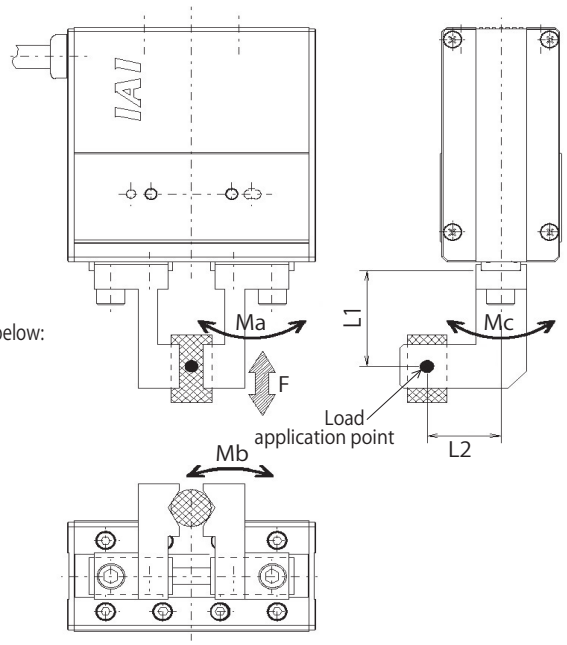

Model Number	Allowable vertical load F (N))	Maximum allowable load moment (N·m)		
		Ma	Mb	Mc
RCD-GRSNA	14	0.04	0.04	0.07
RCP2-GRSS	60	0.5	0.5	1.5
RCP4-GRSM	356	1.9	2.7	4.6
RCP4-GRSL	558	3.8	5.5	9.5
RCP4-GRSW	651	5.1	7.2	12.4

1. The allowable values listed above are static values. 2. The allowable values are per-finger values.

* The weight of the finger and that of the work part are also included in the external force.
The external force the finger will receive also includes the centrifugal force that generates when the gripper is turned while gripping the work part, or the inertial force that generates as the actuator accelerates/decelerates while moving.

* The load application point shown above indicates the position of the load applied to the finger.
This position varies depending on the type of load.
- Load due to gripping force: Gripping point
- Load due to gravity: Gravity center position
- Inertial force while moving, centrifugal force while turning: Gravity center position

The load moment represents the total sum of loads of different types.

Lever Type

Step 1
Check the required gripping force and maximum allowable work part mass.

Step 2
Check the inertial moment around the finger attachment.

Step 3
Check the external forces the finger will receive.

Step 1 Check the required gripping force and maximum allowable work part mass.

Follow the same instruction in step 1 for the slider type to calculate the required gripping force and confirm that the specified condition are met.

Normal transfer of work part

Required gripping force ▶ At least **10 to 20 times the work part mass**
Max. allowable work part mass ▶ Not more than **1/10th to 1/20th the gripp. force**

Receiving large acceleration/deceleration or impact

Required gripping force ▶ At least **30 to 50 times the work part mass**
Max. allowable work part mass ▶ Not more than **1/30th to 1/50th the gripp. force**

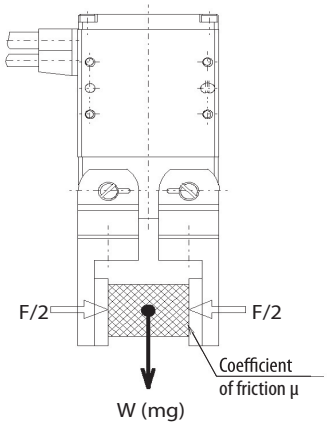

Step 2 Check the inertial moment around the finger attachment.

Confirm that the total inertial moment around the Z-axis (fulcrum) of the finger attachment is within the allowable range. Divide the total inertial moment into multiple components according to the configuration and shape of the finger and calculate each component separately. An example of calculating the total inertial moment by dividing it into two components is given below.

[1] Inertial moment J_{Z1} around the Z1-axis (center of gravity of A) (Section A)

m1 : Mass of A (kg)
a1, b1, c1 : Dimensions of A (mm)

$$m1\ (kg) = a1 \times b1 \times c1 \times \text{Specific gravity} \times 10^{-6}$$

$$J_{Z1}\ (kg \cdot m^2) = \frac{m1\ (a1^2 \times b1^2) \times 10^{-6}}{12}$$

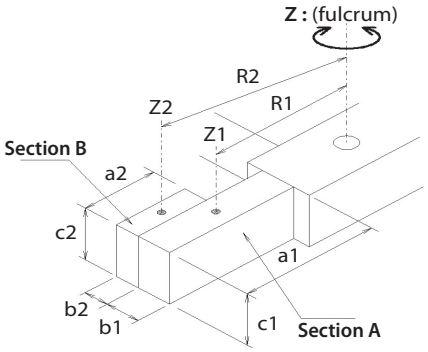

[2] Inertial moment J_{Z2} around the Z2-axis (center of gravity of B) (Section B)

m2 : Mass of B (kg)
a2, b2, c2 : Dimensions of B (mm)

$$m2\ (kg) = a2 \times b2 \times c2 \times \text{Specific gravity} \times 10^{-6}$$

$$J_{Z2}\ (kg \cdot m^2) = \frac{m2\ (a2^2 \times b2^2) \times 10^{-6}}{12}$$

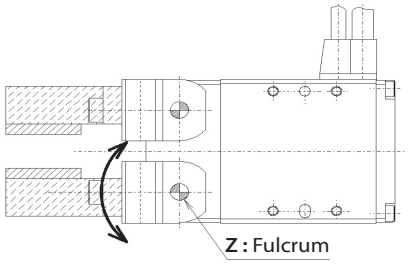

[3] Total inertial moment J around the Z-axis (fulcrum)

R1 : Distance from the center of gravity of A to the fulcrum of opening/closing finger (mm)
R2 : Distance from the center of gravity of B to the fulcrum of opening/closing finger (mm)

$$J\ (kg \cdot m^2) = (J_{Z1} + m1\ R1^2 \times 10^{-6}) + (J_{Z2} + m2\ R2^2 \times 10^{-6})$$

Model Number	Allowable inertial moment J (kg•m²)	Mass m (roughly) (kg)
RCP2-GRLS	1.5×10^{-4}	0.07
RCP4-GRLM	6.0×10^{-4}	0.15
RCP4-GRLL	1.3×10^{-3}	0.25
RCP4-GRLW	3.0×10^{-3}	0.4

Step 3 Check the external forces the finger will receive.

[1] Allowable load torque T

Confirm that the load torque the finger will receive is equal to or less than the maximum allowable load torque. The load torque is calculated from the weight of the finger and that of the work part as follows.

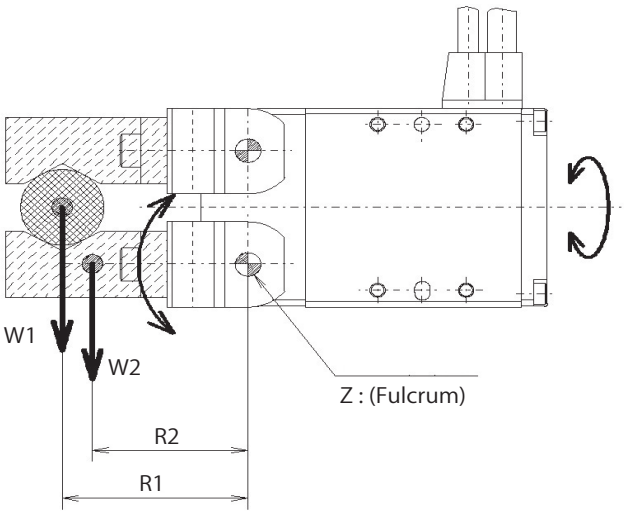

m1 : Work part mass (kg)
R1 : Distance from the center of gravity of the work part to the fulcrum of opening/closing finger (mm)
m2 : Finger mass (kg)
R2 : Distance from the center of gravity of the finger to the fulcrum of opening/closing finger (mm)
g : Gravitational acceleration (9.8 m/s^2)

$$T = (W1 \times R1 \times 10^{-3}) + (W2 \times R2 \times 10^{-3}) + (\text{Other load torque})$$
$$= (m1\ g \times R1 \times 10^{-3}) + (m2\ g \times R2 \times 10^{-3}) + (\text{Other load torque})$$

* The centrifugal force that generates when the gripper is turned while gripping the work part or the inertial force that generates as the actuator accelerates/decelerates while moving horizontally, is also a part of the load torque the finger will receive. Add each applicable force to the aforementioned torque to calculate the total torque, and confirm that the total torque is equal to or less than the maximum allowable load torque.

Model Number	Maximum allowable load torque T (N•m)
RCP2-GRLS	0.05
RCP4-GRLM	0.35
RCP4-GRLL	0.70
RCP4-GRLW	1.50

[2] Allowable thrust load F

Confirm that the thrust load generated by the finger opening/closing axis is equal to or less than the allowable load.

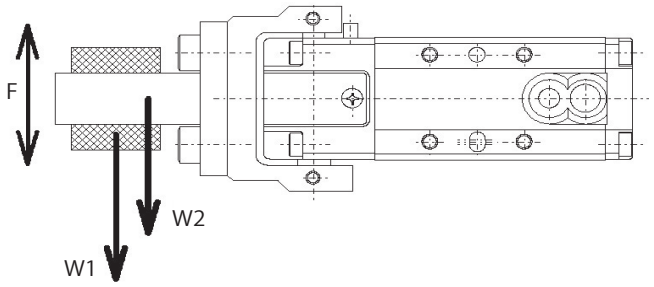

$$F = W1 + W2 + (\text{Other thrust load})$$
$$= m1\ g + m2\ g + (\text{Other thrust load})$$

Model Number	Maximum allowable thrust load F (N)
RCP2-GRLS	15
RCP4-GRLM	20
RCP4-GRLL	25
RCP4-GRLW	30

PCON-CA

Positioner / Pulse-train / Field network Type

Position controller CON series for RCP2/RCP4 Gripper

List of Models

RoboCylinder Position Controller PowerCon 150 <PCON-CA>

External view											
I/O type		Positioner type	Pulse-train type	Field network type (*) Mechatrolink w/o CE conformity yet.							
				DeviceNet	CC-Link	PROFIBUS	CompoNet	MECHATROLINK	EtherCAT	EtherNet/IP	PROFINET
				DeviceNet specification	CC-Link specification	PROFIBUS specification	CompoNet specification	MECHATROLINK specification(*)	EtherCAT specification	EtherNet/IP specification	PROFINET specification
I/O code		NP/PN	PLN/PLP	DV	CC	PR	CN	ML	EC	EP	PRT
Incremental specification		○	○	○	○	○	○	○	○	○	○
Simple absolute specification	With absolute battery	○	–	○	○	○	○	○	○	○	○
	With absolute battery unit	○	–	○	○	○	○	○	○	○	○
	No absolute battery	○	–	○	○	○	○	○	○	○	○

MSEP

Positioner / Field network 8-axis Type

Position controller SEP series for RCP2/RCP4 Gripper

List of Models

Type	C									
I/O category	NP	PN	DV	CC	PR	CN	ML	EC	EP	PRT
Item name	PIO specification (NPN type)	PIO specification (PNP type)	DeviceNet specification	CC-Link specification	PROFIBUS-DP specification	CompoNet specification	MECHATROLINK specification (*)	EtherCAT specification	EtherNet/IP specification	ProfiNet specification
Exterior view	(*) Mechatrolink w/o CE conformity yet. * The picture shown is of the PIO specification. Depending on the I/O category, the PIO connector and field network joint connector changes.									
Item description	Operates via digital signals from the PLC		Operates with any of the above field network connections. A choice of method either a serial communication with PIO specification control, or transmitting traveling position, velocity and acceleration by data is available.							
No. of positions	3 positions per axis		256 positions per axis (There is no limit if operated directly by transferring data)							

DSEP

Positioner Standard / Dustproof Type (Model C/CW)

3-Position controller SEP series for RCD Gripper

Controller Model Description

DSEP — [Type] — 3 — I — [I/O type] — [I/O cable length] — [Power supply voltage]

Series	Type	Motor	Encoder	I/O type	I/O cable length	Power supply voltage
DSEP	C Standard CW Dustproof	3 Brushless, DC, 2.5 W	I Incremental	NP NPN PN PNP	0 No cable 2 2 m (standard) 3 3m 5 5m	0 24 V DC

DCON-CA

Positioner / Pulse-train / Field network Type

Position controller CON series for RCD Gripper

List of Models

RoboCylinder Position Controller <DCON-CA>

I/O type	PIO type	Pulse-train type	Field network type (*) Mechatrolink w/o CE conformity yet.							
			DeviceNet	CC-Link	PROFIBUS	CompoNet	MECHATROLINK	EtherCAT	EtherNet/IP	PROFINET
			DeviceNet connection specification	CC-Link connection specification	PROFIBUS-DP connection specification	CompoNet connection specification	Mechatrolink connection specification (*)	EtherCAT connection specification	EtherNet/IP connection specification	PROFINET-IO connection specification
I/O code	NP/PN	PLN/PLP	DV	CC	PR	CN	ML	EC	EP	PRT
Incremental specification	○	○	○	○	○	○	○	○	○	○

Controller Model Description

DCON — CA — [Motor type] — I — [I/O type] — [I/O cable length] — 0 — [Controller mounting specification]

Series	Type	Motor type	Encoder type	I/O type	I/O cable length	Power supply voltage	Controller mounting specification
DCON	CA Standard type	3 2.5W motor (brushless DC motor)	I Incremental	NP PIO (NPN) specification PN PIO (PNP) specification PLN Pulse-train (NPN) specification PLP Pulse-train (PNP) specification DV DeviceNet specification CC CC-Link specification PR PROFIBUS-DP specification CN CompoNet specification ML MECHATROLINK specific. (*) EC EtherCAT specification EP EtherNet/IP specification PRT PROFINET-IO specification	0 No cable 2 2m 3 3m 5 5m	0 DC24V	(Blank) Screw fastening specification DN DIN rail mounting specification

* If the field network specification is selected, the I/O cable length is "0."

* Mechatrolink w/o CE conformity yet.

CJ0207-1A-UST-2-0914

IAI
Quality and Innovation

IAI America, Inc.

Headquarters: 2690 W. 237th Street, Torrance, CA 9050 (800) 736-1712
Chicago Office: 110 East State Parkway, Schaumburg, IL 60173 (800) 944-0333
Atlanta Office: 1220 Kennestone Circle, Suite 108, Marietta, GA 30066 (888) 354-9470

www.intelligentactuator.com

IAI Industrieroboter GmbH
Ober der Röth 4, D-65824 Schwalbach am Taunus, Germany

IAI Robot (Thailand), CO., Ltd.
825 PhairojKijja Tower 12th Floor, Bangna-Trad RD.,
Bangna, Bangna, Bangkok 10260, Thailand

ISO 9001
BUREAU VERITAS
Certification

The information contained in this product brochure may change without prior notice due to product improvements.