Slider Type
Mini
Standard
Controllers Integrated
Rod Type
Mini
Standard
Controllers Integrated
Table/ Arm/ Flat Type
Mini
Standard
Gripper/ Rotary Type
Linear Servo Type
Clean-room Type
Splash-Proof Type
Pulse Motor
Servo Motor (24V)
Servo Motor (200V)
Linear Servo Motor

# RCS2-RN5N

Robo Cylinder, Mini Rod Type, Short-Length Tapped-Hole Mounting Type, Actuator Width 46mm, 200V Servo Motor, Ball Screw Specification

**Model Specification Items**

| RCS2 | RN5N | I | 60 | ☐ | ☐ | ☐ | ☐ | ☐ |
|---|---|---|---|---|---|---|---|---|
| Series | Type | Encoder type | Motor type | Lead | Stroke | Applicable controller | Cable length | Options |
| | | I:Incremental specification | 60: 60W Servo motor | 10 : 10mm<br>5 : 5mm<br>2.5: 2.5mm | 50: 50mm<br>75: 75mm | T1*: XSEL-J/K<br>T2 : SCON-CA<br>SSEL<br>XSEL-P/Q | N: None<br>P: 1m<br>S: 3m<br>M: 5m<br>X□□: Custom Length<br>R□□: Robot Cable | See options below. |

* See page Pre-47 for details on the model descriptions.

* T1 can be selected for absolute specification only.

CE RoHS

*CE compliance is optional.

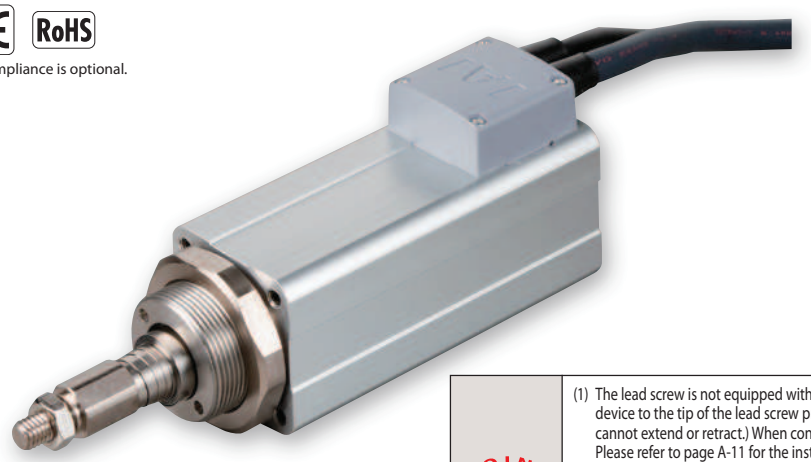

Technical References Appendix P.5

**POINT** Notes on selection

(1) The lead screw is not equipped with an anti-rotation device, so please attach a guide or similar locking device to the tip of the lead screw prior to use. (If there is no anti-rotation device attached, the lead screw cannot extend or retract.) When connecting the anti-rotation device and rod, do not use a floating joint. Please refer to page A-11 for the instruction details.
(2) The horizontal payload is the value when the actuator uses an external guide.
(3) The payload is the value when the actuator is operated at an acceleration of 0.3 G (0.2G for 2.5mm-lead) horizontally and 0.2G vertically. The acceleration limit is the value indicated above.
(4) Do not apply an external force on the rod in any direction other than the direction the rodis moving in.
(5) If the actuator is used vertically, pay attention to rod contact because the rod will come down when the power is turned off.
(6) See page A-71 for details on push motion.

## Actuator Specifications

### Leads and Payloads

| Model number | Motor output (W) | Feed screw | Lead (mm) | Max. Load Capacity Horizontal (kg) | Max. Load Capacity Vertical (kg) | Rated thrust (N) | Positioning Repeatability (mm) | Stroke (mm) |
|---|---|---|---|---|---|---|---|---|
| RCS2-RN5N-I-60-10-①-T2-②-③ | 60 | Ball screw | 10 | 5 | 1.5 | 89 | ±0.02 | 50<br>75 |
| RCS2-RN5N-I-60-5-①-T2-②-③ | | | 5 | 10 | 3 | 178 | | |
| RCS2-RN5N-I-60-2.5-①-T2-②-③ | | | 2.5 | 20 | 6 | 356 | | |

Code explanation ① Stroke ② Cable length ③ Options *See page A-71 for details on push motion.

### Stroke and Maximum Speed

| Lead \ Stroke | 50 (mm) | 75 (mm) |
|---|---|---|
| 10 | 280 <230> | 380 <330> |
| 5 | 250 <230> | 250 |
| 2.5 | 125 | |

* The values enclosed in < > apply to vertical settings.

(Unit: mm/s)

### ① Stroke

| Stroke (mm) | Standard price |
|---|---|
| 50 | — |
| 75 | — |

### ② Cable Length

| Type | Cable symbol | Standard Price |
|---|---|---|
| Standard | **P** (1m) | — |
| | **S** (3m) | — |
| | **M** (5m) | — |
| Special length | **X06** (6m) ~ **X10** (10m) | — |
| | **X11** (11m) ~ **X15** (15m) | — |
| | **X16** (16m) ~ **X20** (20m) | — |
| Robot Cable | **R01** (1m) ~ **R03** (3m) | — |
| | **R04** (4m) ~ **R05** (5m) | — |
| | **R06** (6m) ~ **R10** (10m) | — |
| | **R11** (11m) ~ **R15** (15m) | — |
| | **R16** (16m) ~ **R20** (20m) | — |

* See page A-59 for cables for maintenance.

### ③ Options

| Name | Option code | See page | Standard price |
|---|---|---|---|
| Brake | **B** | → A-42 | — |
| CE compliance | **CE** | → A-42 | — |
| Connector cable exits (left) | **K1** | → A-51 | — |
| Connector cable exits (front) | **K2** | → A-51 | — |
| Connector cable exits (right) | **K3** | → A-51 | — |

### Actuator Specifications

| Item | Description |
|---|---|
| Drive System | Ball screw, ø8mm, rolled C10 |
| Lost Motion | 0.1mm or less |
| Frame | Material: Aluminum, white alumite treated |
| Ambient operating temperature, humidity | 0 to 40°C, 85% RH or less (Non-condensing) |
| Service life | 5,000km or 50 million cycles |

## Dimensional Drawings

CAD drawings can be downloaded from the website. www.intelligentactuator.com

2D CAD 3D CAD

For Special Orders Appendix P.15

(*1) Connect the motor and encoder cables here. See page A-59 for details on cables.
(*2) After homing, the slider moves to the ME, therefore, please watch for any interference with surrounding objects.
ME : Mechanical end SE : Stroke end
(*3) The orientation of the nut varies depending on the product.

Note:
This product doesn't come with the screw stopper.
Please add a stopper before use.

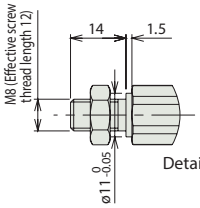


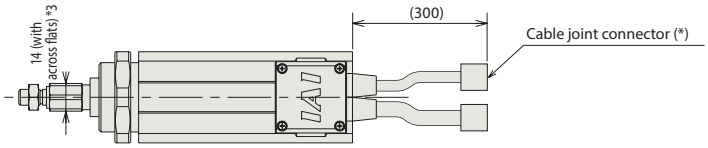


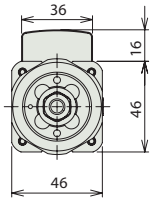


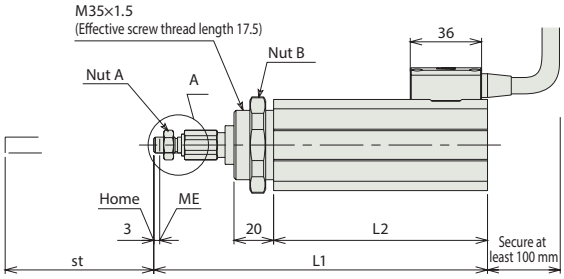


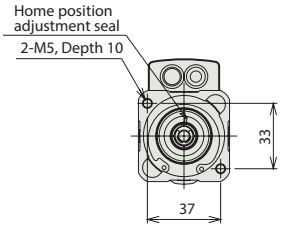


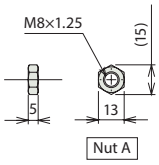


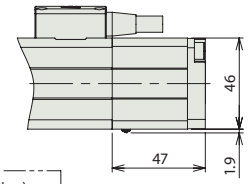


(With Brake size)

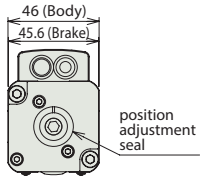


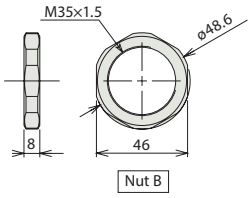


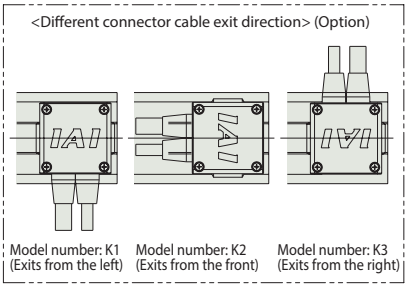


* Brake-equipped models are heavier by 0.26kg.

### Dimensions and Weight by Stroke

| Stroke | 50 | 75 |
|---|---|---|
| L1 | 168.5 | 193.5 |
| L2 | 108 | 133 |
| Weight (kg) | 1.0 | 1.1 |

## Applicable Controllers

RCS2 series actuators can be operated with the controllers indicated below. Select the type according to your intended application.

| Name | External view | Model number | Features | Maximum number of positioning points | Input power | Power-supply capacity | Standard price | Reference page |
|---|---|---|---|---|---|---|---|---|
| Positioner Type | | SCON-CA-60I-NP-2-Ⓘ | Up to 512 positioning points are supported | 512 points | Single-phase 100 VAC<br>Single-phase 200 VAC<br>3-phase 200 VAC (XSEL-P/Q only) | 218 VA max.<br>* Varies depending on the controller. Refer to the operation manual for details. | — | → P643 |
| Solenoid mode | | | Can be operated with the same controls used for solenoid valves | 7 points | | | | |
| Network mode | | | Can be moved by direct numerical specification | 768 points | | | | |
| Pulse-train input control mode | | | Can be controlled using pulse trains | (—) | | | — | |
| Program control type 1 or 2 axes | | SSEL-CS-1-60I-NP-2-Ⓘ | Program operation is supported<br>Up to two axes can be operated | 20,000 points | | | — | → P685 |
| Program control type 1 or 6 axes | | XSEL-Ⓘ-1-60I-N1-EEE-2-3 | Program operation is supported<br>Up to six axes can be operated | 20,000 points | | | — | → P695 |

* The values of SSEL and XSEL assume a 1-axis specification. * Ⓘ indicates the type of power-supply voltage (1: 100 V/2: Single-phase 200 V). * Ⓘ indicates the XSEL type (P/Q).

(Note) The incremental specification of this model can not be connected to XSEL-J/K, 5 and 6-axis types of XSEL-P/Q, XSEL-R/S, MSCON, and SCON-CAL/CGAL.

Slider Type
Mini
Standard
Controllers Integrated
Rod Type
Mini
Standard
Controllers Integrated
Table/ Arm/ Flat Type
Mini
Standard
Gripper/ Rotary Type
Linear Servo Type
Clean-room Type
Splash-Proof Type
Pulse Motor
Servo Motor (24V)
Servo Motor (200V)
Linear Servo Motor

# RCS2-RP5N

Robo Cylinder, Mini Rod Type, Short-Length Tapped-Hole Mounting Type, Actuator Width 46mm, 200V Servo Motor, Ball Screw Specification

**Model Specification Items**

| RCS2 | RP5N | I | 60 | ☐ | ☐ | ☐ | ☐ | ☐ |
|---|---|---|---|---|---|---|---|---|
| Series | Type | Encoder type | Motor type | Lead | Stroke | Applicable controller | Cable length | Options |
| | | I:Incremental specification | 60: 60W Servo motor | 10 : 10mm<br>5 : 5mm<br>2.5: 2.5mm | 50: 50mm<br>75: 75mm | T1*: XSEL-J/K<br>T2 : SCON-CA<br>SSEL<br>XSEL-P/Q | N: None<br>P: 1m<br>S: 3m<br>M: 5m<br>X□□: Custom Length<br>R□□: Robot Cable | See options below. |

* See page Pre-47 for details on the model descriptions.

*T1 can be selected for absolute specification only.

CE RoHS

*CE compliance is optional.

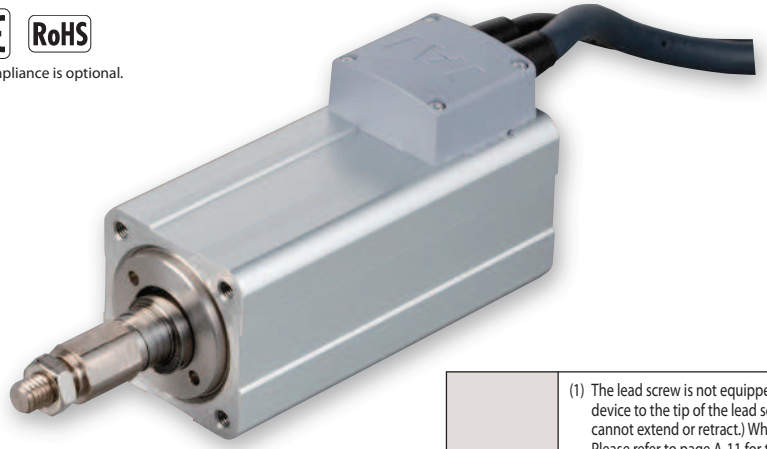

Technical References — Appendix P.5

**POINT — Notes on selection**

(1) The lead screw is not equipped with an anti-rotation device, so please attach a guide or similar locking device to the tip of the lead screw prior to use. (If there is no anti-rotation device attached, the lead screw cannot extend or retract.) When connecting the anti-rotation device and rod, do not use a floating joint. Please refer to page A-11 for the instruction details.
(2) The horizontal payload is the value when the actuator uses an external guide.
(3) The payload is the value when the actuator is operated at an acceleration of 0.3 G (0.2G for 2.5mm-lead) horizontally and 0.2G vertically. The acceleration limit is the value indicated above.
(4) Do not apply an external force on the rod in any direction other than the direction the rodis moving in.
(5) If the actuator is used vertically, pay attention to rod contact because the rod will come down when the power is turned off.
(6) See page A-71 for details on push motion.

## Actuator Specifications

### Leads and Payloads

| Model number | Motor output (W) | Feed screw | Lead (mm) | Max. Load Capacity Horizontal (kg) | Max. Load Capacity Vertical (kg) | Rated thrust (N) | Positioning Repeatability (mm) | Stroke (mm) |
|---|---|---|---|---|---|---|---|---|
| RCS2-RP5N-I-60-10-①-T2-②-③ | 60 | Ball screw | 10 | 5 | 1.5 | 89 | ±0.02 | 50<br>75 |
| RCS2-RP5N-I-60-5-①-T2-②-③ | | | 5 | 10 | 3 | 178 | | |
| RCS2-RP5N-I-60-2.5-①-T2-②-③ | | | 2.5 | 20 | 6 | 356 | | |

Code explanation ① Stroke ② Cable length ③ Options *See page A-71 for details on push motion.

### Stroke and Maximum Speed

| Lead \ Stroke | 50 (mm) | 75 (mm) |
|---|---|---|
| 10 | 280 <230> | 380 <330> |
| 5 | 250 <230> | 250 |
| 2.5 | 125 | |

* The values enclosed in < > apply to vertical settings.

(Unit: mm/s)

### ① Stroke

| Stroke (mm) | Standard price |
|---|---|
| 50 | — |
| 75 | — |

### ② Cable Length

| Type | Cable symbol | Standard Price |
|---|---|---|
| Standard | **P** (1m) | — |
| | **S** (3m) | — |
| | **M** (5m) | — |
| Special length | **X06** (6m) ~ **X10** (10m) | — |
| | **X11** (11m) ~ **X15** (15m) | — |
| | **X16** (16m) ~ **X20** (20m) | — |
| Robot Cable | **R01** (1m) ~ **R03** (3m) | — |
| | **R04** (4m) ~ **R05** (5m) | — |
| | **R06** (6m) ~ **R10** (10m) | — |
| | **R11** (11m) ~ **R15** (15m) | — |
| | **R16** (16m) ~ **R20** (20m) | — |

* See page A-59 for cables for maintenance.

### ③ Options

| Name | Option code | See page | Standard price |
|---|---|---|---|
| Brake | **B** | → A-42 | — |
| CE compliance | **CE** | → A-42 | — |
| Connector cable exits (left) | **K1** | → A-51 | — |
| Connector cable exits (front) | **K2** | → A-51 | — |
| Connector cable exits (right) | **K3** | → A-51 | — |

### Actuator Specifications

| Item | Description |
|---|---|
| Drive System | Ball screw, ø8mm, rolled C10 |
| Lost Motion | 0.1mm or less |
| Frame | Material: Aluminum, white alumite treated |
| Ambient operating temperature, humidity | 0 to 40°C, 85% RH or less (Non-condensing) |
| Service life | 5,000km or 50 million cycles |

## Dimensional Drawings

CAD drawings can be downloaded from the website. www.intelligentactuator.com

2D CAD 3D CAD

For Special Orders Appendix P.15

(*1) Connect the motor and encoder cables here. See page A-59 for details on cables.
(*2) After homing, the slider moves to the ME, therefore, please watch for any interference with surrounding objects.
ME : Mechanical end SE : Stroke end
(*3) The orientation of the nut varies depending on the product.

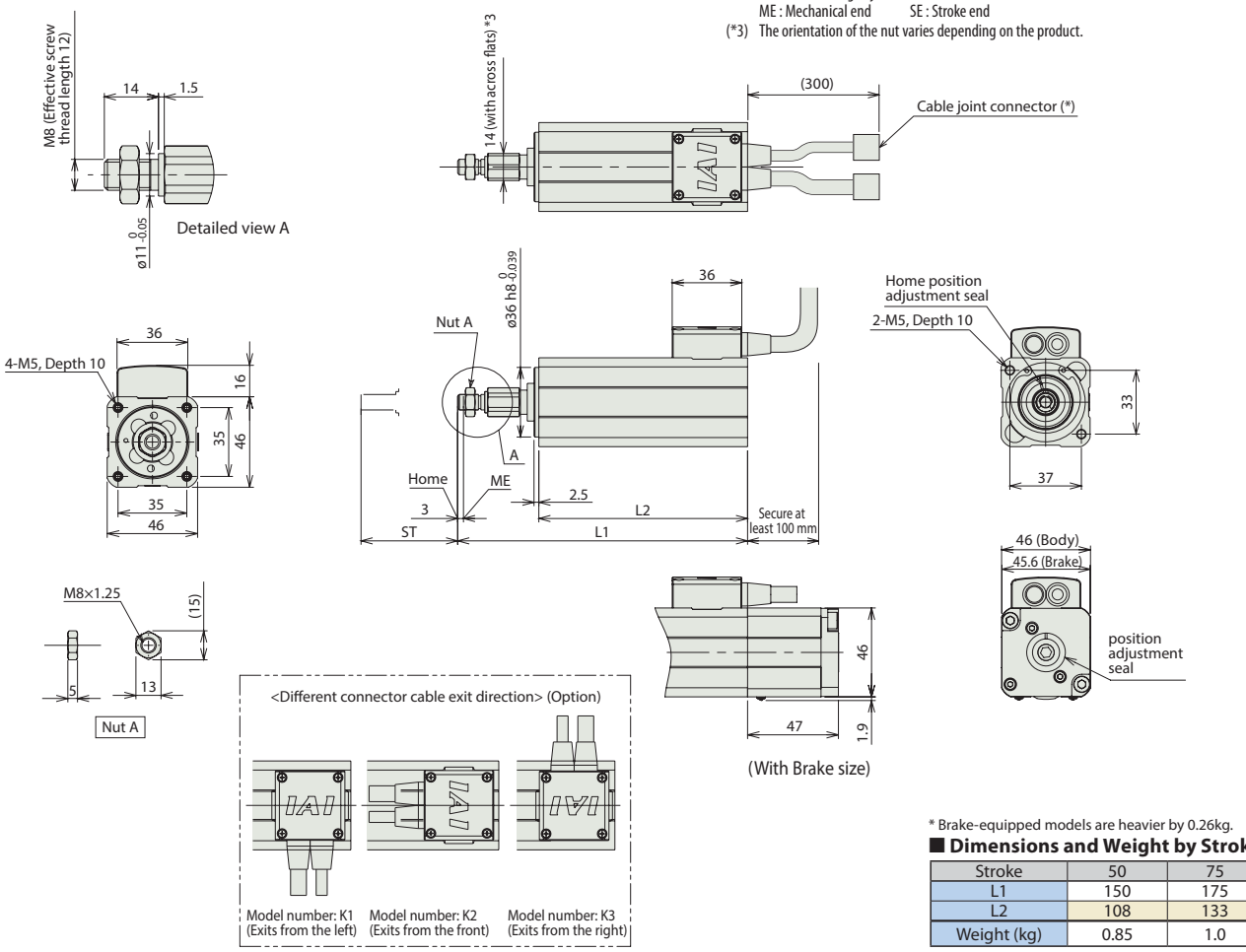


* Brake-equipped models are heavier by 0.26kg.

### Dimensions and Weight by Stroke

| Stroke | 50 | 75 |
|---|---|---|
| L1 | 150 | 175 |
| L2 | 108 | 133 |
| Weight (kg) | 0.85 | 1.0 |

## Applicable Controllers

RCS2 series actuators can be operated with the controllers indicated below. Select the type according to your intended application.

| Name | External view | Model number | Features | Maximum number of positioning points | Input power | Power-supply capacity | Standard price | Reference page |
|---|---|---|---|---|---|---|---|---|
| Positioner Type | | SCON-CA-60I-NP-2-Ⓘ | Up to 512 positioning points are supported | 512 points | Single-phase 100 VAC<br>Single-phase 200 VAC<br>3-phase 200 VAC (XSEL-P/Q only) | 218 VA max.<br>* Varies depending on the controller. Refer to the operation manual for details. | — | → P643 |
| Solenoid mode | | | Can be operated with the same controls used for solenoid valves | 7 points | | | | |
| Network mode | | | Can be moved by direct numerical specification | 768 points | | | | |
| Pulse-train input control mode | | | Can be controlled using pulse trains | (—) | | | — | |
| Program control type 1 or 2 axes | | SSEL-CS-1-60I-NP-2-Ⓘ | Program operation is supported<br>Up to two axes can be operated | 20,000 points | | | — | → P685 |
| Program control type 1 or 6 axes | | XSEL-Ⓘ-1-60I-N1-EEE-2-3 | Program operation is supported<br>Up to six axes can be operated | 20,000 points | | | — | → P695 |

* The values of SSEL and XSEL assume a 1-axis specification. * Ⓘ indicates the type of power-supply voltage (1: 100 V/2: Single-phase 200 V). * Ⓘ indicates the XSEL type (P/Q).

(Note) The incremental specification of this model can not be connected to XSEL-J/K, 5 and 6-axis types of XSEL-P/Q, XSEL-R/S, MSCON, and SCON-CAL/CGAL.

Slider Type
Mini
Standard
Controllers Integrated
Rod Type
Mini
Standard
Controllers Integrated
Table/ Arm/ Flat Type
Mini
Standard
Gripper/ Rotary Type
Linear Servo Type
Clean-room Type
Splash-Proof Type
Pulse Motor
Servo Motor (24V)
Servo Motor (200V)
Linear Servo Motor

# RCS2-GS5N

Robo Cylinder, Mini Rod Type, Short-Length Single-Guide Type, Actuator Width 46mm, 200V Servo Motor, Ball Screw Specification

**Model Specification Items**

| RCS2 | GS5N | I | 60 | ☐ | ☐ | ☐ | ☐ | ☐ |
|---|---|---|---|---|---|---|---|---|
| Series | Type | Encoder type | Motor type | Lead | Stroke | Applicable controller | Cable length | Options |
| | | I:Incremental specification | 60: 60W Servo motor | 10 : 10mm<br>5 : 5mm<br>2.5: 2.5mm | 50: 50mm<br>75: 75mm | T1*: XSEL-J/K<br>T2 : SCON-CA<br>SSEL<br>XSEL-P/Q | N: None<br>P: 1m<br>S: 3m<br>M: 5m<br>X□□: Custom Length<br>R□□: Robot Cable | See options below. |

* See page Pre-47 for details on the model descriptions.

* T1 can be selected for absolute specification only.

CE RoHS

*CE compliance is optional.

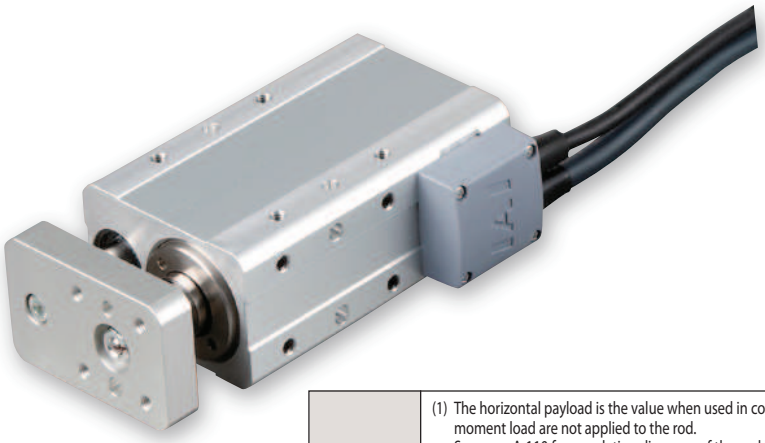

Technical References — Appendix P.5

**POINT — Notes on selection**

(1) The horizontal payload is the value when used in combination with a guide so that a radial load and moment load are not applied to the rod.
See page A-110 for correlation diagrams of the end load and service life when a guide is not installed.
Also note that single-guide types cannot be used if a force is applied in the rotating direction.
Use double-guide types in these applications.

(2) The payload is the value when the actuator is operated at an acceleration of 0.3 G (0.2G for 2.5mm-lead) horizontally and 0.2G vertically. The acceleration limit is the value indicated above.

(3) If the actuator is used vertically, pay attention to rod contact because the rod will come down when the power is turned off.

(4) See page A-71 for details on push motion.

## Actuator Specifications

### Leads and Payloads

| Model number | Motor output (W) | Feed screw | Lead (mm) | Max. Load Capacity Horizontal (kg) | Max. Load Capacity Vertical (kg) | Rated thrust (N) | Positioning Repeatability (mm) | Stroke (mm) |
|---|---|---|---|---|---|---|---|---|
| RCS2-GS5N-I-60-10-①-T2-②-③ | 60 | Ball screw | 10 | 5 | 1.5 | 89 | ±0.02 | 50<br>75 |
| RCS2-GS5N-I-60-5-①-T2-②-③ | | | 5 | 10 | 3 | 178 | | |
| RCS2-GS5N-I-60-2.5-①-T2-②-③ | | | 2.5 | 20 | 6 | 356 | | |

Code explanation ① Stroke ② Cable length ③ Options *See page A-71 for details on push motion.

### Stroke and Maximum Speed

| Lead \ Stroke | 50 (mm) | 75 (mm) |
|---|---|---|
| 10 | 280 <230> | 380 <330> |
| 5 | 250 <230> | 250 |
| 2.5 | 125 | |

* The values enclosed in < > apply to vertical settings.

(Unit: mm/s)

### ① Stroke

| Stroke (mm) | Standard price |
|---|---|
| 50 | — |
| 75 | — |

### ② Cable Length

| Type | Cable symbol | Standard Price |
|---|---|---|
| Standard | **P** (1m) | — |
| | **S** (3m) | — |
| | **M** (5m) | — |
| Special length | **X06** (6m) ~ **X10** (10m) | — |
| | **X11** (11m) ~ **X15** (15m) | — |
| | **X16** (16m) ~ **X20** (20m) | — |
| Robot Cable | **R01** (1m) ~ **R03** (3m) | — |
| | **R04** (4m) ~ **R05** (5m) | — |
| | **R06** (6m) ~ **R10** (10m) | — |
| | **R11** (11m) ~ **R15** (15m) | — |
| | **R16** (16m) ~ **R20** (20m) | — |

* See page A-59 for cables for maintenance.

### ③ Options

| Name | Option code | See page | Standard price |
|---|---|---|---|
| Brake | **B** | → A-42 | — |
| CE compliance | **CE** | → A-42 | — |
| Connector cable exits (left) | **K1** | → A-51 | — |
| Connector cable exits (front) | **K2** | → A-51 | — |
| Connector cable exits (right) | **K3** | → A-51 | — |

### Actuator Specifications

| Item | Description |
|---|---|
| Drive System | Ball screw, ø8mm, rolled C10 |
| Lost Motion | 0.1mm or less |
| Frame | Material: Aluminum, white alumite treated |
| Ambient operating temperature, humidity | 0 to 40°C, 85% RH or less (Non-condensing) |
| Service life | 5,000km or 50 million cycles |

## Dimensional Drawings

CAD drawings can be downloaded from the website. www.intelligentactuator.com

For Special Orders Appendix P.15

2D CAD 3D CAD

(*1) Connect the motor and encoder cables here. See page A-59 for details on cables.
(*2) After homing, the slider moves to the ME, therefore, please watch for any interference with surrounding objects.
ME : Mechanical end SE : Stroke end

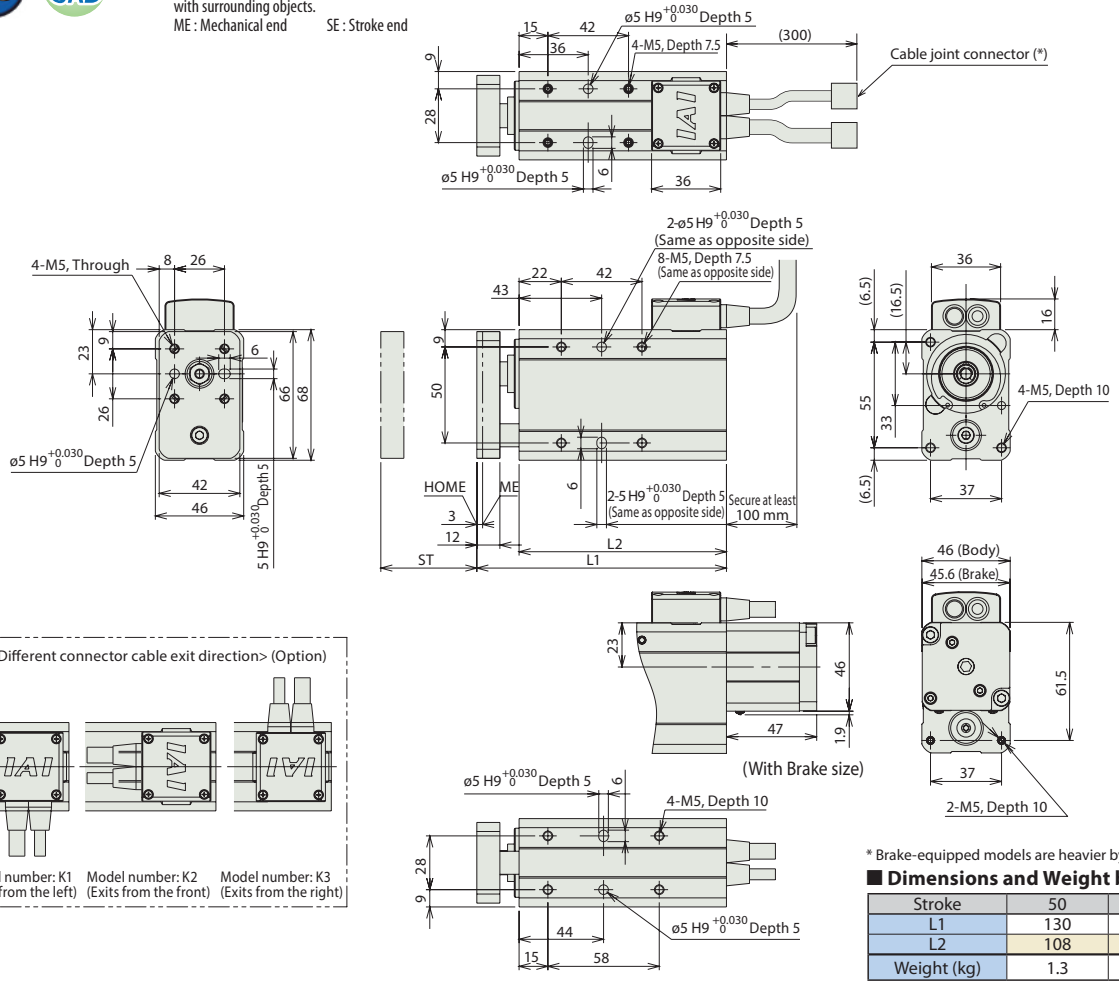


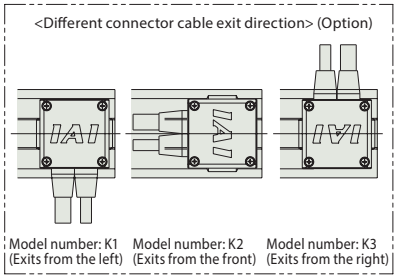


* Brake-equipped models are heavier by 0.26kg.

### Dimensions and Weight by Stroke

| Stroke | 50 | 75 |
|---|---|---|
| L1 | 130 | 155 |
| L2 | 108 | 133 |
| Weight (kg) | 1.3 | 1.4 |

## Applicable Controllers

RCS2 series actuators can be operated with the controllers indicated below. Select the type according to your intended application.

| Name | External view | Model number | Features | Maximum number of positioning points | Input power | Power-supply capacity | Standard price | Reference page |
|---|---|---|---|---|---|---|---|---|
| Positioner Type | | SCON-CA-60I-NP-2-Ⓘ | Up to 512 positioning points are supported | 512 points | Single-phase 100 VAC<br>Single-phase 200 VAC<br>3-phase 200 VAC (XSEL-P/Q only) | 218 VA max.<br>* Varies depending on the controller. Refer to the operation manual for details. | — | → P643 |
| Solenoid mode | | | Can be operated with the same controls used for solenoid valves | 7 points | | | | |
| Network mode | | | Can be moved by direct numerical specification | 768 points | | | | |
| Pulse-train input control mode | | | Can be controlled using pulse trains | (—) | | | — | |
| Program control type 1 or 2 axes | | SSEL-CS-1-60I-NP-2-Ⓘ | Program operation is supported<br>Up to two axes can be operated | 20,000 points | | | — | → P685 |
| Program control type 1 or 6 axes | | XSEL-Ⓘ-1-60I-N1-EEE-2-3 | Program operation is supported<br>Up to six axes can be operated | 20,000 points | | | — | → P695 |

* The values of SSEL and XSEL assume a 1-axis specification. * Ⓘ indicates the type of power-supply voltage (1: 100 V/2: Single-phase 200 V). * Ⓘ indicates the XSEL type (P/Q).

(Note) The incremental specification of this model can not be connected to XSEL-J/K, 5 and 6-axis types of XSEL-P/Q, XSEL-R/S, MSCON, and SCON-CAL/CGAL.

Slider Type
Mini
Standard
Controllers Integrated
Rod Type
Mini
Standard
Controllers Integrated
Table/ Arm/ Flat Type
Mini
Standard
Gripper/ Rotary Type
Linear Servo Type
Clean-room Type
Splash-Proof Type
Pulse Motor
Servo Motor (24V)
Servo Motor (200V)
Linear Servo Motor

# RCS2-GD5N

Robo Cylinder, Mini Rod Type, Short-Length Double-Guide Type, Actuator Width 46mm, 200V Servo Motor, Ball Screw Specification

**Model Specification Items**

| RCS2 | GD5N | I | 60 | ☐ | ☐ | ☐ | ☐ | ☐ |
|---|---|---|---|---|---|---|---|---|
| Series | Type | Encoder type | Motor type | Lead | Stroke | Applicable controller | Cable length | Options |
| | | I:Incremental specification | 60: 60W Servo motor | 10 : 10mm<br>5 : 5mm<br>2.5: 2.5mm | 50: 50mm<br>75: 75mm | T1*: XSEL-J/K<br>T2 : SCON-CA<br>SSEL<br>XSEL-P/Q | N: None<br>P: 1m<br>S: 3m<br>M: 5m<br>X□□: Custom Length<br>R□□: Robot Cable | See options below. |

* See page Pre-47 for details on the model descriptions.

* T1 can be selected for absolute specification only.

CE RoHS

*CE compliance is optional.

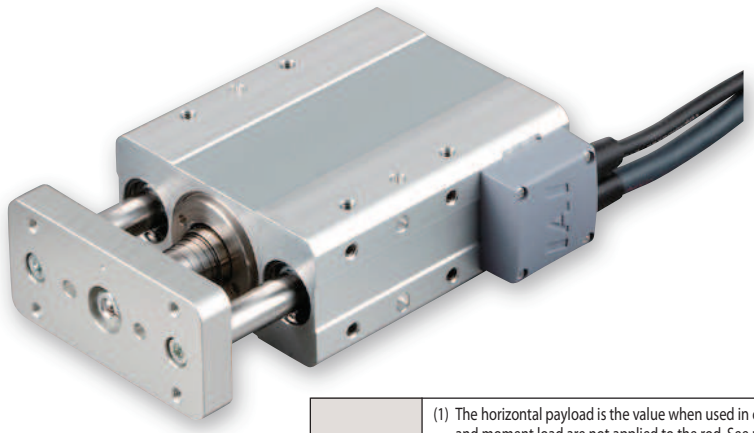

Technical References — Appendix P.5

**POINT — Notes on selection**

(1) The horizontal payload is the value when used in combination with a guide so that a radial load and moment load are not applied to the rod. See page A-111 for correlation diagrams of the end load and service life when a guide is not installed.
(2) The payload is the value when the actuator is operated at an acceleration of 0.3 G (0.2G for 2.5mm-lead) horizontally and 0.2G vertically. The acceleration limit is the value indicated above.
(3) If the actuator is used vertically, pay attention to rod contact because the rod will come down when the power is turned off.
(4) See page A-71 for details on push motion.

## Actuator Specifications

### Leads and Payloads

| Model number | Motor output (W) | Feed screw | Lead (mm) | Max. Load Capacity Horizontal (kg) | Max. Load Capacity Vertical (kg) | Rated thrust (N) | Positioning Repeatability (mm) | Stroke (mm) |
|---|---|---|---|---|---|---|---|---|
| RCS2-GD5N-I-60-10-①-T2-②-③ | 60 | Ball screw | 10 | 5 | 1.5 | 89 | ±0.02 | 50<br>75 |
| RCS2-GD5N-I-60-5-①-T2-②-③ | | | 5 | 10 | 3 | 178 | | |
| RCS2-GD5N-I-60-2.5-①-T2-②-③ | | | 2.5 | 20 | 6 | 356 | | |

Code explanation ① Stroke ② Cable length ③ Options *See page A-71 for details on push motion.

### Stroke and Maximum Speed

| Lead \ Stroke | 50 (mm) | 75 (mm) |
|---|---|---|
| 10 | 280 <230> | 380 <330> |
| 5 | 250 <230> | 250 |
| 2.5 | 125 | |

* The values enclosed in < > apply to vertical settings.

(Unit: mm/s)

### ① Stroke

| Stroke (mm) | Standard price |
|---|---|
| 50 | — |
| 75 | — |

### ② Cable Length

| Type | Cable symbol | Standard Price |
|---|---|---|
| Standard | **P** (1m) | — |
| | **S** (3m) | — |
| | **M** (5m) | — |
| Special length | **X06** (6m) ~ **X10** (10m) | — |
| | **X11** (11m) ~ **X15** (15m) | — |
| | **X16** (16m) ~ **X20** (20m) | — |
| Robot Cable | **R01** (1m) ~ **R03** (3m) | — |
| | **R04** (4m) ~ **R05** (5m) | — |
| | **R06** (6m) ~ **R10** (10m) | — |
| | **R11** (11m) ~ **R15** (15m) | — |
| | **R16** (16m) ~ **R20** (20m) | — |

* See page A-59 for cables for maintenance.

### ③ Options

| Name | Option code | See page | Standard price |
|---|---|---|---|
| Brake | **B** | → A-42 | — |
| CE compliance | **CE** | → A-42 | — |
| Connector cable exits (left) | **K1** | → A-51 | — |
| Connector cable exits (front) | **K2** | → A-51 | — |
| Connector cable exits (right) | **K3** | → A-51 | — |

### Actuator Specifications

| Item | Description |
|---|---|
| Drive System | Ball screw, ø8mm, rolled C10 |
| Lost Motion | 0.1mm or less |
| Frame | Material: Aluminum, white alumite treated |
| Ambient operating temperature, humidity | 0 to 40°C, 85% RH or less (Non-condensing) |
| Service life | 5,000km or 50 million cycles |

## Dimensional Drawings

CAD drawings can be downloaded from the website. www.intelligentactuator.com

For Special Orders Appendix P.15

2D CAD 3D CAD

(*1) Connect the motor and encoder cables here. See page A-59 for details on cables.
(*2) After homing, the slider moves to the ME, therefore, please watch for any interference with surrounding objects.
ME : Mechanical end SE : Stroke end

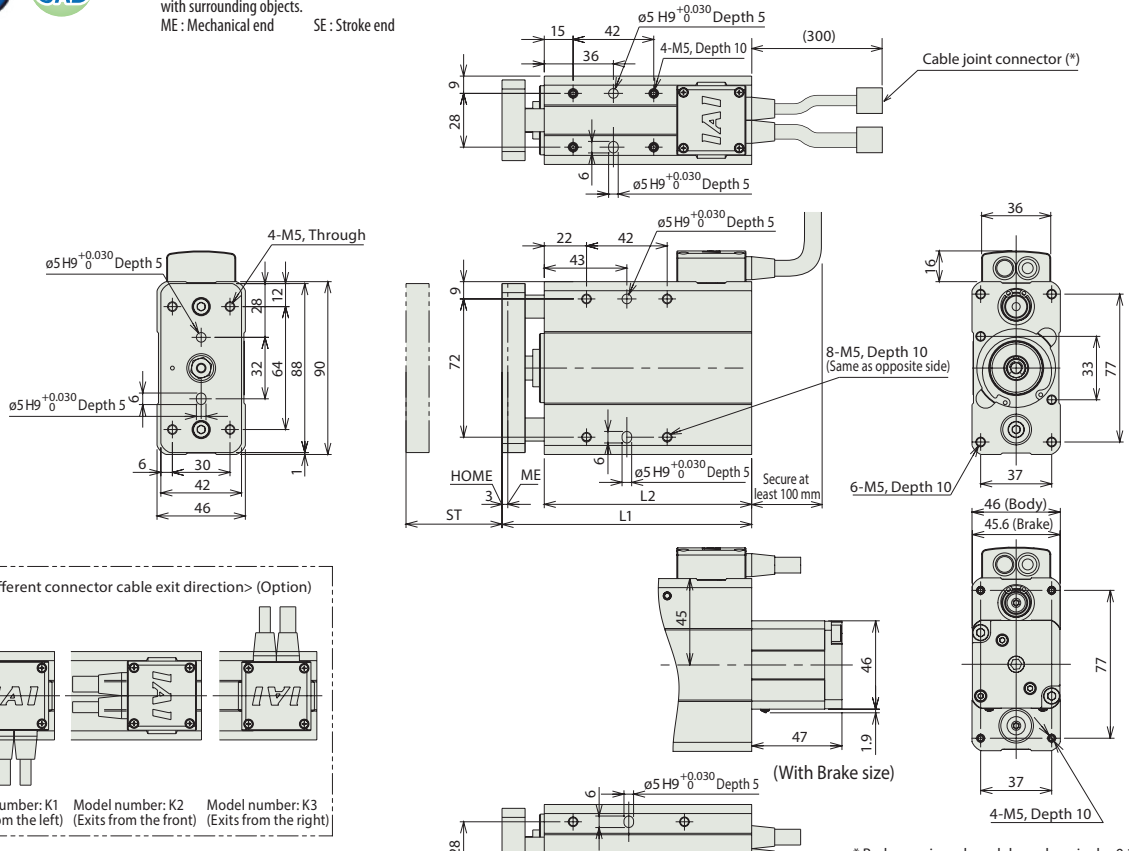


<Different connector cable exit direction> (Option)

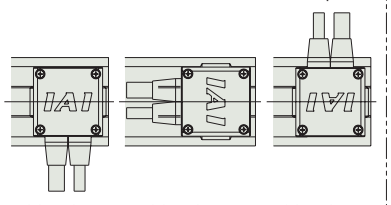

Model number: K1 (Exits from the left) Model number: K2 (Exits from the front) Model number: K3 (Exits from the right)

* Brake-equipped models are heavier by 0.26kg.

### Dimensions and Weight by Stroke

| Stroke | 50 | 75 |
|---|---|---|
| L1 | 130 | 155 |
| L2 | 108 | 133 |
| Weight (kg) | 1.6 | 1.9 |

## Applicable Controllers

RCS2 series actuators can be operated with the controllers indicated below. Select the type according to your intended application.

| Name | External view | Model number | Features | Maximum number of positioning points | Input power | Power-supply capacity | Standard price | Reference page |
|---|---|---|---|---|---|---|---|---|
| Positioner Type | | SCON-CA-60I-NP-2-Ⓘ | Up to 512 positioning points are supported | 512 points | Single-phase 100 VAC<br>Single-phase 200 VAC<br>3-phase 200 VAC (XSEL-P/Q only) | 218 VA max.<br>* Varies depending on the controller. Refer to the operation manual for details. | — | → P643 |
| Solenoid mode | | | Can be operated with the same controls used for solenoid valves | 7 points | | | | |
| Network mode | | | Can be moved by direct numerical specification | 768 points | | | | |
| Pulse-train input control mode | | | Can be controlled using pulse trains | (—) | | | — | |
| Program control type 1 or 2 axes | | SSEL-CS-1-60I-NP-2-Ⓘ | Program operation is supported<br>Up to two axes can be operated | 20,000 points | | | — | → P685 |
| Program control type 1 or 6 axes | | XSEL-Ⓘ-1-60I-N1-EEE-2-3 | Program operation is supported<br>Up to six axes can be operated | 20,000 points | | | — | → P695 |

* The values of SSEL and XSEL assume a 1-axis specification. * Ⓘ indicates the type of power-supply voltage (1: 100 V/2: Single-phase 200 V). * Ⓘ indicates the XSEL type (P/Q).

(Note) The incremental specification of this model can not be connected to XSEL-J/K, 5 and 6-axis types of XSEL-P/Q, XSEL-R/S, MSCON, and SCON-CAL/CGAL.

Slider Type
Mini
Standard
Controllers Integrated
Rod Type
Mini
Standard
Controllers Integrated
Table/ Arm/ Flat Type
Mini
Standard
Gripper/ Rotary Type
Linear Servo Type
Clean-room Type
Splash-Proof Type
Pulse Motor
Servo Motor (24V)
Servo Motor (200V)
Linear Servo Motor

# RCS2-SD5N

Robo Cylinder, Mini Rod Type, Short-Length Double-Guide Slide Unit Type, Actuator Width 94mm, 200V Servo Motor, Ball Screw Specification

**Model Specification Items**

| RCS2 | SD5N | I | 60 | ☐ | ☐ | T2 | ☐ | ☐ |
|---|---|---|---|---|---|---|---|---|
| Series | Type | Encoder type | Motor type | Lead | Stroke | Applicable controller | Cable length | Options |
| | | I:Incremental specification | 60: 60W Servo motor | 10 : 10mm<br>5 : 5mm<br>2.5: 2.5mm | 50: 50mm<br>75: 75mm | T2: SCON-CA<br>SSEL<br>XSEL-P/Q | N: None<br>P: 1m<br>S: 3m<br>M: 5m<br>X□□: Custom Length<br>R□□: Robot Cable | See options below. |

* See page Pre-47 for details on the model descriptions.

CE RoHS
*CE compliance is optional.

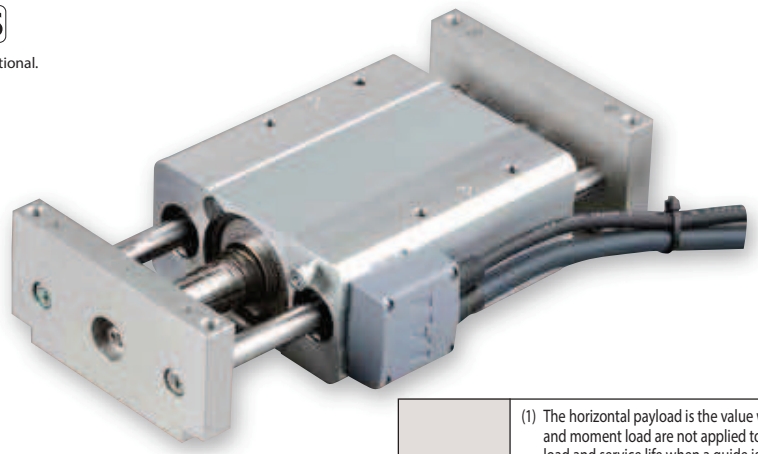

Technical References Appendix P.5

**POINT Notes on selection**

(1) The horizontal payload is the value when used in combination with a guide so that a radial load and moment load are not applied to the rod. See page A-111 for correlation diagrams of the end load and service life when a guide is not installed.
(2) The payload is the value when the actuator is operated at an acceleration of 0.3 G (0.2G for 2.5mm-lead) horizontally and 0.2G vertically. The acceleration limit is the value indicated above.
(3) The vertical payload is the value when the acuator is mounted and side bracket is operated. Take note that in vertical operation, the side bracket cannot be mounted to operate the actuator.
(4) If the actuator is used vertically, pay attention to rod contact because the rod will come down when the power is turned off.
(5) See page A-71 for details on push motion.

## Actuator Specifications

### Leads and Payloads

| Model number | Motor output (W) | Feed screw | Lead (mm) | Max. Load Capacity Horizontal (kg) | Max. Load Capacity Vertical (kg) | Rated thrust (N) | Positioning Repeatability (mm) | Stroke (mm) |
|---|---|---|---|---|---|---|---|---|
| RCS2-SD5N-I-60-10-①-T2-②-③ | 60 | Ball screw | 10 | 5 | 1.5 | 89 | ±0.02 | 50<br>75 |
| RCS2-SD5N-I-60-5-①-T2-②-③ | | | 5 | 10 | 3 | 178 | | |
| RCS2-SD5N-I-60-2.5-①-T2-②-③ | | | 2.5 | 20 | 6 | 356 | | |

Code explanation ① Stroke ② Cable length ③ Options *See page A-71 for details on push motion.

### Stroke and Maximum Speed

| Lead \ Stroke | 50 (mm) | 75 (mm) |
|---|---|---|
| 10 | 280 <230> | 380 <330> |
| 5 | 250 <230> | 250 |
| 2.5 | 125 | |

* The values enclosed in < > apply to vertical settings.

(Unit: mm/s)

### ① Stroke

| Stroke (mm) | Standard price |
|---|---|
| 50 | — |
| 75 | — |

### ② Cable Length

| Type | Cable symbol | Standard Price |
|---|---|---|
| Standard | **P** (1m) | — |
| | **S** (3m) | — |
| | **M** (5m) | — |
| Special length | **X06** (6m) ~ **X10** (10m) | — |
| | **X11** (11m) ~ **X15** (15m) | — |
| | **X16** (16m) ~ **X20** (20m) | — |
| Robot Cable | **R01** (1m) ~ **R03** (3m) | — |
| | **R04** (4m) ~ **R05** (5m) | — |
| | **R06** (6m) ~ **R10** (10m) | — |
| | **R11** (11m) ~ **R15** (15m) | — |
| | **R16** (16m) ~ **R20** (20m) | — |

* See page A-59 for cables for maintenance.

### ③ Options

| Name | Option code | See page | Standard price |
|---|---|---|---|
| CE compliance | **CE** | → A-42 | — |
| Connector cable exits (left) | **K1** | → A-51 | — |
| Connector cable exits (right) | **K3** | → A-51 | — |

### Actuator Specifications

| Item | Description |
|---|---|
| Drive System | Ball screw, ø8mm, rolled C10 |
| Lost Motion | 0.1mm or less |
| Frame | Material: Aluminum, white alumite treated |
| Ambient operating temperature, humidity | 0 to 40°C, 85% RH or less (Non-condensing) |
| Service life | 5,000km or 50 million cycles |

## Dimensional Drawings

CAD drawings can be downloaded from the website. www.intelligentactuator.com

For Special Orders Appendix P.15

2D CAD 3D CAD

(*1) Connect the motor-encoder integrated cable here. See page A-59 for details on cables.
(*2) After homing, the slider moves to the ME, therefore, please watch for any interference with surrounding objects.
ME : Mechanical end SE : Stroke end

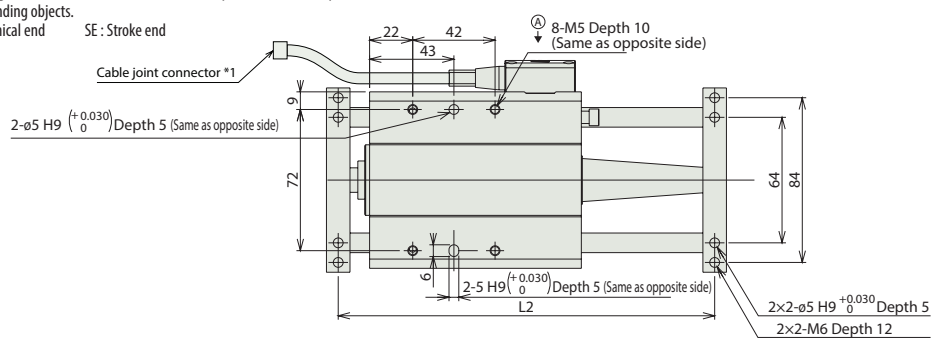


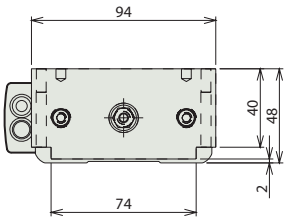


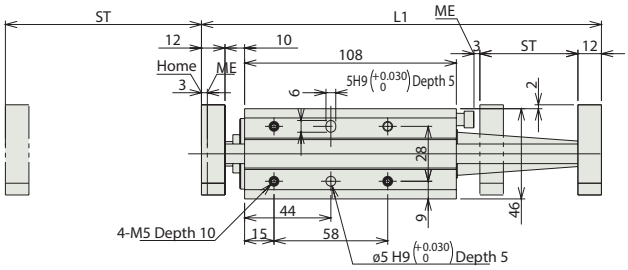


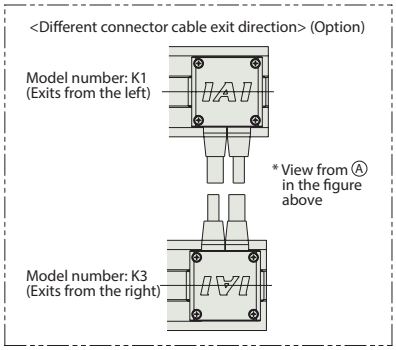


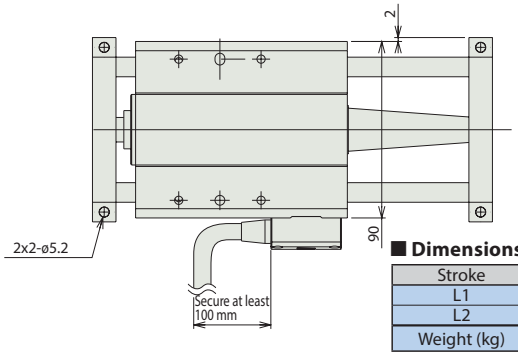


### Dimensions and Weight by Stroke

| Stroke | 50 | 75 |
|---|---|---|
| L1 | 204 | 229 |
| L2 | 192 | 217 |
| Weight (kg) | 1.9 | 1.94 |

## Applicable Controllers

RCS2 series actuators can be operated with the controllers indicated below. Select the type according to your intended application.

| Name | External view | Model number | Features | Maximum number of positioning points | Input power | Power-supply capacity | Standard price | Reference page |
|---|---|---|---|---|---|---|---|---|
| Positioner Type | | SCON-CA-60I-NP-2-Ⓘ | Up to 512 positioning points are supported | 512 points | Single-phase 100 VAC<br>Single-phase 200 VAC<br>3-phase 200 VAC (XSEL-P/Q only) | 218 VA max.<br>* Varies depending on the controller. Refer to the operation manual for details. | — | → P643 |
| Solenoid mode | | | Can be operated with the same controls used for solenoid valves | 7 points | | | | |
| Network mode | | | Can be moved by direct numerical specification | 768 points | | | | |
| Pulse-train input control mode | | | Can be controlled using pulse trains | (—) | | | — | |
| Program control type 1 or 2 axes | | SSEL-CS-1-60I-NP-2-Ⓘ | Program operation is supported<br>Up to two axes can be operated | 20,000 points | | | — | → P685 |
| Program control type 1 or 6 axes | | XSEL-Ⓘ-1-60I-N1-EEE-2-3 | Program operation is supported<br>Up to six axes can be operated | 20,000 points | | | — | → P695 |

* The values of SSEL and XSEL assume a 1-axis specification. * Ⓘ indicates the type of power-supply voltage (1: 100 V/2: Single-phase 200 V). * Ⓘ indicates the XSEL type (P/Q).

Please note that this model cannot be connected to the XSEL-P/Q type (5-axis/6-axis), XSEL-R/S type, or MSCON.

Slider Type
Mini
Standard
Controllers Integrated
Rod Type
Mini
Standard
Controllers Integrated
Table/ Arm/ Flat Type
Mini
Standard
Gripper/ Rotary Type
Linear Servo Type
Clean-room Type
Splash-Proof Type
Pulse Motor
Servo Motor (24V)
Servo Motor (200V)
Linear Servo Motor

# RCS2-RA4C

Robo Cylinder, Rod Type, ø37mm Diameter, 200V Servo Motor, Coupled

**Model Specification Items**

| RCS2 — | RA4C — | ☐ — | ☐ — | ☐ — | ☐ — | ☐ — | ☐ — | ☐ |
|---|---|---|---|---|---|---|---|---|
| Series | Type | Encoder type | Motor type | Lead | Stroke | Applicable controller | Cable length | Options |
| | | I : Incremental<br>A: Absoulute | 20:20W Servo motor<br>30:30W Servo motor | 12 :12mm<br>6 : 6mm<br>3 : 3mm | 50: 50mm<br>~<br>300: 300mm<br>(50mm pitch increments) | T1: XSEL-J/K<br>T2: SCON<br>MSCON<br>SSEL<br>XSEL-P/Q<br>XSEL-R/S | N: None<br>P: 1m<br>S: 3m<br>M: 5m<br>X☐☐: Custom Length<br>R☐☐: Robot Cable | See options below. |

* See page Pre-47 for details on the model descriptions.

CE RoHS
*CE compliance is optional.

**For High Acceleration/Deceleration** (*1)

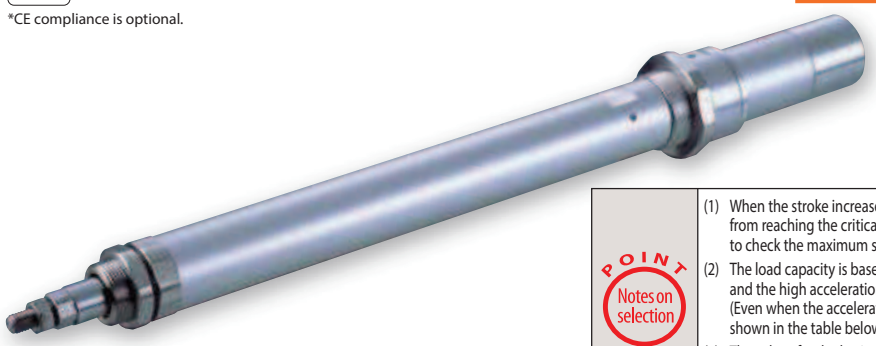

(*1) Except all 20W models and 30W 3mm lead models

Technical References — Appendix P.5

**POINT** Notes on selection

(1) When the stroke increases, the maximum speed will drop to prevent the ball screw from reaching the critical rotational speed. Use the actuator specification table below to check the maximum speed at the stroke you desire.
(2) The load capacity is based on operation of the standard model at 0.3G (0.2G for 3mm-lead), and the high acceleration/deceleration model at 1G (excluding the 3mm-lead model). (Even when the acceleration/deceleration is dropped, the maximum load capacity values shown in the table below are the upper limits.
(3) The values for the horizontal load capacity assume the use of an external guide, so that there is no external force from any direction other than the forward/backward direction of the rod.
(4) See page A-71 for details on push motion.

## Actuator Specifications

### Leads and Payloads

| Model number | Motor output (W) | Lead (mm) | Max. Load Capacity Horizontal (kg) | Max. Load Capacity Vertical (kg) | Rated thrust (N) | Stroke (mm) |
|---|---|---|---|---|---|---|
| RCS2-RA4C-①-20-12-②-③-④-⑤ | 20 | 12 | 3.0 | 1.0 | 18.9 | 50~300 (every 50mm) |
| RCS2-RA4C-①-20-6-②-③-④-⑤ | | 6 | 6.0 | 2.0 | 37.7 | |
| RCS2-RA4C-①-20-3-②-③-④-⑤ | | 3 | 12.0 | 4.0 | 75.4 | |
| RCS2-RA4C-①-30-12-②-③-④-⑤ | 30 | 12 | 4.0 | 1.5 | 28.3 | |
| RCS2-RA4C-①-30-6-②-③-④-⑤ | | 6 | 9.0 | 3.0 | 56.6 | |
| RCS2-RA4C-①-30-3-②-③-④-⑤ | | 3 | 18.0 | 6.5 | 113.1 | |

### Stroke and Maximum Speed

| Lead \ Stroke | 50~300 (every 50mm) |
|---|---|
| 12 | 600 |
| 6 | 300 |
| 3 | 150 |

(Unit: mm/s)

Code explanation ① Encoder ② Stroke ③ Applicable controller ④ Cable length ⑤ Options *See page A-71 for details on push motion.

## ①Encoder Type/②Stroke

| ②Stroke (mm) | Standard price ①Encoder Type Incremental Motor Output (W) 20W | Incremental 30W | Absolute Motor Output (W) 20W | Absolute 30W |
|---|---|---|---|---|
| 50 | — | — | — | — |
| 100 | — | — | — | — |
| 150 | — | — | — | — |
| 200 | — | — | — | — |
| 250 | — | — | — | — |
| 300 | — | — | — | — |

## ⑤Options

| Name | Option code | See page | Standard price |
|---|---|---|---|
| Brake | B | → A-42 | — |
| CE compliance | CE | → A-42 | — |
| Foot bracket | FT | → A-49 | — |
| Flange bracket (front) | FL | → A-45 | — |
| Flange bracket (back) | FLR | → A-47 | — |
| High-acceleration/deceleration (*1) | HA | → A-50 | — |
| Home sensor (*2) | HS | → A-50 | — |
| Knuckle joint | NJ | → A-53 | — |
| Non-motor end specification | NM | → A-52 | — |
| Trunnion bracket (front) | TRF | → A-57 | — |
| Trunnion bracket (back) | TRR | → A-58 | — |

(*1) The high-acceleration/deceleration option is not available for all 20W models and 30W model with 3mm lead.
(*2) The home sensor (HS) cannot be used on the non-motor end models.

## ④Cable Length

| Type | Cable symbol | Standard Price |
|---|---|---|
| Standard | **P** (1m) | — |
| | **S** (3m) | — |
| | **M** (5m) | — |
| Special length | **X06** (6m) ~ **X10** (10m) | — |
| | **X11** (11m) ~ **X15** (15m) | — |
| | **X16** (16m) ~ **X20** (20m) | — |
| Robot Cable | **R01** (1m) ~ **R03** (3m) | — |
| | **R04** (4m) ~ **R05** (5m) | — |
| | **R06** (6m) ~ **R10** (10m) | — |
| | **R11** (11m) ~ **R15** (15m) | — |
| | **R16** (16m) ~ **R20** (20m) | — |

* See page A-59 for cables for maintenance.

## Actuator Specifications

| Item | Description |
|---|---|
| Drive System | Ball screw, ø10mm, rolled C10 |
| Positioning Repeatability | ±0.02mm |
| Lost Motion | 0.1mm or less |
| Base | Material: Aluminum, white alumite treated |
| Rod diameter | ø20mm |
| Non-rotating accuracy of rod | ±1.0 deg |
| Ambient operating temperature, humidity | 0 to 40°C, 85% RH or less (Non-condensing) |

## Dimensional Drawings

CAD drawings can be downloaded from the website. www.intelligentactuator.com

For Special Orders Appendix P.15

2D CAD 3D CAD

(*1) Connect the motor and encoder cables here. See page A-59 for details on cables.
(*2) After homing, the slider moves to the ME, therefore, please watch for any interference with surrounding objects.
ME : Mechanical end SE : Stroke end
(*3) The orientation of the bolt varies depending on the product.

### [No Brake]

Note:
Do not apply any external force on the rod from any direction other than the direction of the rod's motion. If a force is exerted on the rod in a perpendicular or rotational direction,the detent may become damaged.

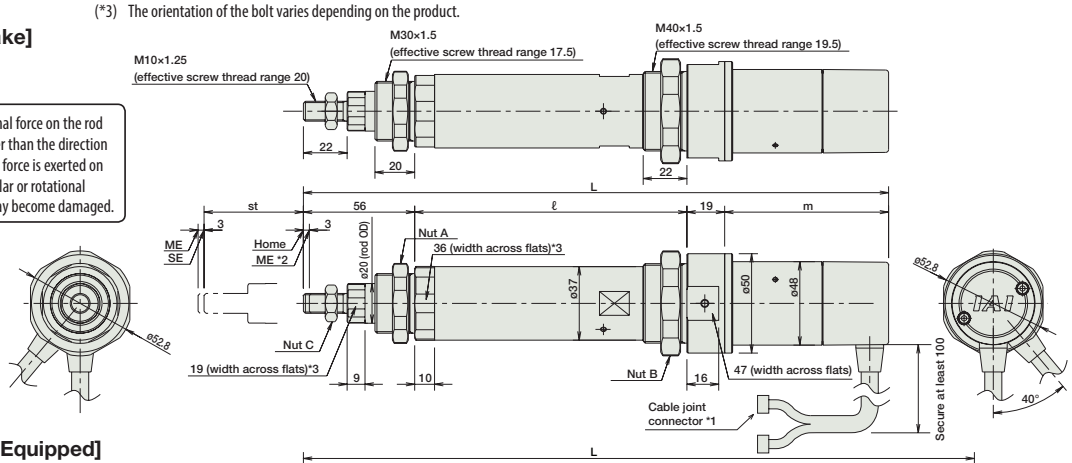


### [Brake-Equipped]

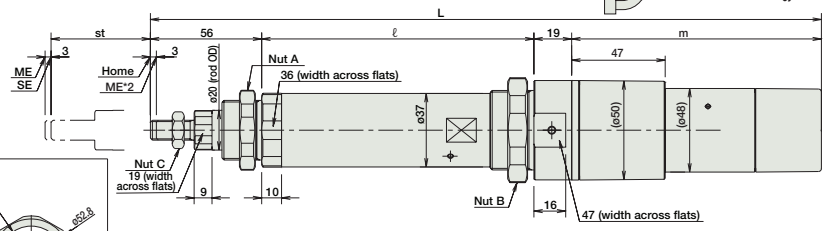


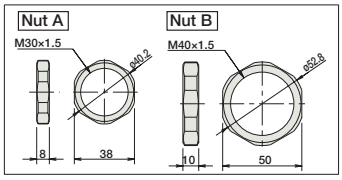


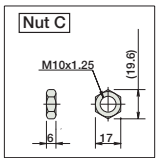


### ■ Dimensions and Weight by Stroke

**RCS2-RA4C (without brake)**

| Stroke | | 50 | 100 | 150 | 200 | 250 | 300 |
|---|---|---|---|---|---|---|---|
| L | 20W | 292.5 | 342.5 | 392.5 | 442.5 | 492.5 | 542.5 |
| | 30W | 307.5 | 357.5 | 407.5 | 457.5 | 507.5 | 557.5 |
| ℓ | | 137 | 187 | 237 | 287 | 337 | 487 |
| m | 20W | 80.5 | | | | | |
| | 30W | 95.5 | | | | | |
| Weight (kg) | | 1.1 | 1.2 | 1.4 | 1.5 | 1.7 | 1.8 |

**RCS2-RA4C (with brake)**

| Stroke | | 50 | 100 | 150 | 200 | 250 | 300 |
|---|---|---|---|---|---|---|---|
| L | 20W | 335.5 | 385.5 | 435.5 | 485.5 | 535.5 | 585.5 |
| | 30W | 350.5 | 400.5 | 450.5 | 500.5 | 550.5 | 600.5 |
| ℓ | | 137 | 187 | 237 | 287 | 337 | 487 |
| m | 20W | 123.5 | | | | | |
| | 30W | 138.5 | | | | | |
| Weight (kg) | | 1.3 | 1.5 | 1.6 | 1.7 | 1.9 | 2.0 |

## ③ Applicable Controllers

RCS2-series actuators can be operated with the following controllers. Select an appropriate controller type according to your application.

| Name | External view | Model number | Features | Maximum number of positioning points | Input power | Power supply capacity | Standard price | Reference page |
|---|---|---|---|---|---|---|---|---|
| Positioner mode | | SCON-CA-20Ⓘ-NP-2-Ⓘⓘ<br>SCON-CA-30DⒾ-NP-2-Ⓘⓘ | Up to 512 positioning points are supported. | 512 points | Single-phase 100VAC<br>Single-phase 200VAC<br>3-phase 200VAC (XSEL-P/Q/R/S ONLY) | 126 VA max.<br>*Power supply capacity will vary depending on the controller, so please refer to the instruction manual for details. | — | → P643 |
| Solenoid valve mode | | | Actuators can be operated through the same control used for solenoid valves. | 7 points | | | | |
| Field network type | | | Movement by numerical specification is supported. | 768 points | | | — | |
| Pulse-train input control type | | | Dedicated pulse-train input type | (—) | | | — | |
| Positioner multi-axis, network type | | MSCON-C-1-20Ⓘ-Ⓥ-0-Ⓘⓘ<br>MSCON-C-1-30DⒾ-Ⓥ-0-Ⓘⓘ | Up to 6 axes can be operated. Movement by numerical specification is supported. | 256 points | | | — | → P655 |
| Program control type, 1 to 2 axes | | SSEL-CS-1-20Ⓘ-NP-2-Ⓘⓘ<br>SSEL-CS-1-30DⒾ-NP-2-Ⓘⓘ | Program operation is supported. Up to 2 axes can be operated. | 20,000 points | | | — | → P685 |
| Program control type, 1 to 8 axes | | XSEL-Ⓘⓘ-1-20Ⓘ-N1-EEE-2-Ⓥ<br>XSEL-Ⓘⓘ-1-30DⒾ-N1-EEE-2-Ⓥ | Program operation is supported. Up to 8 axes can be operated. | Varies depending on the number of axes connected | | | — | → P695 |

* This is for the single-axis MSCON, SSEL, and XSEL.
* ⓘ indicates the power-supply voltage type (1: 100V / 2: Single-phase 200V).
* Ⓥ indicates the power-supply voltage type (1: 100 V / 2: Single-phase 200V / 3: Three-phase 200V).
* Ⓘ indicates the encoder type (I: Incremental / A: Absolute).
* ⓘⓘ indicates the XSEL type (J / K / P / Q / R / S).
* Ⓥ indicates field network specification symbol.

Slider Type
Mini
Standard
Controllers Integrated
Rod Type
Mini
Standard
Controllers Integrated
Table/ Arm/ Flat Type
Mini
Standard
Gripper/ Rotary Type
Linear Servo Type
Clean-room Type
Splash-Proof Type
Pulse Motor
Servo Motor (24V)
Servo Motor (200V)
Linear Servo Motor

# RCS2-RA5C

Robo Cylinder, Rod Type, Actuator Width 55mm, 200V Servo Motor, Coupled

**Model Specification Items**

| RCS2 — | RA5C — | ☐ — | ☐ — | ☐ — | ☐ — | ☐ — | ☐ — | ☐ |
|---|---|---|---|---|---|---|---|---|
| Series | Type | Encoder type | Motor type | Lead | Stroke | Applicable controller | Cable length | Options |
| | | I : Incremental<br>A: Absoulute | 60 : 60W Servo motor<br>100 : 100W Servo motor | 16 :16mm<br>8 : 8mm<br>4 : 4mm | 50: 50mm<br>~<br>300: 300mm<br>(50mm pitch increments) | T1: XSEL-J/K<br>T2: SCON<br>MSCON<br>SSEL<br>XSEL-P/Q<br>XSEL-R/S | N: None<br>P: 1m<br>S: 3m<br>M: 5m<br>X□□: Custom Length<br>R□□: Robot Cable | See options below. |

* See page Pre-47 for details on the model descriptions.

CE RoHS
*CE compliance is optional.

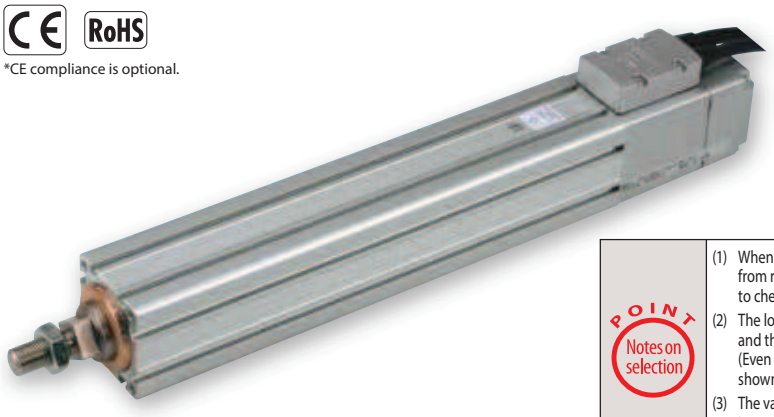

**For High Acceleration/Deceleration** (*1)

(*1) Except all 60W models and 100W 4mm lead models

Technical References — Appendix P.5

**POINT — Notes on selection**

(1) When the stroke increases, the maximum speed will drop to prevent the ball screw from reaching the critical rotational speed. Use the actuator specification table below to check the maximum speed at the stroke you desire.
(2) The load capacity is based on operation of the standard model at 0.3G (0.2G for 4mm-lead), and the high acceleration/deceleration model at 1G (0.2G for 4mm-lead). (Even when the acceleration/deceleration is dropped, the maximum load capacity values shown in the table below are the upper limits.
(3) The values for the horizontal load capacity assume the use of an external guide, so that there is no external force from any direction other than the forward/backward direction of the rod.
(4) See page A-71 for details on push motion.

## Actuator Specifications

### Leads and Payloads

| Model number | Motor output (W) | Lead (mm) | Max. Load Capacity Horizontal (kg) | Max. Load Capacity Vertical (kg) | Rated thrust (N) | Stroke (mm) |
|---|---|---|---|---|---|---|
| RCS2-RA5C-①-60-16-②-③-④-⑤ | 60 | 16 | 12.0 | 2.0 | 63.8 | 50~300 (every 50mm) |
| RCS2-RA5C-①-60-8-②-③-④-⑤ | | 8 | 25.0 | 5.0 | 127.5 | |
| RCS2-RA5C-①-60-4-②-③-④-⑤ | | 4 | 50.0 | 11.5 | 255.1 | |
| RCS2-RA5C-①-100-16-②-③-④-⑤ | 100 | 16 | 15.0 | 3.5 | 105.8 | |
| RCS2-RA5C-①-100-8-②-③-④-⑤ | | 8 | 30.0 | 9.0 | 212.7 | |
| RCS2-RA5C-①-100-4-②-③-④-⑤ | | 4 | 60.0 | 18.0 | 424.3 | |

Code explanation ① Encoder ② Stroke ③ Applicable controller ④ Cable length ⑤ Options *See page A-71 for details on push motion.

### Stroke and Maximum Speed

| Lead \ Stroke | 50~250 (every 50mm) | 300 (mm) |
|---|---|---|
| 16 | 800 | 755 |
| 8 | 400 | 377 |
| 4 | 200 | 188 |

(Unit: mm/s)

### ①Encoder Type/②Stroke

| ②Stroke (mm) | Standard price ①Encoder Type Incremental Motor Output (W) 60W | Incremental 100W | Absolute Motor Output (W) 60W | Absolute 100W |
|---|---|---|---|---|
| 50 | — | — | — | — |
| 100 | — | — | — | — |
| 150 | — | — | — | — |
| 200 | — | — | — | — |
| 250 | — | — | — | — |
| 300 | — | — | — | — |

### ④Cable Length

| Type | Cable symbol | Standard Price |
|---|---|---|
| Standard | **P** (1m) | — |
| | **S** (3m) | — |
| | **M** (5m) | — |
| Special length | **X06** (6m) ~ **X10** (10m) | — |
| | **X11** (11m) ~ **X15** (15m) | — |
| | **X16** (16m) ~ **X20** (20m) | — |
| Robot Cable | **R01** (1m) ~ **R03** (3m) | — |
| | **R04** (4m) ~ **R05** (5m) | — |
| | **R06** (6m) ~ **R10** (10m) | — |
| | **R11** (11m) ~ **R15** (15m) | — |
| | **R16** (16m) ~ **R20** (20m) | — |

* See page A-59 for cables for maintenance.

### ⑤Options

| Name | Option code | See page | Standard price |
|---|---|---|---|
| Connector cable exit direction | **A2** | → A-41 | |
| Brake | **B** | → A-42 | — |
| CE compliance | **CE** | → A-42 | — |
| Flange bracket | **FL** | → A-45 | — |
| Foot bracket | **FT** | → A-49 | — |
| High-acceleration/deceleration (*1) | **HA** | → A-50 | — |

(*1) The high-acceleration/deceleration option is not available for all 60W models and100W model with 4mm lead.

### Actuator Specifications

| Item | Description |
|---|---|
| Drive System | Ball screw, ø12mm, rolled C10 |
| Positioning Repeatability | ±0.02mm |
| Lost Motion | 0.1mm or less |
| Base | Material: Aluminum, white alumite treated |
| Rod diameter | ø30mm |
| Non-rotating accuracy of rod | ±0.7 deg |
| Ambient operating temperature, humidity | 0 to 40°C, 85% RH or less (Non-condensing) |

## Dimensional Drawings

CAD drawings can be downloaded from the website. www.intelligentactuator.com

2D CAD 3D CAD

*The RA5C is not available in non-motor end configuration, due to its construction.

For Special Orders Appendix P.15

(*1) Connect the motor and encoder cables here. See page A-59 for details on cables.
(*2) After homing, the slider moves to the ME, therefore, please watch for any interference with surrounding objects.
ME : Mechanical end SE : Stroke end
(*3) The orientation of the bolt varies depending on the product.

Note:
Do not apply any external force on the rod from any direction other than the direction of the rod's motion. If a force is exerted on the rod in a perpendicular or rotational direction,the detent may become damaged.

### [No Brake]

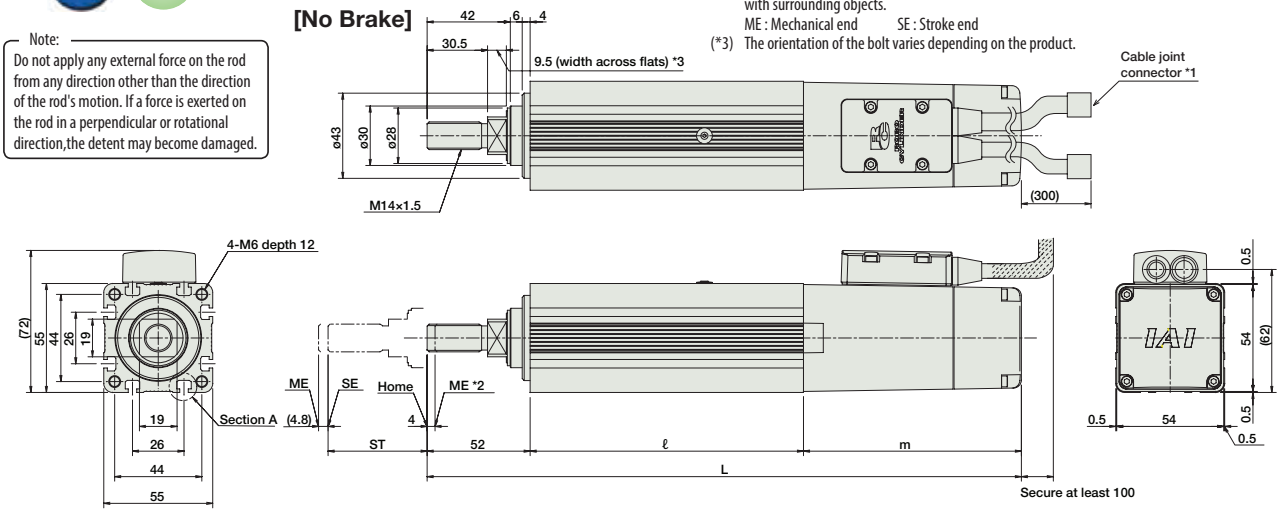


### [Brake-Equipped]

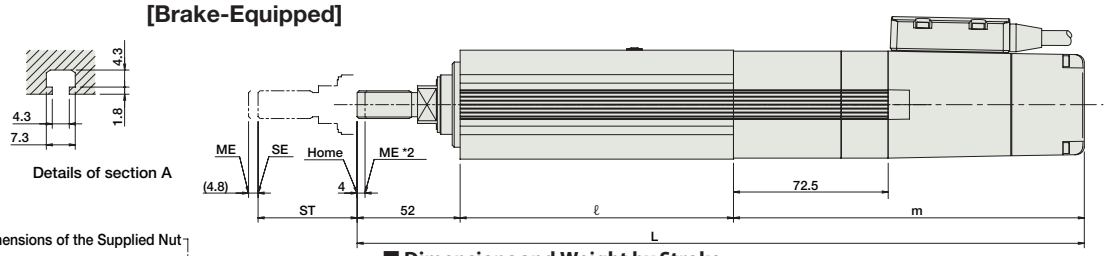


Dimensions of the Supplied Nut

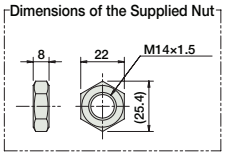


### ■ Dimensions and Weight by Stroke

**RCS2-RA5C (without brake)**

| Stroke | | 50 | 100 | 150 | 200 | 250 | 300 |
|---|---|---|---|---|---|---|---|
| L | 60W | 282 | 332 | 382 | 432 | 482 | 532 |
| | 100W | 300 | 350 | 400 | 450 | 500 | 550 |
| ℓ | | 138 | 188 | 238 | 288 | 338 | 388 |
| m | 60W | 92 | | | | | |
| | 100W | 110 | | | | | |
| Weight (kg) | | 1.9 | 2.2 | 2.5 | 2.8 | 3.1 | 3.4 |

**RCS2-RA5C (with brake)**

| Stroke | | 50 | 100 | 150 | 200 | 250 | 300 |
|---|---|---|---|---|---|---|---|
| L | 60W | 354.5 | 404.5 | 454.5 | 504.5 | 554.5 | 604.5 |
| | 100W | 372.5 | 422.5 | 472.5 | 522.5 | 572.5 | 622.5 |
| ℓ | | 138 | 188 | 238 | 288 | 338 | 388 |
| m | 60W | 164.5 | | | | | |
| | 100W | 182.5 | | | | | |
| Weight (kg) | | 2.2 | 2.5 | 2.8 | 3.1 | 3.4 | 3.7 |

## ③ Applicable Controllers

RCS2-series actuators can be operated with the following controllers. Select an appropriate controller type according to your application.

| Name | External view | Model number | Features | Maximum number of positioning points | Input power | Power supply capacity | Standard price | Reference page |
|---|---|---|---|---|---|---|---|---|
| Positioner mode | | SCON-CA-60Ⓘ-NP-2-Ⓘⓘ<br>SCON-CA-100Ⓘ-NP-2-Ⓘⓘ | Up to 512 positioning points are supported. | 512 points | Single-phase 100VAC<br>Single-phase 200VAC<br>3-phase 200VAC (XSEL-P/Q/R/S ONLY) | 314 VA max.<br>*Power supply capacity will vary depending on the controller, so please refer to the instruction manual for details. | — | → P643 |
| Solenoid valve mode | | | Actuators can be operated through the same control used for solenoid valves. | 7 points | | | | |
| Field network type | | | Movement by numerical specification is supported. | 768 points | | | — | |
| Pulse-train input control type | | | Dedicated pulse-train input type | (—) | | | — | |
| Positioner multi-axis, network type | | MSCON-C-1-60Ⓘ-Ⓥ-0-Ⓘⓘ<br>MSCON-C-1-100Ⓘ-Ⓥ-0-Ⓘⓘ | Up to 6 axes can be operated. Movement by numerical specification is supported. | 256 points | | | — | → P655 |
| Program control type, 1 to 2 axes | | SSEL-CS-1-60Ⓘ-NP-2-Ⓘⓘ<br>SSEL-CS-1-100Ⓘ-NP-2-Ⓘⓘ | Program operation is supported. Up to 2 axes can be operated. | 20,000 points | | | — | → P685 |
| Program control type, 1 to 8 axes | | XSEL-Ⓘⓘⓘ-1-60Ⓘ-N1-EEE-2-Ⓥ<br>XSEL-Ⓘⓘⓘ-1-100Ⓘ-N1-EEE-2-Ⓥ | Program operation is supported. Up to 8 axes can be operated. | Varies depending on the number of axes connected | | | — | → P695 |

* This is for the single-axis MSCON, SSEL, and XSEL.
* ⓘⓘ indicates the power-supply voltage type (1: 100V / 2: Single-phase 200V).
* Ⓥ indicates the power-supply voltage type (1: 100 V / 2: Single-phase 200V / 3: Three-phase 200V).
* Ⓘ indicates the encoder type (I: Incremental / A: Absolute).
* ⓘⓘⓘ indicates the XSEL type (J / K / P / Q / R / S).
* Ⓥ indicates field network specification symbol.

Slider Type
Mini
Standard
Controllers Integrated
Rod Type
Mini
Standard
Controllers Integrated
Table/ Arm/ Flat Type
Mini
Standard
Gripper/ Rotary Type
Linear Servo Type
Clean-room Type
Splash-Proof Type
Pulse Motor
Servo Motor (24V)
Servo Motor (200V)
Linear Servo Motor

# RCS2-RA4D

Robo Cylinder, Rod Type, ø37mm Diameter, 200V Servo Motor, Built-in (Direct-Coupled) Motor

Model Specification Items

| RCS2 | RA4D | ☐ | ☐ | ☐ | ☐ | ☐ | ☐ | ☐ |
|---|---|---|---|---|---|---|---|---|
| Series | Type | Encoder type | Motor type | Lead | Stroke | Applicable controller | Cable length | Options |
| | | I : Incremental<br>A: Absoulute | 20 : 20W Servo motor<br>30 : 30W Servo motor | 12 :12mm<br>6 : 6mm<br>3 : 3mm | 50: 50mm<br>~<br>300: 300mm<br>(50mm pitch increments) | T1: XSEL-J/K<br>T2: SCON<br>MSCON<br>SSEL<br>XSEL-P/Q<br>XSEL-R/S | N: None<br>P: 1m<br>S: 3m<br>M: 5m<br>X□□: Custom Length<br>R□□: Robot Cable | See options below. |

* See page Pre-47 for details on the model descriptions.

CE RoHS
*CE compliance is optional.

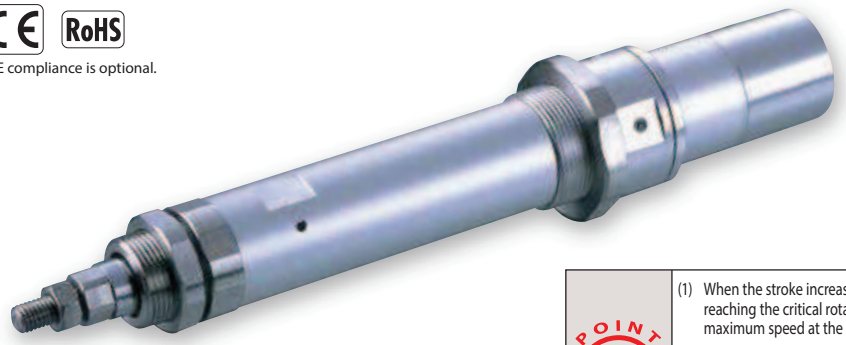

Technical References Appendix P.5

POINT Notes on selection

(1) When the stroke increases, the maximum speed will drop to prevent the ball screw from reaching the critical rotational speed. Use the actuator specification table below to check the maximum speed at the stroke you desire.
(2) The load capacity is based on operation at an acceleration of 0.3G (0.2G for 3mm-lead model), This is the upper limit of the acceleration.
(3) The values for the horizontal load capacity assume the use of an external guide, so that there is no external force from any direction other than the forward/backward direction of the rod.
(4) See page A-71 for details on push motion.

## Actuator Specifications

### Leads and Payloads

| Model number | Motor output (W) | Lead (mm) | Max. Load Capacity Horizontal (kg) | Max. Load Capacity Vertical (kg) | Rated thrust (N) | Stroke (mm) |
|---|---|---|---|---|---|---|
| RCS2-RA4D-①-20-12-②-③-④-⑤ | 20 | 12 | 3.0 | 1.0 | 18.9 | 50~300 (every 50mm) |
| RCS2-RA4D-①-20-6-②-③-④-⑤ | | 6 | 6.0 | 2.0 | 37.7 | |
| RCS2-RA4D-①-20-3-②-③-④-⑤ | | 3 | 12.0 | 4.0 | 75.4 | |
| RCS2-RA4D-①-30-12-②-③-④-⑤ | 30 | 12 | 4.0 | 1.5 | 28.3 | |
| RCS2-RA4D-①-30-6-②-③-④-⑤ | | 6 | 9.0 | 3.0 | 56.6 | |
| RCS2-RA4D-①-30-3-②-③-④-⑤ | | 3 | 18.0 | 6.5 | 113.1 | |

### Stroke and Maximum Speed

| Lead \ Stroke | 50~300 (every 50mm) |
|---|---|
| 12 | 600 |
| 6 | 300 |
| 3 | 150 |

(Unit: mm/s)

Code explanation ① Encoder ② Stroke ③ Applicable controller ④ Cable length ⑤ Options *See page A-71 for details on push motion.

## ①Encoder Type/②Stroke

| ②Stroke (mm) | Standard price ①Encoder Type Incremental Motor Output (W) 20W | Incremental 30W | Absolute Motor Output (W) 20W | Absolute 30W |
|---|---|---|---|---|
| 50 | — | — | — | — |
| 100 | — | — | — | — |
| 150 | — | — | — | — |
| 200 | — | — | — | — |
| 250 | — | — | — | — |
| 300 | — | — | — | — |

## ④Cable Length

| Type | Cable symbol | Standard Price |
|---|---|---|
| Standard | **P** (1m) | — |
| | **S** (3m) | — |
| | **M** (5m) | — |
| Special length | **X06** (6m) ~ **X10** (10m) | — |
| | **X11** (11m) ~ **X15** (15m) | — |
| | **X16** (16m) ~ **X20** (20m) | — |
| Robot Cable | **R01** (1m) ~ **R03** (3m) | — |
| | **R04** (4m) ~ **R05** (5m) | — |
| | **R06** (6m) ~ **R10** (10m) | — |
| | **R11** (11m) ~ **R15** (15m) | — |
| | **R16** (16m) ~ **R20** (20m) | — |

* See page A-59 for cables for maintenance.

## ⑤Options

| Name | Option code | See page | Standard price |
|---|---|---|---|
| CE compliance | **CE** | → A-42 | — |
| Foot bracket | **FT** | → A-49 | — |
| Flange bracket (front) | **FL** | → A-45 | — |
| Flange bracket (back) | **FLR** | → A-46 | — |
| Home sensor | **HS** | → A-50 | — |
| Knuckle joint | **NJ** | → A-53 | — |
| Non-motor end specification | **NM** | → A-52 | — |
| Trunnion bracket (front) | **TRF** | → A-57 | — |
| Trunnion bracket (back) | **TRR** | → A-58 | — |

*The home sensor (HS) cannot be used on the non-motor end models.

## Actuator Specifications

| Item | Description |
|---|---|
| Drive System | Ball screw, ø10mm, rolled C10 |
| Positioning Repeatability | ±0.02mm |
| Lost Motion | 0.1mm or less |
| Base | Material: Aluminum, white alumite treated |
| Rod diameter | ø20mm |
| Non-rotating accuracy of rod | ±1.0 deg |
| Ambient operating temperature, humidity | 0 to 40°C, 85% RH or less (Non-condensing) |

## Dimensional Drawings

CAD drawings can be downloaded from the website. www.intelligentactuator.com

For Special Orders Appendix P.15

2D CAD

**[No Brake]**

(*1) Connect the motor and encoder cables here. See page A-59 for details on cables.
(*2) After homing, the slider moves to the ME, therefore, please watch for any interference with surrounding objects.
ME : Mechanical end SE : Stroke end
(*3) The orientation of the bolt varies depending on the product.

Note:
Do not apply any external force on the rod from any direction other than the direction of the rod's motion. If a force is exerted on the rod in a perpendicular or rotational direction,the detent may become damaged.

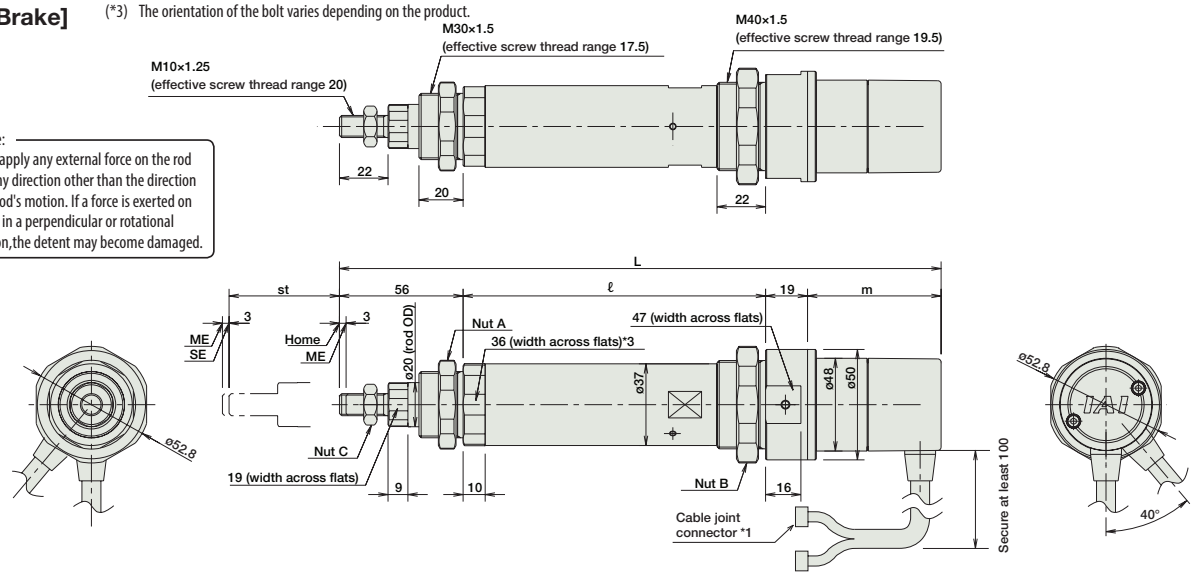


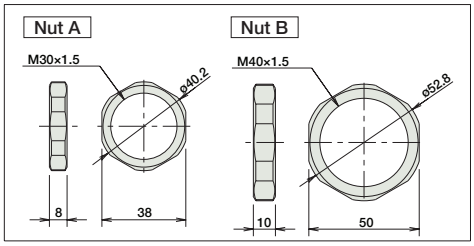


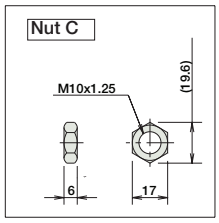


### ■ Dimensions and Weight by Stroke

**RCS2-RA4D (without brake)**

| Stroke | | 50 | 100 | 150 | 200 | 250 | 300 |
|---|---|---|---|---|---|---|---|
| L | 20W | 270.5 | 320.5 | 370.5 | 420.5 | 470.5 | 520.5 |
| | 30W | 285.5 | 335.5 | 385.5 | 435.5 | 485.5 | 535.5 |
| ℓ | | 137 | 187 | 237 | 287 | 337 | 487 |
| m | 20W | 58.5 | | | | | |
| | 30W | 73.5 | | | | | |
| Weight (kg) | | 1.0 | 1.2 | 1.3 | 1.5 | 1.6 | 1.8 |

RCS2-RA4D models are not equipped with a brake.

## ③ Applicable Controllers

RCS2-series actuators can be operated with the following controllers. Select an appropriate controller type according to your application.

| Name | External view | Model number | Features | Maximum number of positioning points | Input power | Power supply capacity | Standard price | Reference page |
|---|---|---|---|---|---|---|---|---|
| Positioner mode | | SCON-CA-20Ⓘ-NP-2-Ⅱ<br>SCON-CA-30DⒾ-NP-2-Ⅱ | Up to 512 positioning points are supported. | 512 points | Single-phase 100VAC<br>Single-phase 200VAC<br>3-phase 200VAC (XSEL-P/Q/R/S ONLY) | 126 VA max.<br>*Power supply capacity will vary depending on the controller, so please refer to the instruction manual for details. | — | → P643 |
| Solenoid valve mode | | | Actuators can be operated through the same control used for solenoid valves. | 7 points | | | | |
| Field network type | | | Movement by numerical specification is supported. | 768 points | | | — | |
| Pulse-train input control type | | | Dedicated pulse-train input type | (—) | | | — | |
| Positioner multi-axis, network type | | MSCON-C-1-20Ⓘ-Ⓥ-0-Ⅱ<br>MSCON-C-1-30DⒾ-Ⓥ-0-Ⅱ | Up to 6 axes can be operated. Movement by numerical specification is supported. | 256 points | | | — | → P655 |
| Program control type, 1 to 2 axes | | SSEL-CS-1-20Ⓘ-NP-2-Ⅱ<br>SSEL-CS-1-30DⒾ-NP-2-Ⅱ | Program operation is supported. Up to 2 axes can be operated. | 20,000 points | | | — | → P685 |
| Program control type, 1 to 8 axes | | XSEL-Ⅲ-1-20Ⓘ-N1-EEE-2-Ⓥ<br>XSEL-Ⅲ-1-30DⒾ-N1-EEE-2-Ⓥ | Program operation is supported. Up to 8 axes can be operated. | Varies depending on the number of axes connected | | | — | → P695 |

* This is for the single-axis MSCON, SSEL, and XSEL.
* Ⅱ indicates the power-supply voltage type (1: 100V / 2: Single-phase 200V).
* Ⓥ indicates the power-supply voltage type (1: 100 V / 2: Single-phase 200V / 3: Three-phase 200V).
* Ⓘ indicates the encoder type (I: Incremental / A: Absolute).
* Ⅲ indicates the XSEL type (J / K / P / Q / R / S).
* Ⓥ indicates field network specification symbol.

Slider Type
Mini
Standard
Controllers Integrated
Rod Type
Mini
Standard
Controllers Integrated
Table/ Arm/ Flat Type
Mini
Standard
Gripper/ Rotary Type
Linear Servo Type
Clean-room Type
Splash-Proof Type
Pulse Motor
Servo Motor (24V)
Servo Motor (200V)
Linear Servo Motor

# RCS2-SRA7BD

Robo Cylinder, Rod Type, Actuator Width 75mm, 200V Servo Motor, Short-Length Type

**Model Specification Items**

| RCS2 | SRA7BD | I | ☐ | ☐ | ☐ | ☐ | ☐ | ☐ |
|---|---|---|---|---|---|---|---|---|
| Series | Type | Encoder type | Motor type | Lead | Stroke | Applicable controller | Cable length | Options |
| | | I : Incremental | 60 : 60W Servo motor<br>100 : 100W Servo motor<br>150 : 150W Servo Motor | 16 : 16mm<br>8 : 8mm<br>4 : 4mm | 50: 50mm<br>~<br>300: 300mm<br>(50mm pitch increments) | T1: XSEL-J/K<br>T2: SCON<br>SSEL<br>XSEL-P/Q | N: None<br>P: 1m<br>S: 3m<br>M: 5m<br>X□□: Custom Length<br>R□□: Robot Cable | See options below. |

* See page Pre-47 for details on the model descriptions.

RoHS

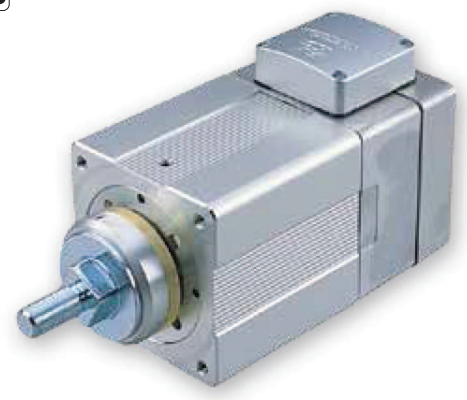

Technical References Appendix P.5

**POINT — Notes on selection**

(1) When operated at the rated acceleration, the maximum load capacity is the load capacity at the rated acceleration.
(2) When operated at the maximum acceleration, the maximum load capacity is the load capacity at the maximum acceleration.
(3) If positioning repeatability and/or lost motion is required, the rotation of the rod must be restricted. In this case, select a model with a guide, or add a separate guide.
(4) The standard model may exhibit vibration of the rod at long strokes. If this is an issue, select a model with a guide, or add a separate guide.
(5) The values for the horizontal load capacity reflect the use of an external guide.
(6) See page A-71 for details on push motion.

## Actuator Specifications

### Leads and Payloads

| Model number | Motor output (W) | Lead (mm) | Rated Acceleration (G) | Load Capacity at Rated Acceleration Horizontal (kg) | Load Capacity at Rated Acceleration Vertical (kg) | Max Acceleration (G) | Load Capacity at Max. Acceleration Horizontal (kg) | Load Capacity at Max. Acceleration Vertical (kg) | Rated thrust (N) | Stroke (mm) |
|---|---|---|---|---|---|---|---|---|---|---|
| RCS2-SRA7BD-I-60-16-①-②-③-④ | 60 | 16 | 0.25 | 5 | 2 | 0.35 | 2.5 | 1 | 63 | 50~300 (every 50mm) |
| RCS2-SRA7BD-I-60-8-①-②-③-④ | | 8 | 0.15 | 10 | 5 | 0.25 | 5 | 2.5 | 127 | |
| RCS2-SRA7BD-I-60-4-①-②-③-④ | | 4 | 0.05 | 20 | 10 | 0.15 | 10 | 5 | 254 | |
| RCS2-SRA7BD-I-100-16-①-②-③-④ | 100 | 16 | 0.3 | 10 | 3.5 | 0.4 | 5 | 1.5 | 103 | |
| RCS2-SRA7BD-I-100-8-①-②-③-④ | | 8 | 0.2 | 22 | 9 | 0.3 | 10 | 4.5 | 207 | |
| RCS2-SRA7BD-I-100-4-①-②-③-④ | | 4 | 0.1 | 40 | 19.5 | 0.2 | 20 | 9 | 414 | |
| RCS2-SRA7BD-I-150-16-①-②-③-④ | 150 | 16 | 0.3 | 15 | 6.5 | 0.4 | 7.5 | 3 | 157 | |
| RCS2-SRA7BD-I-150-8-①-②-③-④ | | 8 | 0.2 | 35 | 14.5 | 0.3 | 17.5 | 7 | 314 | |
| RCS2-SRA7BD-I-150-4-①-②-③-④ | | 4 | 0.1 | 55 | 22.5 | 0.2 | 27.5 | 11 | 628 | |

Code explanation ① Stroke ② Applicable controller ③ Cable length ④ Options *The values for the horizontal load capacity reflect the use of an external guide. *See page A-71 for details on push motion.

### Stroke and Maximum Speed

| Lead \ Stroke | 50~300 (every 50mm) |
|---|---|
| 16 | 800 |
| 8 | 400 |
| 4 | 200 |

(Unit: mm/s)

### ① Stroke

| ①Stroke (mm) | Standard price Motor Output (W) 60W | 100W | 150W |
|---|---|---|---|
| 50 | — | — | — |
| 100 | — | — | — |
| 150 | — | — | — |
| 200 | — | — | — |
| 250 | — | — | — |
| 300 | — | — | — |

### ③ Cable Length

| Type | Cable symbol | Standard Price |
|---|---|---|
| Standard | **P** (1m) | — |
| | **S** (3m) | — |
| | **M** (5m) | — |
| Special length | **X06** (6m) ~ **X10** (10m) | — |
| | **X11** (11m) ~ **X15** (15m) | — |
| | **X16** (16m) ~ **X20** (20m) | — |
| Robot Cable | **R01** (1m) ~ **R03** (3m) | — |
| | **R04** (4m) ~ **R05** (5m) | — |
| | **R06** (6m) ~ **R10** (10m) | — |
| | **R11** (11m) ~ **R15** (15m) | — |
| | **R16** (16m) ~ **R20** (20m) | — |

* See page A-59 for cables for maintenance.

### ④ Options

| Name | Option code | See page | Standard price |
|---|---|---|---|
| Connector cable exit direction | **A1~A3** | → A-41 | — |
| Brake | **B** | → A-42 | — |
| Flange | **FL** | → A-45 | — |
| Foot bracket | **FT** | → A-49 | — |
| Extended rod tip | **RE** | → A-54 | — |

### Actuator Specifications

| Item | Description |
|---|---|
| Drive System | Ball screw, ø12mm, rolled C10 |
| Positioning Repeatability | ±0.02mm |
| Lost Motion | 0.1mm or less |
| Base | Material: Aluminum, white alumite treated |
| Rod diameter | ø35mm |
| Non-rotating accuracy of rod | — |
| Ambient operating temperature, humidity | 0 to 40°C, 85% RH or less (Non-condensing) |

## Dimensional Drawings

CAD drawings can be downloaded from the website. www.intelligentactuator.com

For Special Orders Appendix P.15

2D CAD

*The SRA7BD is not available in non-motor end configuration, due to its construction.

(*1) Connect the motor and encoder cables here. See page A-59 for details on cables.
(*2) After homing, the slider moves to the ME, therefore, please watch for any interference with surrounding objects.
ST: Stroke
SE : Stroke end
ME : Mechanical end
(*3) The orientation of the bolt varies depending on the product.

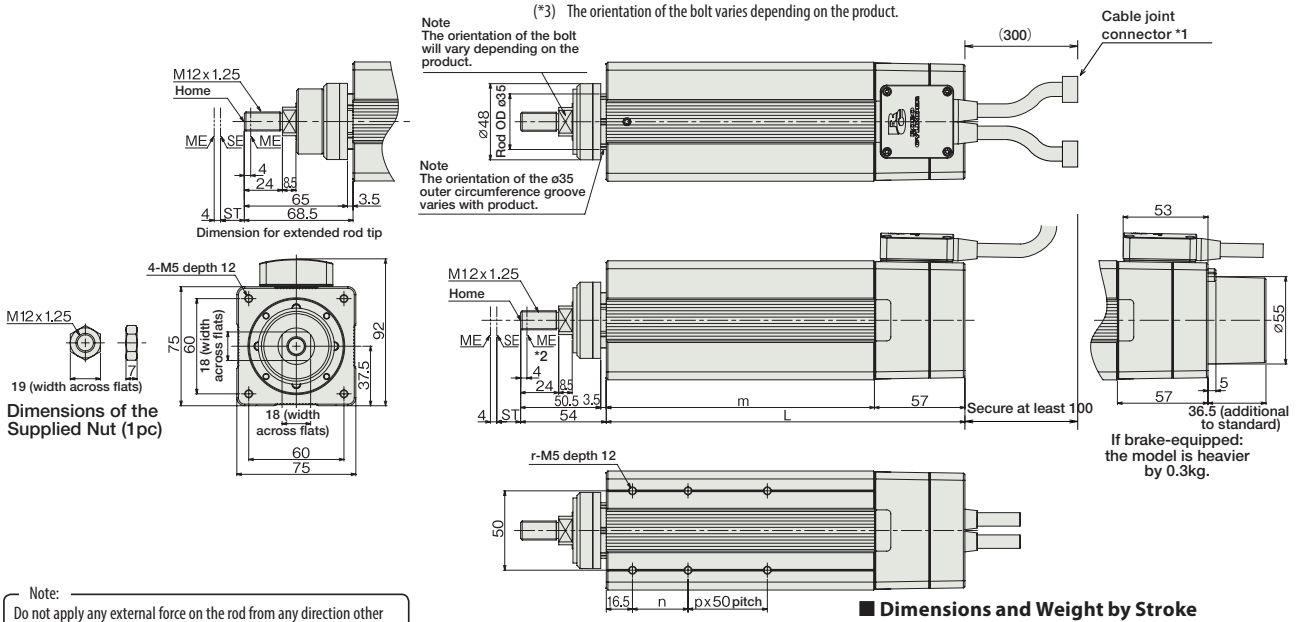


Note:
Do not apply any external force on the rod from any direction other than the direction of the rod's motion. If a force is exerted on the rod in a perpendicular or rotational direction,the detent may become damaged.

Note:
A slit is provided in the side of the actuator body to prevent pauses due to forward/backward operation.
Please be careful when operating in the dusty environment. The dust may enter inside from the slit.

### Dimensions and Weight by Stroke

| Stroke | | 50 | 100 | 150 | 200 | 250 | 300 |
|---|---|---|---|---|---|---|---|
| L | 60W | 126 | 176 | 226 | 276 | 326 | 376 |
| | 100W | 133 | 176 | 226 | 276 | 326 | 376 |
| | 150W | 145 | 176 | 226 | 276 | 326 | 376 |
| m | 60W | 69 | 119 | 169 | 219 | 269 | 319 |
| | 100W | 76 | 119 | 169 | 219 | 269 | 319 |
| | 150W | 88 | 119 | 169 | 219 | 269 | 319 |
| n | | 25 | 35 | 35 | 35 | 35 | 35 |
| p | | 0 | 0 | 1 | 2 | 3 | 4 |
| r | | 4 | 4 | 6 | 8 | 10 | 12 |
| Weight (kg) | 60W | 2.4 | 2.9 | 3.5 | 4.1 | 4.6 | 5.2 |
| | 100W | 2.6 | 3.1 | 3.7 | 4.2 | 4.8 | 5.4 |
| | 150W | 2.9 | 3.3 | 3.9 | 4.4 | 5 | 5.6 |

## ②Applicable Controllers

RCS2 series actuators can be operated with the controllers indicated below. Select the type according to your intended application.

| Name | External view | Model number | Features | Maximum number of positioning points | Input power | Power-supply capacity | Standard price | Reference page |
|---|---|---|---|---|---|---|---|---|
| Positioner mode | | SCON-CA-①I-NP-2-② | Up to 512 positioning points are supported. | 512 points | Single-phase 100VAC<br>Single-phase 200VAC<br>3-phase 200VAC (XSEL-P/Q only) | 408 VA max.<br>* Varies depending on the controller. Refer to the operation manual for details. | — | → P643 |
| Solenoid valve mode | | | Actuators can be operated through the same control used for solenoid valves. | 7 points | | | | |
| Field network type | | | Movement by numerical specification is supported. | 768 points | | | | |
| Pulse-train input control type | | | Dedicated pulse-train input type | (—) | | | — | |
| Program control type 1 or 2 axes | | SSEL-CS-1-①I-NP-2-② | Program operation is supported<br>Up to two axes can be operated | 20,000 points | | | — | → P685 |
| Program control type 1 or 6 axes | | XSEL-③-1-①I-N1-EEE-2-④ | Program operation is supported<br>Up to six axes can be operated | 20,000 points | | | — | → P695 |

* This is for the single-axis SSEL, and XSEL.
* ② Indicates the power-supply voltage type (1: 100 V / 2: Single-phase 200 V).
* ④ Indicates the power-supply voltage type (1: 100 V / 2: Single-phase 200 V / 3: Three-phase 200 V).
* ① Indicates the wattage (60/100/150).
* ③ Indicates the XSEL type (J / K / P / Q ).

Please note that this model cannot be connected to the XSEL-P/Q type (5-axis/6-axis), XSEL-R/S type, or MSCON.

Slider Type
Mini
Standard
Controllers Integrated
Rod Type
Mini
Standard
Controllers Integrated
Table/ Arm/ Flat Type
Mini
Standard
Gripper/ Rotary Type
Linear Servo Type
Clean-room Type
Splash-Proof Type
Pulse Motor
Servo Motor (24V)
Servo Motor (200V)
Linear Servo Motor

# RCS2-RA4R

Robo Cylinder, Rod Type, ø37mm Diameter, 200V Servo Motor, Side-mounted Motor

Model Specification Items: RCS2 — RA4R — ☐ — ☐ — ☐ — ☐ — ☐ — ☐ — ☐

| Series | Type | Encoder type | Motor type | Lead | Stroke | Applicable controller | Cable length | Options |
|---|---|---|---|---|---|---|---|---|
| RCS2 | RA4R | I : Incremental<br>A: Absoulute | 20 : 20W Servo motor<br>30 : 30W Servo motor | 12 :12mm<br>6 : 6mm<br>3 : 3mm | 50: 50mm<br>~<br>300: 300mm<br>(50mm pitch increments) | T1: XSEL-J/K<br>T2: SCON<br>MSCON<br>SSEL<br>XSEL-P/Q<br>XSEL-R/S | N: None<br>P: 1m<br>S: 3m<br>M: 5m<br>X□□: Custom Length<br>R□□: Robot Cable | See options below. |

* See page Pre-47 for details on the model descriptions.

CE RoHS

*CE compliance is optional.

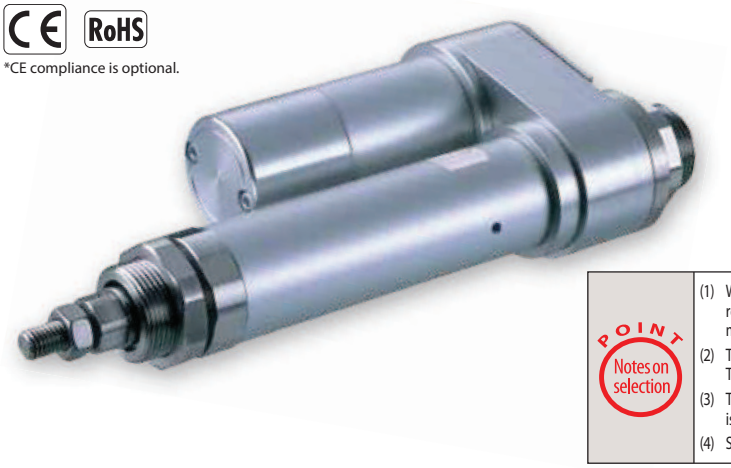

Technical References Appendix P.5

POINT Notes on selection

(1) When the stroke increases, the maximum speed will drop to prevent the ball screw from reaching the critical rotational speed. Use the actuator specification table below to check the maximum speed at the stroke you desire.
(2) The load capacity is based on operation at an acceleration of 0.3G (0.2G for 3mm-lead model), This is the upper limit of the acceleration.
(3) The values for the horizontal load capacity assume the use of an external guide, so that there is no external force from any direction other than the forward/backward direction of the rod.
(4) See page A-71 for details on push motion.

## Actuator Specifications

### Leads and Payloads

| Model number | Motor output (W) | Lead (mm) | Max. Load Capacity Horizontal (kg) | Max. Load Capacity Vertical (kg) | Rated thrust (N) | Stroke (mm) |
|---|---|---|---|---|---|---|
| RCS2-RA4R-①-20-12-②-③-④-⑤ | 20 | 12 | 3.0 | 1.0 | 18.9 | 50~300 (every 50mm) |
| RCS2-RA4R-①-20-6-②-③-④-⑤ | | 6 | 6.0 | 2.0 | 37.7 | |
| RCS2-RA4R-①-20-3-②-③-④-⑤ | | 3 | 12.0 | 4.0 | 75.4 | |
| RCS2-RA4R-①-30-12-②-③-④-⑤ | 30 | 12 | 4.0 | 1.5 | 28.3 | |
| RCS2-RA4R-①-30-6-②-③-④-⑤ | | 6 | 9.0 | 3.0 | 56.6 | |
| RCS2-RA4R-①-30-3-②-③-④-⑤ | | 3 | 18.0 | 6.5 | 113.1 | |

### Stroke and Maximum Speed

| Lead \ Stroke | 50~300 (every 50mm) |
|---|---|
| 12 | 600 |
| 6 | 300 |
| 3 | 150 |

(Unit: mm/s)

Code explanation ① Encoder ② Stroke ③ Applicable controller ④ Cable length ⑤ Options *See page A-71 for details on push motion.

## ①Encoder Type/②Stroke

| ②Stroke (mm) | Standard price ①Encoder Type Incremental Motor Output (W) 20W | Incremental 30W | Absolute Motor Output (W) 20W | Absolute 30W |
|---|---|---|---|---|
| 50 | — | — | — | — |
| 100 | — | — | — | — |
| 150 | — | — | — | — |
| 200 | — | — | — | — |
| 250 | — | — | — | — |
| 300 | — | — | — | — |

## ⑤Options

| Name | Option code | See page | Standard price |
|---|---|---|---|
| Brake | B | → A-42 | — |
| CE compliance | CE | → A-42 | — |
| Foot bracket | FT | → A-49 | — |
| Flange bracket (front) | FL | → A-45 | — |
| Flange bracket (back) | FLR | → A-46 | — |
| Home sensor | HS | → A-50 | — |
| Knuckle joint | NJ | → A-53 | — |
| Non-motor end specification | NM | → A-52 | — |
| Clevis bracket | QR | → A-53 | — |
| Back-mounting plate | RP | → A-54 | — |
| Trunnion bracket (front) | TRF | → A-57 | — |

*The home sensor (HS) cannot be used on the non-motor end models.

## ④Cable Length

| Type | Cable symbol | Standard Price |
|---|---|---|
| Standard | **P** (1m) | — |
| | **S** (3m) | — |
| | **M** (5m) | — |
| Special length | **X06** (6m) ~ **X10** (10m) | — |
| | **X11** (11m) ~ **X15** (15m) | — |
| | **X16** (16m) ~ **X20** (20m) | — |
| Robot Cable | **R01** (1m) ~ **R03** (3m) | — |
| | **R04** (4m) ~ **R05** (5m) | — |
| | **R06** (6m) ~ **R10** (10m) | — |
| | **R11** (11m) ~ **R15** (15m) | — |
| | **R16** (16m) ~ **R20** (20m) | — |

* See page A-59 for cables for maintenance.

## Actuator Specifications

| Item | Description |
|---|---|
| Drive System | Ball screw, ø10mm, rolled C10 |
| Positioning Repeatability | ±0.02mm |
| Lost Motion | 0.1mm or less |
| Base | Material: Aluminum, white alumite treated |
| Rod diameter | ø20mm |
| Non-rotating accuracy of rod | ±1.0 deg |
| Ambient operating temperature, humidity | 0 to 40°C, 85% RH or less (Non-condensing) |

## Dimensional Drawings

CAD drawings can be downloaded from the website. www.intelligentactuator.com

For Special Orders Appendix P.15

2D CAD 3D CAD

### [No Brake]

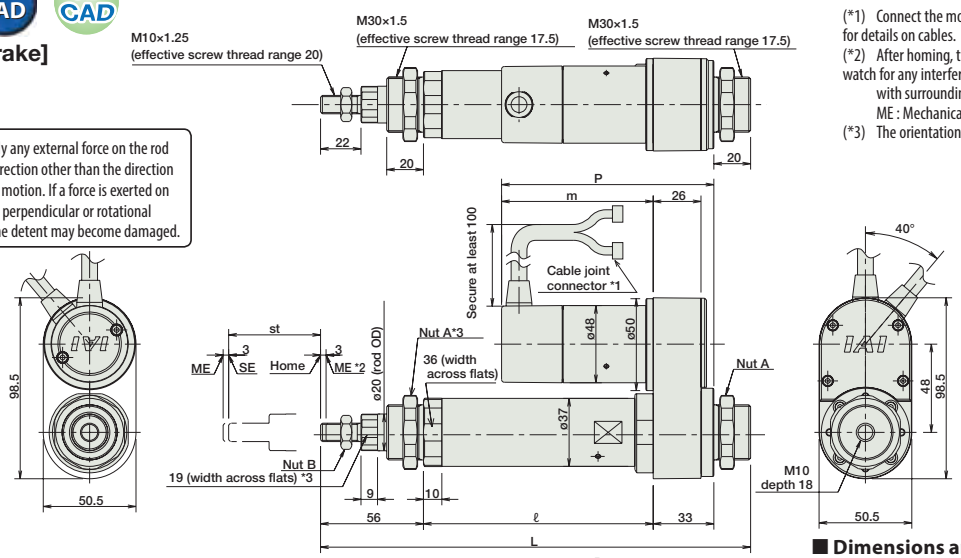


(*1) Connect the motor and encoder cables here. See page A-59 for details on cables.
(*2) After homing, the slider moves to the ME, therefore, please watch for any interference with surrounding objects.
ME : Mechanical end SE : Stroke end
(*3) The orientation of the bolt varies depending on the product.

Note:
Do not apply any external force on the rod from any direction other than the direction of the rod's motion. If a force is exerted on the rod in a perpendicular or rotational direction,the detent may become damaged.

### [Brake-Equipped]

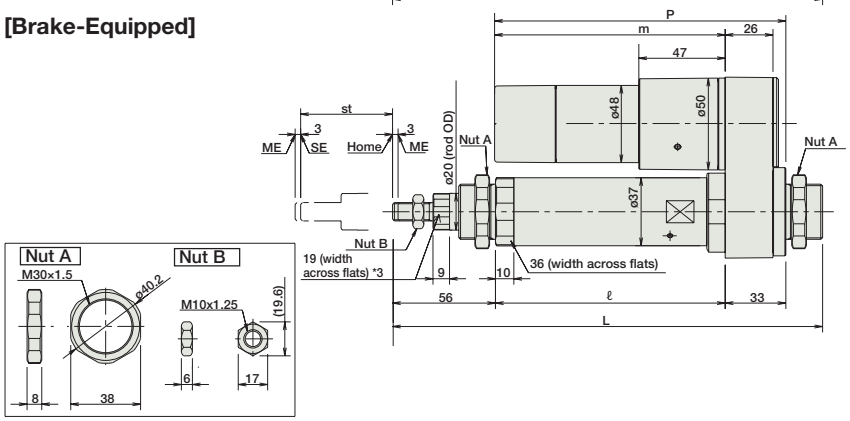


### ■ Dimensions and Weight by Stroke

**RCS2-RA4R (without brake)**

| Stroke | | 50 | 100 | 150 | 200 | 250 | 300 |
|---|---|---|---|---|---|---|---|
| L | 20W | 234 | 284 | 334 | 384 | 434 | 484 |
| | 30W | 234 | 284 | 334 | 384 | 434 | 484 |
| ℓ | | 125 | 175 | 225 | 275 | 325 | 375 |
| m | 20W | 80.5 | | | | | |
| | 30W | 95.5 | | | | | |
| P | 20W | 113.5 | | | | | |
| | 30W | 128.5 | | | | | |
| Weight (kg) | | 1.2 | 1.4 | 1.5 | 1.7 | 1.8 | 2.0 |

**RCS2-RA4R (with brake)**

| Stroke | | 50 | 100 | 150 | 200 | 250 | 300 |
|---|---|---|---|---|---|---|---|
| L | 20W | 234 | 284 | 334 | 384 | 434 | 484 |
| | 30W | 234 | 284 | 334 | 384 | 434 | 484 |
| ℓ | | 125 | 175 | 225 | 275 | 325 | 375 |
| m | 20W | 123.5 | | | | | |
| | 30W | 138.5 | | | | | |
| P | 20W | 156.5 | | | | | |
| | 30W | 171.5 | | | | | |
| Weight (kg) | | 1.4 | 1.6 | 1.7 | 1.9 | 2.0 | 2.2 |

## ③ Applicable Controllers

RCS2-series actuators can be operated with the following controllers. Select an appropriate controller type according to your application.

| Name | External view | Model number | Features | Maximum number of positioning points | Input power | Power supply capacity | Standard price | Reference page |
|---|---|---|---|---|---|---|---|---|
| Positioner mode | | SCON-CA-20Ⓘ-NP-2-Ⓘⅰ<br>SCON-CA-30DⒾ-NP-2-Ⓘⅰ | Up to 512 positioning points are supported. | 512 points | Single-phase 100VAC<br>Single-phase 200VAC<br>3-phase 200VAC (XSEL-P/Q/R/S ONLY) | 126 VA max.<br>*Power supply capacity will vary depending on the controller, so please refer to the instruction manual for details. | — | → P643 |
| Solenoid valve mode | | | Actuators can be operated through the same control used for solenoid valves. | 7 points | | | | |
| Field network type | | | Movement by numerical specification is supported. | 768 points | | | — | |
| Pulse-train input control type | | | Dedicated pulse-train input type | (—) | | | — | |
| Positioner multi-axis, network type | | MSCON-C-1-20Ⓘ-Ⓥ-0-Ⓘⅰ<br>MSCON-C-1-30DⒾ-Ⓥ-0-Ⓘⅰ | Up to 6 axes can be operated. Movement by numerical specification is supported. | 256 points | | | — | → P655 |
| Program control type, 1 to 2 axes | | SSEL-CS-1-20Ⓘ-NP-2-Ⓘⅰ<br>SSEL-CS-1-30DⒾ-NP-2-Ⓘⅰ | Program operation is supported. Up to 2 axes can be operated. | 20,000 points | | | — | → P685 |
| Program control type, 1 to 8 axes | | XSEL-Ⓘⅲ-1-20Ⓘ-N1-EEE-2-Ⓥ<br>XSEL-Ⓘⅲ-1-30DⒾ-N1-EEE-2-Ⓥ | Program operation is supported. Up to 8 axes can be operated. | Varies depending on the number of axes connected | | | — | → P695 |

* This is for the single-axis MSCON, SSEL, and XSEL.
* Ⓘⅰ indicates the power-supply voltage type (1: 100V / 2: Single-phase 200V).
* Ⓥ indicates the power-supply voltage type (1: 100 V / 2: Single-phase 200V / 3: Three-phase 200V).
* Ⓘ indicates the encoder type (I: Incremental / A: Absolute).
* Ⓘⅲ indicates the XSEL type (J / K / P / Q / R / S).
* Ⓥ indicates field network specification symbol.

Slider Type
Mini
Standard
Controllers Integrated
Rod Type
Mini
Standard
Controllers Integrated
Table/ Arm/ Flat Type
Mini
Standard
Gripper/ Rotary Type
Linear Servo Type
Clean-room Type
Splash-Proof Type
Pulse Motor
Servo Motor (24V)
Servo Motor (200V)
Linear Servo Motor

# RCS2-RA5R

Robo Cylinder, Rod Type, Actuator Width 55mm, 200V Servo Motor, Side-mounted Motor

**Model Specification Items**

| RCS2 | RA5R | ☐ | 60 | ☐ | ☐ | ☐ | ☐ | ☐ |
|---|---|---|---|---|---|---|---|---|
| Series | Type | Encoder type | Motor type | Lead | Stroke | Applicable controller | Cable length | Options |
| | | I : Incremental<br>A: Absoulute | 60 : 60W Servo motor | 16 :16mm<br>8 : 8mm<br>4 : 4mm | 50: 50mm<br>~<br>300: 300mm<br>(50mm pitch increments) | T1: XSEL-J/K<br>T2: SCON<br>MSCON<br>SSEL<br>XSEL-P/Q<br>XSEL-R/S | N: None<br>P: 1m<br>S: 3m<br>M:5m<br>X☐☐: Custom Length<br>R☐☐: Robot Cable | See options below.<br>* Be sure to specify which side the motor is to be mounted (ML/MR). |

* See page Pre-47 for details on the model descriptions.

CE RoHS
*CE compliance is optional.

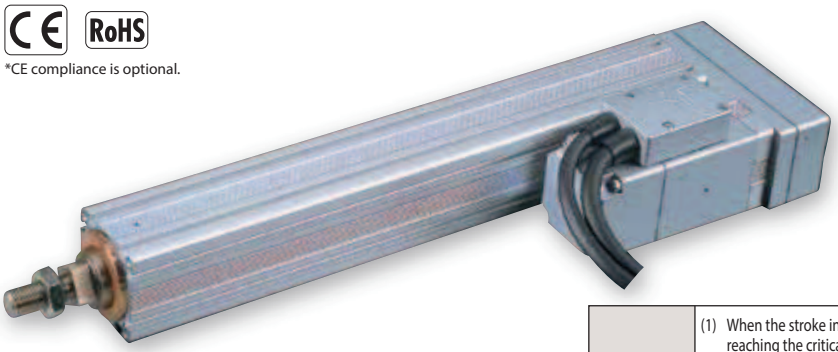

Technical References Appendix P.5

**POINT Notes on selection**

(1) When the stroke increases, the maximum speed will drop to prevent the ball screw from reaching the critical rotational speed. Use the actuator specification table below to check the maximum speed at the stroke you desire.
(2) The load capacity is based on operation at an acceleration of 0.3G (0.2G for 4mm-lead model), This is the upper limit of the acceleration.
(3) The values for the horizontal load capacity assume the use of an external guide, so that there is no external force from any direction other than the forward/backward direction of the rod.
(4) See page A-71 for details on push motion.

## Actuator Specifications

### Leads and Payloads

| Model number | Motor output (W) | Lead (mm) | Max. Load Capacity Horizontal (kg) | Max. Load Capacity Vertical (kg) | Rated thrust (N) | Stroke (mm) |
|---|---|---|---|---|---|---|
| RCS2-RA5R-①-60-16-②-③-④-⑤ | 60 | 16 | 12.0 | 2.0 | 63.8 | 50~300 (every 50mm) |
| RCS2-RA5R-①-60-8-②-③-④-⑤ | | 8 | 25.0 | 5.0 | 127.5 | |
| RCS2-RA5R-①-60-4-②-③-④-⑤ | | 4 | 50.0 | 11.5 | 255.1 | |

### Stroke and Maximum Speed

| Lead \ Stroke | 50~250 (every 50mm) | 300 (mm) |
|---|---|---|
| 16 | 800 | 755 |
| 8 | 400 | 377 |
| 4 | 200 | 188 |

(Unit: mm/s)

Code explanation ① Encoder ② Stroke ③ Applicable controller ④ Cable length ⑤ Options *See page A-71 for details on push motion.

## ①Encoder Type/②Stroke

| ②Stroke (mm) | Standard price ①Encoder Type Incremental I | Standard price ①Encoder Type Absolute A |
|---|---|---|
| 50 | — | — |
| 100 | — | — |
| 150 | — | — |
| 200 | — | — |
| 250 | — | — |
| 300 | — | — |

## ④Cable Length

| Type | Cable symbol | Standard Price |
|---|---|---|
| Standard | **P** (1m) | — |
| | **S** (3m) | — |
| | **M** (5m) | — |
| Special length | **X06** (6m) ~ **X10** (10m) | — |
| | **X11** (11m) ~ **X15** (15m) | — |
| | **X16** (16m) ~ **X20** (20m) | — |
| Robot Cable | **R01** (1m) ~ **R03** (3m) | — |
| | **R04** (4m) ~ **R05** (5m) | — |
| | **R06** (6m) ~ **R10** (10m) | — |
| | **R11** (11m) ~ **R15** (15m) | — |
| | **R16** (16m) ~ **R20** (20m) | — |

* See page A-59 for cables for maintenance.

## ⑤Options

| Name | Option code | See page | Standard price |
|---|---|---|---|
| Connector cable exit direction | **A2** | → A-41 | — |
| Brake | **B** | → A-42 | — |
| CE compliance | **CE** | → A-42 | — |
| Flange | **FL** | → A-45 | — |
| Foot bracket | **FT** | → A-49 | — |
| Left-mounted motor (standard) | **ML** | → A-52 | — |
| Right-mounted motor | **MR** | → A-52 | — |

## Actuator Specifications

| Item | Description |
|---|---|
| Drive System | Ball screw, ø12mm, rolled C10 |
| Positioning Repeatability | ±0.02mm |
| Lost Motion | 0.1mm or less |
| Base | Material: Aluminum, white alumite treated |
| Rod diameter | ø30mm |
| Non-rotating accuracy of rod | ±0.7 deg |
| Ambient operating temperature, humidity | 0 to 40°C, 85% RH or less (Non-condensing) |

## Dimensional Drawings

CAD drawings can be downloaded from the website. www.intelligentactuator.com

For Special Orders Appendix P.15

2D CAD

### [No Brake]

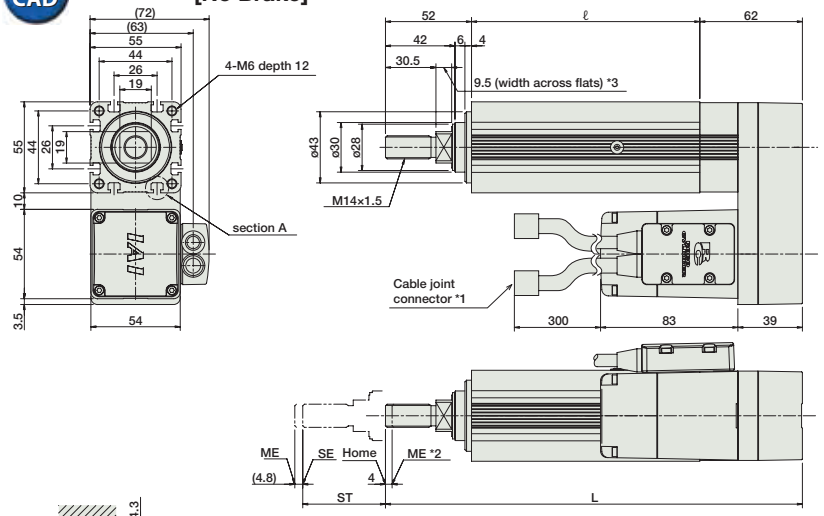


*The RA5R is not available in non-motor end configuration, due to its construction.

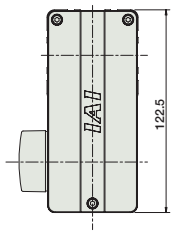


(*1) Connect the motor and encoder cables here. See page A-59 for details on cables.
(*2) After homing, the slider moves to the ME, therefore, please watch for any interference with surrounding objects.
ME : Mechanical end SE : Stroke end
(*3) The orientation of the bolt varies depending on the product.

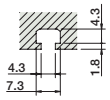


Details of section A

### [Brake-Equipped]

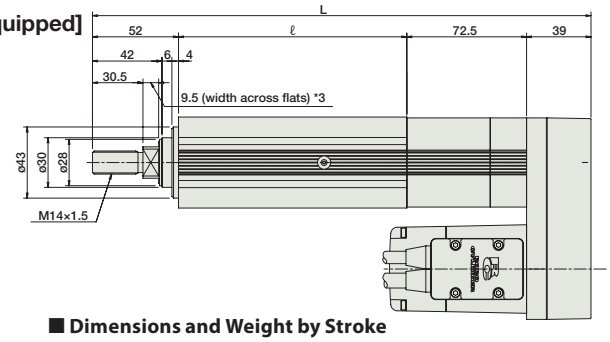


Note:
Do not apply any external force on the rod from any direction other than the direction of the rod's motion. If a force is exerted on the rod in a perpendicular or rotational direction,the detent may become damaged.

Dimensions of the Supplied Nut

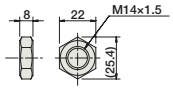


### ■ Dimensions and Weight by Stroke

**RCS2-RA5R (without brake)**

| Stroke | 50 | 100 | 150 | 200 | 250 | 300 |
|---|---|---|---|---|---|---|
| L | 252 | 302 | 352 | 402 | 452 | 502 |
| ℓ | 138 | 188 | 238 | 288 | 338 | 388 |
| Weight (kg) | 2.3 | 2.6 | 2.9 | 3.2 | 3.5 | 3.8 |

**RCS2-RA5R (with brake)**

| Stroke | 50 | 100 | 150 | 200 | 250 | 300 |
|---|---|---|---|---|---|---|
| L | 301.5 | 351.5 | 401.5 | 451.5 | 501.5 | 551.5 |
| ℓ | 138 | 188 | 238 | 288 | 338 | 388 |
| Weight (kg) | 2.6 | 2.9 | 3.2 | 3.5 | 3.8 | 4.1 |

## ③ Applicable Controllers

RCS2-series actuators can be operated with the following controllers. Select an appropriate controller type according to your application.

| Name | External view | Model number | Features | Maximum number of positioning points | Input power | Power supply capacity | Standard price | Reference page |
|---|---|---|---|---|---|---|---|---|
| Positioner mode | | SCON-CA-60Ⓘ-NP-2-Ⓘⅲ | Up to 512 positioning points are supported. | 512 points | Single-phase 100VAC<br>Single-phase 200VAC<br>3-phase 200VAC (XSEL-P/Q/R/S ONLY) | 218 VA max.<br>*Power supply capacity will vary depending on the controller, so please refer to the instruction manual for details. | — | → P643 |
| Solenoid valve mode | | | Actuators can be operated through the same control used for solenoid valves. | 7 points | | | | |
| Field network type | | | Movement by numerical specification is supported. | 768 points | | | — | |
| Pulse-train input control type | | | Dedicated pulse-train input type | (—) | | | — | |
| Positioner multi-axis, network type | | MSCON-C-1-60Ⓘ-Ⓥ-0-Ⓘⅲ | Up to 6 axes can be operated. Movement by numerical specification is supported. | 256 points | | | — | → P655 |
| Program control type, 1 to 2 axes | | SSEL-CS-1-60Ⓘ-NP-2-Ⓘⅲ | Program operation is supported. Up to 2 axes can be operated. | 20,000 points | | | — | → P685 |
| Program control type, 1 to 8 axes | | XSEL-Ⓥ-1-60Ⓘ-N1-EEE-2-Ⓥ | Program operation is supported. Up to 8 axes can be operated. | Varies depending on the number of axes connected | | | — | → P695 |

* This is for the single-axis MSCON, SSEL, and XSEL.
* Ⓘ indicates the encoder type (I: Incremental / A: Absolute).
* Ⓘⅱ indicates the power-supply voltage type (1: 100V / 2: Single-phase 200V).
* Ⓘⅲ indicates the XSEL type (J / K / P / Q / R / S).
* Ⓥ indicates the power-supply voltage type (1: 100 V / 2: Single-phase 200V / 3: Three-phase 200V).
* Ⓥ indicates field network specification symbol.

Slider Type
Mini
Standard
Controllers Integrated
Rod Type
Mini
Standard
Controllers Integrated
Table/ Arm/ Flat Type
Mini
Standard
Gripper/ Rotary Type
Linear Servo Type
Clean-room Type
Splash-Proof Type
Pulse Motor
Servo Motor (24V)
Servo Motor (200V)
Linear Servo Motor

# RCS2-RA13R

Robo Cylinder, Ultra High Thrust Rod Type, Actuator Width 130mm, 200V Servo Motor, Side-mounted Motor

**Model Specification Items**

| RCS2 | RA13R | □ | 750 | □ | □ | T2 | □ | □ |
|---|---|---|---|---|---|---|---|---|
| Series | Type | Encoder type | Motor type | Lead | Stroke | Applicable controller | Cable length | Options |
| | | I : Incremental<br>A: Absoulute | 750 : 750W Servo motor | 2.5: 2.5mm<br>1.25:1.25mm | 50: 50mm<br>~<br>200: 200mm<br>(50mm pitch increments) | T2: SCON<br>SSEL<br>XSEL-P/Q<br>XSEL-R/S | N: None<br>P: 1m<br>S: 3m<br>M:5m<br>X□□: Custom Length<br>R□□: Robot Cable | See options below.<br>* Please be sure to specify one of the codes for the motor mounting direction and the cable exit direction. |

* See page Pre-47 for details on the model descriptions.

CE RoHS

*CE compliance is optional.

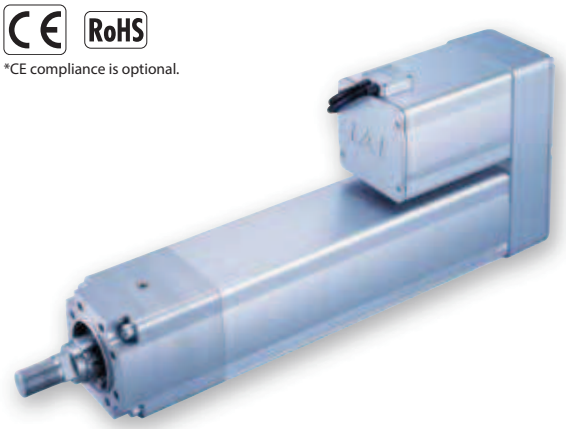

## Pushing Force vs. Current Limit

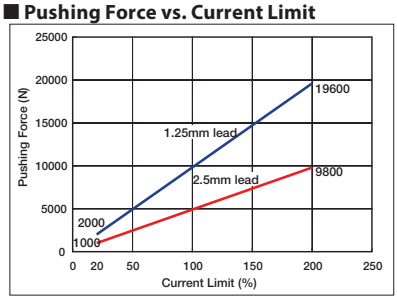


Note:
- The correlation between the pushing force and the current limit are only rough guide values, and may deviate from the actual numbers.
- The pushing force may be inconsistent if the current limit is low. Therefore, please set it at 20% or higher.
- The travel speed while the pushing force is acting is fixed at 10mm/s. The graph shows pushing action at 10mm/s. Please note that the pushing force will decrease if the speed changes.
- Depending on operational conditions, the pushing force may decrease due to the rise in the temperature of the motor.

*Continuous pushing is allowed if the current limit value during push motion is equal to 70% or less, but there is a pushing time limit when 71% or more. See page A-83 for the details.

**POINT — Notes on selection**

(1) When performing pushing operation, duration of continuous use is preset for the set pushing force. In addition, the continuous thrust (with load and duty factored in) must be less than the rated thrust. For details, please see selection reference material (→page A-83).
(2) The load capacity is based on operation at an acceleration of 0.02G for 2.5mm-lead, and 0.01G for 1.25mm-lead. This is the upper limit of the acceleration.
(3) The values for the horizontal load capacity assume the use of an external guide, so that there is no external force from any direction other than the forward/backward direction of the rod.
(4) The brake option requires, in addition to the actuator and the controller, a brake box (see accessories on page 282).

Technical References — Appendix P.5

## Actuator Specifications

### Leads and Payloads

| Model number | Motor output (W) | Lead (mm) | Max Acceleration (G) | Max. Load Capacity Horizontal (kg) | Max. Load Capacity Vertical (kg) | Rated thrust (N) | Continuous Pushing Force (N) | Maximum Push Force (N) | Stroke (mm) |
|---|---|---|---|---|---|---|---|---|---|
| RCS2-RA13R-①-750-2.5-②-T2③-④ | 750 | 2.5 | 0.02 | 400 | 200 | 5106 | 3567 | 9800 | 50~200 (every 50mm) |
| RCS2-RA13R-①-750-1.25-②-T2③-④ | | 1.25 | 0.01 | 500 | 300 | 10211 | 7141 | 19600 | |

Code explanation ① Encoder ② Stroke ③ Cable Length ④ Options

* The values for the horizontal load capacity reflect the use of an external guide.
* See page A-71 for details on push motion.

### Stroke and Maximum Speed

| Lead \ Stroke | 50 | 100 | 150 | 200 |
|---|---|---|---|---|
| 2.5 | 85 | 120 | 125 | |
| 1.25 | 62 | | | |

(Unit: mm/s)

## ①Encoder Type/②Stroke

| ②Stroke (mm) | Standard price ①Encoder Type Incremental 1t type (2.5mm lead) | Incremental 2t type (1.25mm lead) | Absolute 1t type (2.5mm lead) | Absolute 2t type (1.25mm lead) |
|---|---|---|---|---|
| 50 | — | — | — | — |
| 100 | — | — | — | — |
| 150 | — | — | — | — |
| 200 | — | — | — | — |

## ③Cable Length

| Type | Cable symbol | Standard Price |
|---|---|---|
| Standard | **P** (1m) | — |
| | **S** (3m) | — |
| | **M** (5m) | — |
| Special length | **X06** (6m) ~ **X10** (10m) | — |
| | **X11** (11m) ~ **X15** (15m) | — |
| | **X16** (16m) ~ **X20** (20m) | — |
| Robot Cable | **R01** (1m) ~ **R03** (3m) | — |
| | **R04** (4m) ~ **R05** (5m) | — |
| | **R06** (6m) ~ **R10** (10m) | — |
| | **R11** (11m) ~ **R15** (15m) | — |
| | **R16** (16m) ~ **R20** (20m) | — |

* See page A-59 for cables for maintenance.

## ④Options

| Name | Option code | See page | Standard price |
|---|---|---|---|
| Brake (with brake box) | **B** | → A-42 | — |
| Brake (without brake box) | **BN** | → A-42 | — |
| CE compliance | **CE** | → A-42 | — |
| Top-mounted motor | **MT1/MT2/MT3** | → P282 | — |
| Right-mounted motor | **MR1/MR2** | → P282 | — |
| Left-mounted motor | **ML1/ML3** | → P282 | — |
| Flange | **FL** | → A-46 | — |
| Foot bracket | **FT** | → A-49 | — |
| Load cell type (with cable track) | **LCT** | → A-51 | — |
| Load cell type (without cable track) | **LCN** | → A-51 | — |

(Note: )
The load cell type option can be operable only when the SCON-CA controller is used.
The load cell type (with cable track) option and a flange option cannot be selected simultaneously.

## Actuator Specifications

| Item | Description |
|---|---|
| Drive System | Ball screw, ø32mm, rolled C10 |
| Positioning Repeatability | ±0.01mm |
| Backlash | 0.2mm or less |
| Rod diameter | ø50mm (ball spline) |
| Allowable load moment of the rod | 120 N·m |
| Ambient operating temperature, humidity | 0 to 40°C, 85% RH or less (Non-condensing) |
| Push force service life | 10 million pushes (*1) |

(*1) The number of pushes arwe based on the maximum pushing force and a distance of 1mm.

## Dimensional Drawings

CAD drawings can be downloaded from the website. www.intelligentactuator.com

2D CAD

For Special Orders Appendix P.15

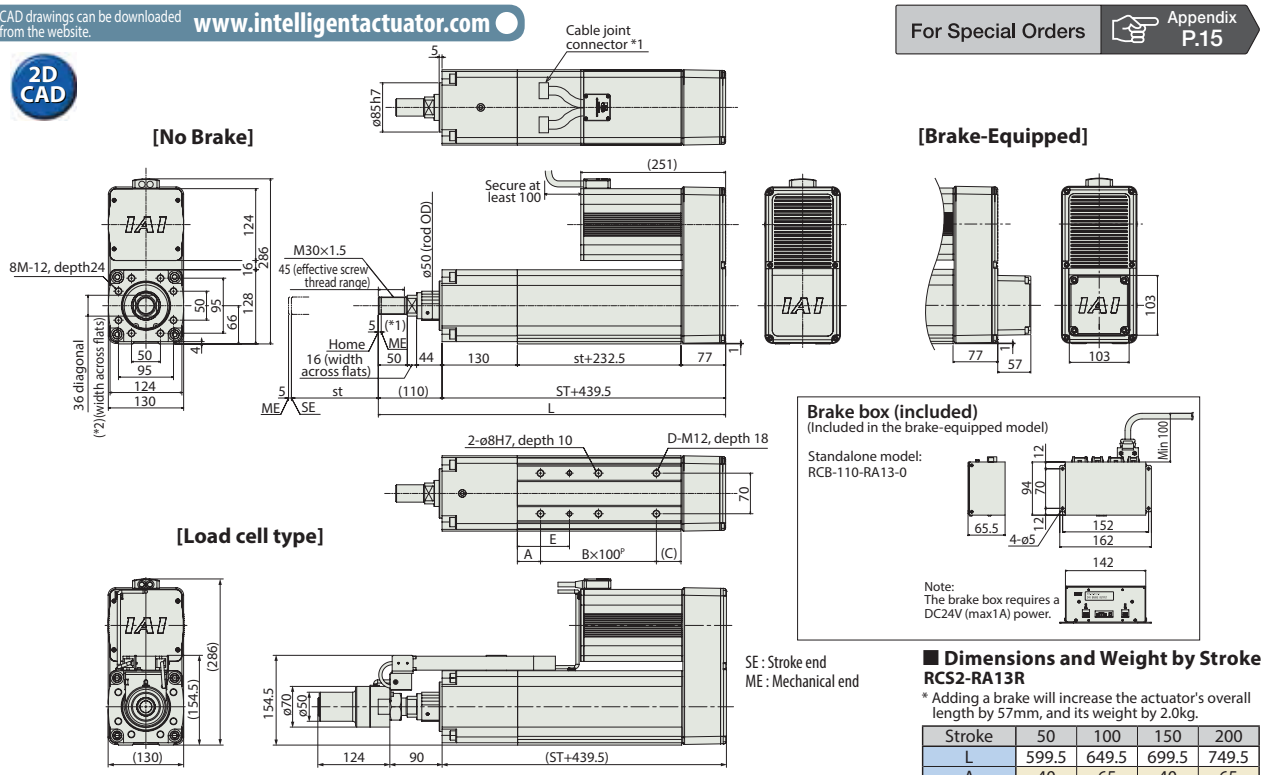


(*1) Connect the motor and encoder cables here. See page A-59 for details on cables.
(*2) During home return, be careful to avoid interference from peripheral objects because the slider travels until the mechanical end.
(*3) The orientation of the bolt varies depending on the product.

Note:
The brake-equipped model (option code: "-B") always comes with a brake box.
If you want to order just the brake-equipped actuator, specify the option code "-BN".

### ■ Dimensions and Weight by Stroke

**RCS2-RA13R**

* Adding a brake will increase the actuator's overall length by 57mm, and its weight by 2.0kg.

| Stroke | 50 | 100 | 150 | 200 |
|---|---|---|---|---|
| L | 599.5 | 649.5 | 699.5 | 749.5 |
| A | 40 | 65 | 40 | 65 |
| B | 2 | 2 | 3 | 3 |
| C | 42.5 | 67.5 | 42.5 | 67.5 |
| D | 6 | 6 | 8 | 8 |
| E | 90 | 115 | 90 | 115 |
| Weight (kg) | 33 | 34 | 35 | 36 |

## Motor-mounting direction / Cable exit direction (options)

Note:
Please be sure to specify one of the codes for the motor mounting direction and the cable exit direction.

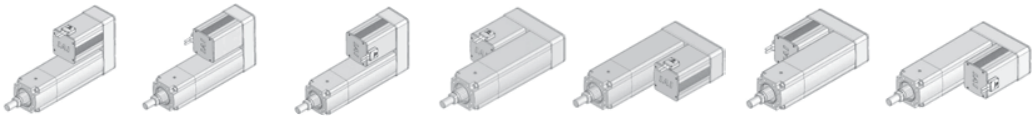

| Option Code | MT1 | MT2 | MT3 | MR1 | ML1 | MR2 | ML3 |
|---|---|---|---|---|---|---|---|
| Motor-mounting direction | Top (standard) | Top | Top | Right | Left | Right | Left |
| Cable exit direction | Top (standard) | Right | Left | Top | Top | Right | Left |

## Applicable Controllers

RCS2 series actuators can be operated with the controllers indicated below. Select the type according to your intended application.

| Name | External view | Model number | Features | Maximum number of positioning points | Input power | Power-supply capacity | Standard price | Reference page |
|---|---|---|---|---|---|---|---|---|
| Positioner mode | | (Standard) SCON-CA-750Ⓘ-NP-2-2<br>(Load cell type) SCON-CA-750SⓘI-NP-2-2 | Up to 512 positioning points are supported. | 512 points | Single-Phase 200VAC (SCON-CA/SSEL only)<br>Three-phase 200VAC (XSEL-P/Q/R/S only) | 1569VA max.<br>* When operating a 750W single-axis model. | — | → P643 |
| Solenoid valve mode | | | Actuators can be operated through the same control used for solenoid valves. | 7 points | | | | |
| Field network type | | | Movement by numerical specification is supported. | 768 points | | | | |
| Pulse-train input control type | | | Dedicated pulse-train input type | (—) | | | — | |
| Program control type 1 or 2 axes | | SSEL-CS-1-750Ⓘ-NP-2 | Program operation is supported Up to two axes can be operated | 20,000 points | | | — | → P685 |
| Program control type 1 or 6 axes | | XSEL-Ⓙ-1-750Ⓘ-N1-EEE-2-Ⓥ | Program operation is supported Up to eight axes can be operated | Varies depending on the number of axes connected | | | — | → P695 |

* This is for the single-axis SSEL, and XSEL.
* Ⓙ Indicates the XSEL type (P / Q / R / S).
* Ⓘ Indicates the encoder type (I: Incremental / A: Absolute).
* Ⓥ Indicates the power-supply voltage type (1: 100 V / 2: Single-phase 200 V / 3: Three-phase 200 V).

(Note:) The load cell type option can be operable only when the SCON-CA controller is used.

Slider Type
Mini
Standard
Controllers Integrated
Rod Type
Mini
Standard
Controllers Integrated
Table/ Arm/ Flat Type
Mini
Standard
Gripper/ Rotary Type
Linear Servo Type
Clean-room Type
Splash-Proof Type
Pulse Motor
Servo Motor (24V)
Servo Motor (200V)
Linear Servo Motor

# RCS2-RGS4C

Robo Cylinder, Rod Type with Single Guide, ø37mm Diameter, 200V Servo Motor, Coupled

**Model Specification Items**

| RCS2 | RGS4C | □ | □ | □ | □ | □ | □ | □ |
|---|---|---|---|---|---|---|---|---|
| Series | Type | Encoder type | Motor type | Lead | Stroke | Applicable controller | Cable length | Options |
| | | I : Incremental<br>A: Absoulute | 20 : 20W Servo motor<br>30 : 30W Servo motor | 12 : 12mm<br>6 : 6mm<br>3 : 3mm | 50: 50mm<br>~<br>300: 300mm<br>(50mm pitch increments) | T1: XSEL-J/K<br>T2: SCON<br>MSCON<br>SSEL<br>XSEL-P/Q<br>XSEL-R/S | N: None<br>P: 1m<br>S: 3m<br>M: 5m<br>X□□: Custom Length<br>R□□: Robot Cable | See options below. |

* See page Pre-47 for details on the model descriptions.

CE RoHS

*CE compliance is optional.

## For High Acceleration/Deceleration (*1)

(*1) Except all 20W models and 30W 3mm lead models

Technical References Appendix P.5

**POINT — Notes on selection**

(1) When the stroke increases, the maximum speed will drop to prevent the ball screw from reaching the critical rotational speed. Use the actuator specification table below to check the maximum speed at the stroke you desire.
(2) The load capacity is based on operating the standard and power-saving models at 0.3G (0.2G for 3mm-lead), and 1G acceleration for the high-acceleration models (3mm-lead model excluded). (The values in the table below are the upper limits, even if the acceleration/deceleration is decreased.)
(3) The values for the horizontal load capacity assume the use of an external guide, so that there is no external force from any direction other than the forward/backward direction of the rod. See the technical resources (page A-111) for the allowable weight using the supplied guide alone.
(4) See page A-71 for details on push motion.

## Actuator Specifications

### Leads and Payloads

| Model number | Motor output (W) | Lead (mm) | Max. Load Capacity Horizontal (kg) | Max. Load Capacity Vertical (kg) | Rated thrust (N) | Stroke (mm) |
|---|---|---|---|---|---|---|
| RCS2-RGS4C-①-20-12-②-③-④-⑤ | 20 | 12 | 3.0 | 0.5 | 18.9 | 50~300 (every 50mm) |
| RCS2-RGS4C-①-20-6-②-③-④-⑤ | | 6 | 6.0 | 1.5 | 37.7 | |
| RCS2-RGS4C-①-20-3-②-③-④-⑤ | | 3 | 12.0 | 3.5 | 75.4 | |
| RCS2-RGS4C-①-30-12-②-③-④-⑤ | 30 | 12 | 4.0 | 1.0 | 28.3 | |
| RCS2-RGS4C-①-30-6-②-③-④-⑤ | | 6 | 9.0 | 2.5 | 56.6 | |
| RCS2-RGS4C-①-30-3-②-③-④-⑤ | | 3 | 18.0 | 6.0 | 113.1 | |

### Stroke and Maximum Speed

| Lead \ Stroke | 50~300 (every 50mm) |
|---|---|
| 12 | 600 |
| 6 | 300 |
| 3 | 150 |

(Unit: mm/s)

Code explanation ① Encoder ② Stroke ③ Applicable controller ④ Cable length ⑤ Options *See page A-71 for details on push motion.

## ①Encoder Type/②Stroke

| ②Stroke (mm) | Standard price ①Encoder Type Incremental Motor Output (W) 20W | Incremental 30W | Absolute Motor Output (W) 20W | Absolute 30W |
|---|---|---|---|---|
| 50 | — | — | — | — |
| 100 | — | — | — | — |
| 150 | — | — | — | — |
| 200 | — | — | — | — |
| 250 | — | — | — | — |
| 300 | — | — | — | — |

## ④Cable Length

| Type | Cable symbol | Standard Price |
|---|---|---|
| Standard | **P** (1m) | — |
| | **S** (3m) | — |
| | **M** (5m) | — |
| Special length | **X06** (6m) ~ **X10** (10m) | — |
| | **X11** (11m) ~ **X15** (15m) | — |
| | **X16** (16m) ~ **X20** (20m) | — |
| Robot Cable | **R01** (1m) ~ **R03** (3m) | — |
| | **R04** (4m) ~ **R05** (5m) | — |
| | **R06** (6m) ~ **R10** (10m) | — |
| | **R11** (11m) ~ **R15** (15m) | — |
| | **R16** (16m) ~ **R20** (20m) | — |

* See page A-59 for cables for maintenance.

## ⑤Options

| Name | Option code | See page | Standard price |
|---|---|---|---|
| Brake | **B** | → A-42 | — |
| CE compliance | **CE** | → A-42 | — |
| Foot bracket | **FT** | → A-49 | — |
| High-acceleration/deceleration (*1) | **HA** | → A-50 | — |
| Home sensor (*2) | **HS** | → A-50 | — |
| Non-motor end specification | **NM** | → A-52 | — |
| Trunnion bracket (back) | **TRR** | → A-58 | — |

(*1) The high-acceleration/deceleration option is not available for all 20W models and 30W model with 3mm lead.
(*2) The home sensor (HS) cannot be used on the non-motor end models.

## Actuator Specifications

| Item | Description |
|---|---|
| Drive System | Ball screw, ø10mm, rolled C10 |
| Positioning Repeatability | ±0.02mm |
| Lost Motion | 0.1mm or less |
| Guide | Single guide (guide rod diameter ø10mm, ball bush type) |
| Rod diameter | ø20mm |
| Non-rotating accuracy of rod | ±0.05 deg |
| Ambient operating temperature, humidity | 0 to 40°C, 85% RH or less (Non-condensing) |

## Dimensional Drawings

CAD drawings can be downloaded from the website. www.intelligentactuator.com

2D CAD 3D CAD

For Special Orders Appendix P.15

(*1) Connect the motor and encoder cables here. See page A-59 for details on cables.
(*2) After homing, the slider moves to the ME, therefore, please watch for any interference with surrounding objects.
ME : Mechanical end SE : Stroke end
(*3) The orientation of the bolt varies depending on the product.

### [No Brake]

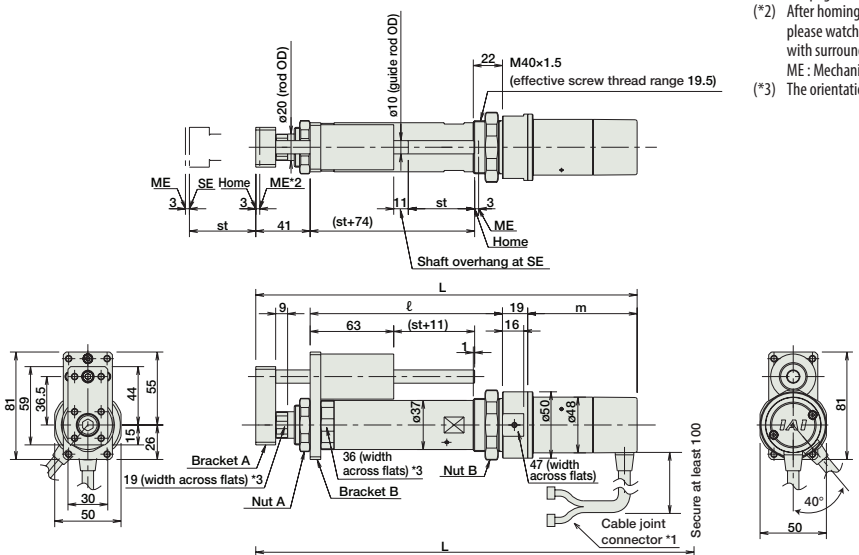


### [Brake-Equipped]

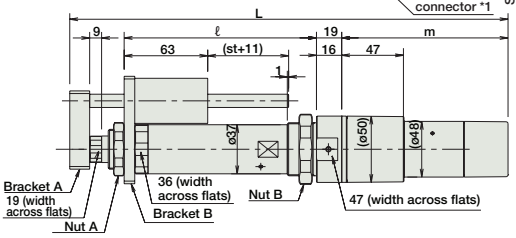


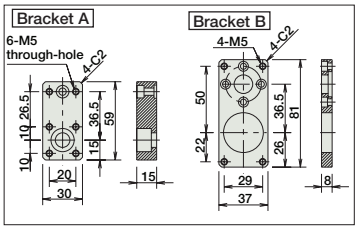


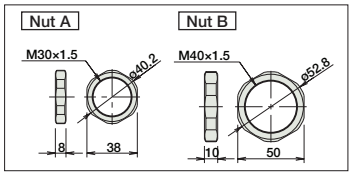


### ■ Dimensions and Weight by Stroke

**RCS2-RGS4C (without brake)**

| Stroke | | 50 | 100 | 150 | 200 | 250 | 300 |
|---|---|---|---|---|---|---|---|
| L | 20W | 285.5 | 335.5 | 385.5 | 435.5 | 485.5 | 535.5 |
| | 30W | 300.5 | 350.5 | 400.5 | 450.5 | 500.5 | 550.5 |
| ℓ | | 145 | 195 | 245 | 295 | 345 | 395 |
| m | 20W | 80.5 | | | | | |
| | 30W | 95.5 | | | | | |
| Weight (kg) | | 1.5 | 1.6 | 1.8 | 2.0 | 2.2 | 2.4 |

**RCS2-RGS4C (with brake)**

| Stroke | | 50 | 100 | 150 | 200 | 250 | 300 |
|---|---|---|---|---|---|---|---|
| L | 20W | 328.5 | 387.5 | 428.5 | 478.5 | 528.5 | 578.5 |
| | 30W | 343.5 | 393.5 | 443.5 | 493.5 | 543.5 | 593.5 |
| ℓ | | 145 | 195 | 245 | 295 | 345 | 395 |
| m | 20W | 123.5 | | | | | |
| | 30W | 138.5 | | | | | |
| Weight (kg) | | 1.7 | 1.8 | 2.0 | 2.2 | 2.4 | 2.6 |

## ③ Applicable Controllers

RCS2-series actuators can be operated with the following controllers. Select an appropriate controller type according to your application.

| Name | External view | Model number | Features | Maximum number of positioning points | Input power | Power supply capacity | Standard price | Reference page |
|---|---|---|---|---|---|---|---|---|
| Positioner mode | | SCON-CA-20Ⓘ-NP-2-Ⓘⅰ<br>SCON-CA-30DⒾ-NP-2-Ⓘⅰ | Up to 512 positioning points are supported. | 512 points | Single-phase 100VAC<br>Single-phase 200VAC<br>3-phase 200VAC (XSEL-P/Q/R/S ONLY) | 126 VA max.<br>*Power supply capacity will vary depending on the controller, so please refer to the instruction manual for details. | — | → P643 |
| Solenoid valve mode | | | Actuators can be operated through the same control used for solenoid valves. | 7 points | | | | |
| Field network type | | | Movement by numerical specification is supported. | 768 points | | | — | |
| Pulse-train input control type | | | Dedicated pulse-train input type | (—) | | | — | |
| Positioner multi-axis, network type | | MSCON-C-1-20Ⓘ-Ⓥ-0-Ⓘⅰ<br>MSCON-C-1-30DⒾ-Ⓥ-0-Ⓘⅰ | Up to 6 axes can be operated. Movement by numerical specification is supported. | 256 points | | | — | → P655 |
| Program control type, 1 to 2 axes | | SSEL-CS-1-20Ⓘ-NP-2-Ⓘⅰ<br>SSEL-CS-1-30DⒾ-NP-2-Ⓘⅰ | Program operation is supported. Up to 2 axes can be operated. | 20,000 points | | | — | → P685 |
| Program control type, 1 to 8 axes | | XSEL-Ⓘⅲ-1-20Ⓘ-N1-EEE-2-Ⓥ<br>XSEL-Ⓘⅲ-1-30DⒾ-N1-EEE-2-Ⓥ | Program operation is supported. Up to 8 axes can be operated. | Varies depending on the number of axes connected | | | — | → P695 |

* This is for the single-axis MSCON, SSEL, and XSEL.
* Ⓘ indicates the encoder type (I: Incremental / A: Absolute).
* Ⓘⅰ indicates the power-supply voltage type (1: 100V / 2: Single-phase 200V).
* Ⓘⅲ indicates the XSEL type (J / K / P / Q / R / S).
* Ⓥ indicates the power-supply voltage type (1: 100 V / 2: Single-phase 200V / 3: Three-phase 200V).
* Ⓥ indicates field network specification symbol.

Slider Type
Mini
Standard
Controllers Integrated
Rod Type
Mini
Standard
Controllers Integrated
Table/ Arm/ Flat Type
Mini
Standard
Gripper/ Rotary Type
Linear Servo Type
Clean-room Type
Splash-Proof Type
Pulse Motor
Servo Motor (24V)
Servo Motor (200V)
Linear Servo Motor

# RCS2-RGS5C

Robo Cylinder, Rod Type with Single Guide, Actuator Width 55mm, 200V Servo Motor, Coupled

**Model Specification Items**

| RCS2 — RGS5C — | □ — | □ — | □ — | □ — | □ — | □ — | □ |
|---|---|---|---|---|---|---|---|
| Series | Type | Encoder type | Motor type | Lead | Stroke | Applicable controller | Cable length | Options |
| | | I : Incremental<br>A: Absoulute | 60 : 60W Servo motor<br>100 : 100W Servo motor | 16 :16mm<br>8 : 8mm<br>4 : 4mm | 50: 50mm<br>~<br>300: 300mm<br>(50mm pitch increments) | T1: XSEL-J/K<br>T2: SCON<br>MSCON<br>SSEL<br>XSEL-P/Q<br>XSEL-R/S | N: None<br>P: 1m<br>S: 3m<br>M: 5m<br>X□□: Custom Length<br>R□□: Robot Cable | See options below. |

* See page Pre-47 for details on the model descriptions.

CE RoHS

*CE compliance is optional.

## For High Acceleration/Deceleration (*1)

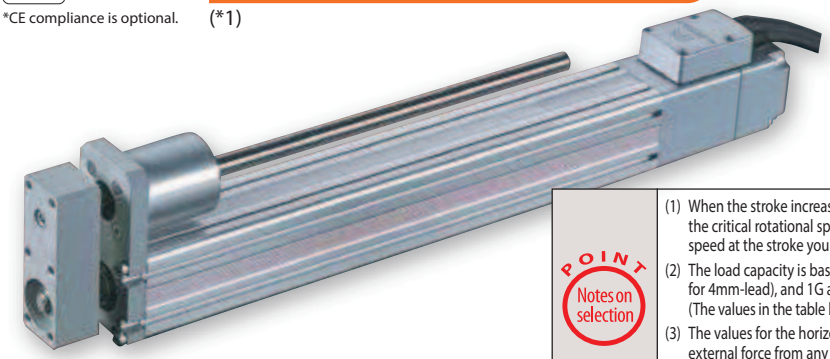

(*1) Except all 60W models and 100W 4mm lead models

Technical References Appendix P.5

**POINT — Notes on selection**

(1) When the stroke increases, the maximum speed will drop to prevent the ball screw from reaching the critical rotational speed. Use the actuator specification table below to check the maximum speed at the stroke you desire.

(2) The load capacity is based on operating the standard and power-saving models at 0.3G (0.2G for 4mm-lead), and 1G acceleration for the high-acceleration models (4mm-lead model excluded). (The values in the table below are the upper limits, even if the acceleration/deceleration is decreased.)

(3) The values for the horizontal load capacity assume the use of an external guide, so that there is no external force from any direction other than the forward/backward direction of the rod. See the technical resources (page A-111) for the allowable weight using the supplied guide alone.

(4) See page A-71 for details on push motion.

## Actuator Specifications

### Leads and Payloads

| Model number | Motor output (W) | Lead (mm) | Max. Load Capacity Horizontal (kg) | Max. Load Capacity Vertical (kg) | Rated thrust (N) | Stroke (mm) |
|---|---|---|---|---|---|---|
| RCS2-RGS5C-①-60-16-②-③-④-⑤ | 60 | 16 | 12.0 | 1.3 | 63.8 | 50~300 (every 50mm) |
| RCS2-RGS5C-①-60-8-②-③-④-⑤ | | 8 | 25.0 | 4.3 | 127.5 | |
| RCS2-RGS5C-①-60-4-②-③-④-⑤ | | 4 | 50.0 | 10.8 | 255.1 | |
| RCS2-RGS5C-①-100-16-②-③-④-⑤ | 100 | 16 | 15.0 | 2.8 | 105.8 | |
| RCS2-RGS5C-①-100-8-②-③-④-⑤ | | 8 | 30.0 | 8.3 | 212.7 | |
| RCS2-RGS5C-①-100-4-②-③-④-⑤ | | 4 | 60.0 | 17.3 | 424.3 | |

### Stroke and Maximum Speed

| Lead \ Stroke | 50~250 (every 50mm) | 300 (mm) |
|---|---|---|
| 16 | 800 | 755 |
| 8 | 400 | 377 |
| 4 | 200 | 188 |

(Unit: mm/s)

Code explanation ① Encoder ② Stroke ③ Applicable controller ④ Cable length ⑤ Options *See page A-71 for details on push motion.

## ①Encoder Type/②Stroke

| ②Stroke (mm) | Standard price ①Encoder Type Incremental Motor Output (W) 60W | Incremental 100W | Absolute Motor Output (W) 60W | Absolute 100W |
|---|---|---|---|---|
| 50 | — | — | — | — |
| 100 | — | — | — | — |
| 150 | — | — | — | — |
| 200 | — | — | — | — |
| 250 | — | — | — | — |
| 300 | — | — | — | — |

## ④Cable Length

| Type | Cable symbol | Standard Price |
|---|---|---|
| Standard | **P** (1m) | — |
| | **S** (3m) | — |
| | **M** (5m) | — |
| Special length | **X06** (6m) ~ **X10** (10m) | — |
| | **X11** (11m) ~ **X15** (15m) | — |
| | **X16** (16m) ~ **X20** (20m) | — |
| Robot Cable | **R01** (1m) ~ **R03** (3m) | — |
| | **R04** (4m) ~ **R05** (5m) | — |
| | **R06** (6m) ~ **R10** (10m) | — |
| | **R11** (11m) ~ **R15** (15m) | — |
| | **R16** (16m) ~ **R20** (20m) | — |

* See page A-59 for cables for maintenance.

## ⑤Options

| Name | Option code | See page | Standard price |
|---|---|---|---|
| Connector cable exit direction | **A2** | → A-41 | — |
| Brake | **B** | → A-42 | — |
| CE compliance | **CE** | → A-42 | — |
| Foot bracket | **FT** | → A-49 | — |
| Guide mounting direction | **GS2~GS4** | → A-50 | — |
| High acceleration/deceleration (*1) | **HA** | → A-50 | — |

(*1) The high-acceleration/deceleration option is not available for all 60W models and 100W model with 4mm lead.

## Actuator Specifications

| Item | Description |
|---|---|
| Drive System | Ball screw, ø12mm, rolled C10 |
| Positioning Repeatability | ±0.02mm |
| Lost Motion | 0.1mm or less |
| Guide | Single guide (guide rod diameter ø10mm, ball bush type) |
| Rod diameter | ø30mm |
| Non-rotating accuracy of rod | ±0.1 deg |
| Ambient operating temperature, humidity | 0 to 40°C, 85% RH or less (Non-condensing) |

## Dimensional Drawings

CAD drawings can be downloaded from the website. www.intelligentactuator.com

2D CAD 3D CAD

*The RGS5C is not available in non-motor end configuration, due to its construction.

For Special Orders Appendix P.15

(*1) Connect the motor and encoder cables here. See page A-59 for details on cables.
(*2) After homing, the slider moves to the ME, therefore, please watch for any interference with surrounding objects.
ME : Mechanical end SE : Stroke end

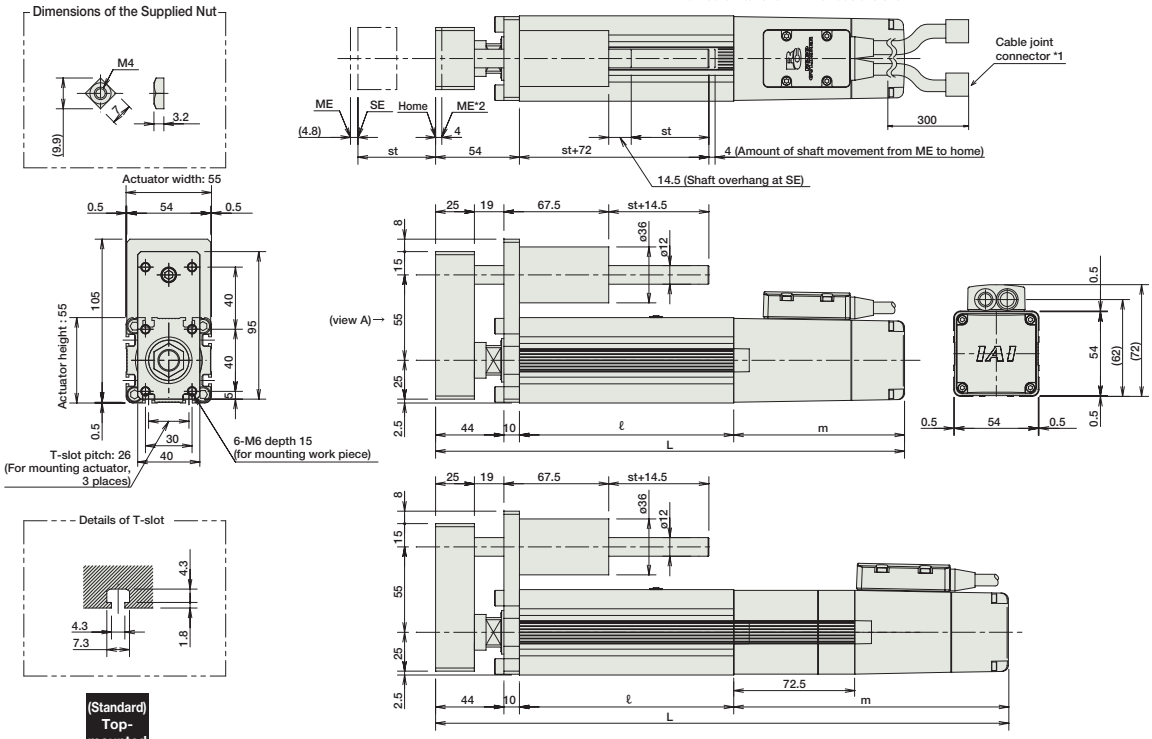


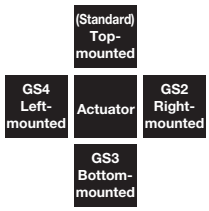


Guide mounting direction (as viewed from view A)

### ■ Dimensions and Weight by Stroke

**RCS2-RGS5C (without brake)**

| Stroke | | 50 | 100 | 150 | 200 | 250 | 300 |
|---|---|---|---|---|---|---|---|
| L | 60W | 284 | 334 | 384 | 434 | 484 | 534 |
| | 100W | 302 | 352 | 402 | 452 | 502 | 552 |
| ℓ | | 138 | 188 | 238 | 288 | 338 | 388 |
| m | 60W | 92 | | | | | |
| | 100W | 110 | | | | | |
| Weight (kg) | | 2.5 | 2.8 | 3.2 | 3.6 | 3.9 | 4.3 |

**RCS2-RGS5C (with brake)**

| Stroke | | 50 | 100 | 150 | 200 | 250 | 300 |
|---|---|---|---|---|---|---|---|
| L | 60W | 356.5 | 406.5 | 456 | 506.5 | 556.5 | 606.5 |
| | 100W | 374.5 | 424.5 | 474.5 | 524.5 | 574.5 | 624.5 |
| ℓ | | 138 | 188 | 238 | 288 | 338 | 388 |
| m | 60W | 164.5 | | | | | |
| | 100W | 182.5 | | | | | |
| Weight (kg) | | 2.8 | 3.1 | 3.5 | 3.9 | 4.2 | 4.6 |

## ③ Applicable Controllers

RCS2-series actuators can be operated with the following controllers. Select an appropriate controller type according to your application.

| Name | External view | Model number | Features | Maximum number of positioning points | Input power | Power supply capacity | Standard price | Reference page |
|---|---|---|---|---|---|---|---|---|
| Positioner mode | | SCON-CA-60Ⓘ-NP-2-Ⓘⓘ<br>SCON-CA-100Ⓘ-NP-2-Ⓘⓘ | Up to 512 positioning points are supported. | 512 points | Single-phase 100VAC<br>Single-phase 200VAC<br>3-phase 200VAC (XSEL-P/Q/R/S ONLY) | 314 VA max.<br>*Power supply capacity will vary depending on the controller, so please refer to the instruction manual for details. | — | → P643 |
| Solenoid valve mode | | | Actuators can be operated through the same control used for solenoid valves. | 7 points | | | | |
| Field network type | | | Movement by numerical specification is supported. | 768 points | | | — | |
| Pulse-train input control type | | | Dedicated pulse-train input type | (—) | | | — | |
| Positioner multi-axis, network type | | MSCON-C-1-60Ⓘ-Ⓥ-0-Ⓘⓘ<br>MSCON-C-1-100Ⓘ-Ⓥ-0-Ⓘⓘ | Up to 6 axes can be operated. Movement by numerical specification is supported. | 256 points | | | — | → P655 |
| Program control type, 1 to 2 axes | | SSEL-CS-1-60Ⓘ-NP-2-Ⓘⓘ<br>SSEL-CS-1-100Ⓘ-NP-2-Ⓘⓘ | Program operation is supported. Up to 2 axes can be operated. | 20,000 points | | | — | → P685 |
| Program control type, 1 to 8 axes | | XSEL-Ⓘⓘⓘ-1-60Ⓘ-N1-EEE-2-Ⓥ<br>XSEL-Ⓘⓘⓘ-1-100Ⓘ-N1-EEE-2-Ⓥ | Program operation is supported. Up to 8 axes can be operated. | Varies depending on the number of axes connected | | | — | → P695 |

* This is for the single-axis MSCON, SSEL, and XSEL.
* ⓘⓘ indicates the power-supply voltage type (1: 100V / 2: Single-phase 200V).
* Ⓥ indicates the power-supply voltage type (1: 100 V / 2: Single-phase 200V / 3: Three-phase 200V).
* Ⓘ indicates the encoder type (I: Incremental / A: Absolute).
* ⓘⓘⓘ indicates the XSEL type (J / K / P / Q / R / S).
* Ⓥ indicates field network specification symbol.

Slider Type
Mini
Standard
Controllers Integrated
Rod Type
Mini
Standard
Controllers Integrated
Table/ Arm/ Flat Type
Mini
Standard
Gripper/ Rotary Type
Linear Servo Type
Clean-room Type
Splash-Proof Type
Pulse Motor
Servo Motor (24V)
Servo Motor (200V)
Linear Servo Motor

# RCS2-RGS4D

Robo Cylinder, Rod Type with Single Guide, ø37mm Diameter, 200V Servo Motor, Built-In Model

**Model Specification Items**

RCS2 — RGS4D — □ — □ — □ — □ — □ — □ — □

| Series | Type | Encoder type | Motor type | Lead | Stroke | Applicable controller | Cable length | Options |
|---|---|---|---|---|---|---|---|---|
| | | I : Incremental<br>A: Absoulute | 20 : 20W Servo motor<br>30 : 30W Servo motor | 12 : 12mm<br>6 : 6mm<br>3 : 3mm | 50: 50mm<br>~<br>300: 300mm<br>(50mm pitch increments) | T1: XSEL-J/K<br>T2: SCON<br>MSCON<br>SSEL<br>XSEL-P/Q<br>XSEL-R/S | N: None<br>P: 1m<br>S: 3m<br>M: 5m<br>X□□: Custom Length<br>R□□: Robot Cable | See options below. |

* See page Pre-47 for details on the model descriptions.

CE RoHS

*CE compliance is optional.

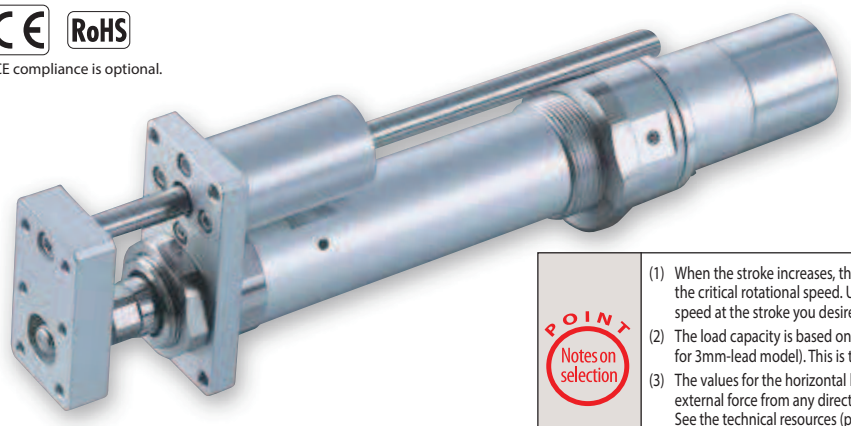

Technical References Appendix P.5

**POINT — Notes on selection**

(1) When the stroke increases, the maximum speed will drop to prevent the ball screw from reaching the critical rotational speed. Use the actuator specification table below to check the maximum speed at the stroke you desire.
(2) The load capacity is based on operating the standard and power-saving models at 0.3G (0.2G for 3mm-lead model). This is the upper limit of the acceleration.
(3) The values for the horizontal load capacity assume the use of an external guide, so that there is no external force from any direction other than the forward/backward direction of the rod. See the technical resources (page A-111) for the allowable weight using the supplied guide alone.
(4) See page A-71 for details on push motion.

## Actuator Specifications

### Leads and Payloads

| Model number | Motor output (W) | Lead (mm) | Max. Load Capacity Horizontal (kg) | Max. Load Capacity Vertical (kg) | Rated thrust (N) | Stroke (mm) |
|---|---|---|---|---|---|---|
| RCS2-RGS4D-①-20-12-②-③-④-⑤ | 20 | 12 | 3.0 | 0.5 | 18.9 | 50~300 (every 50mm) |
| RCS2-RGS4D-①-20-6-②-③-④-⑤ | | 6 | 6.0 | 1.5 | 37.7 | |
| RCS2-RGS4D-①-20-3-②-③-④-⑤ | | 3 | 12.0 | 3.5 | 75.4 | |
| RCS2-RGS4D-①-30-12-②-③-④-⑤ | 30 | 12 | 4.0 | 1.0 | 28.3 | |
| RCS2-RGS4D-①-30-6-②-③-④-⑤ | | 6 | 9.0 | 2.5 | 56.6 | |
| RCS2-RGS4D-①-30-3-②-③-④-⑤ | | 3 | 18.0 | 6.0 | 113.1 | |

### Stroke and Maximum Speed

| Lead \ Stroke | 50~300 (every 50mm) |
|---|---|
| 12 | 600 |
| 6 | 300 |
| 3 | 150 |

(Unit: mm/s)

Code explanation ① Encoder ② Stroke ③ Applicable controller ④ Cable length ⑤ Options *See page A-71 for details on push motion.

## ①Encoder Type/②Stroke

| ②Stroke (mm) | Standard price ①Encoder Type Incremental Motor Output (W) 20W | Incremental 30W | Absolute Motor Output (W) 20W | Absolute 30W |
|---|---|---|---|---|
| 50 | — | — | — | — |
| 100 | — | — | — | — |
| 150 | — | — | — | — |
| 200 | — | — | — | — |
| 250 | — | — | — | — |
| 300 | — | — | — | — |

## ④Cable Length

| Type | Cable symbol | Standard Price |
|---|---|---|
| Standard | **P** (1m) | — |
| | **S** (3m) | — |
| | **M** (5m) | — |
| Special length | **X06** (6m) ~ **X10** (10m) | — |
| | **X11** (11m) ~ **X15** (15m) | — |
| | **X16** (16m) ~ **X20** (20m) | — |
| Robot Cable | **R01** (1m) ~ **R03** (3m) | — |
| | **R04** (4m) ~ **R05** (5m) | — |
| | **R06** (6m) ~ **R10** (10m) | — |
| | **R11** (11m) ~ **R15** (15m) | — |
| | **R16** (16m) ~ **R20** (20m) | — |

* See page A-59 for cables for maintenance.

## ⑤Options

| Name | Option code | See page | Standard price |
|---|---|---|---|
| CE compliance | **CE** | → A-42 | — |
| Foot bracket | **FT** | → A-49 | — |
| Home sensor | **HS** | → A-50 | — |
| Non-motor end specification | **NM** | → A-52 | — |
| Trunnion bracket (back) | **TRR** | → A-58 | — |

*The home sensor (HS) cannot be used on the non-motor end models.

## Actuator Specifications

| Item | Description |
|---|---|
| Drive System | Ball screw, ø10mm, rolled C10 |
| Positioning Repeatability | ±0.02mm |
| Lost Motion | 0.1mm or less |
| Guide | Single guide (guide rod diameter ø10mm, ball bush type) |
| Rod diameter | ø20mm |
| Non-rotating accuracy of rod | ±0.05 deg |
| Ambient operating temperature, humidity | 0 to 40°C, 85% RH or less (Non-condensing) |

## Dimensional Drawings

CAD drawings can be downloaded from the website. www.intelligentactuator.com

For Special Orders Appendix P.15

2D CAD

(*1) Connect the motor and encoder cables here. See page A-59 for details on cables.
(*2) After homing, the slider moves to the ME, therefore, please watch for any interference with surrounding objects.
ME : Mechanical end SE : Stroke end

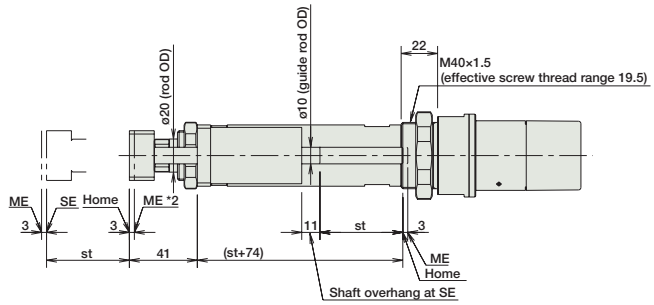


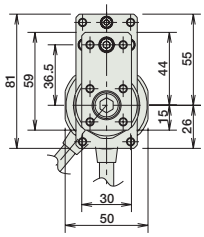


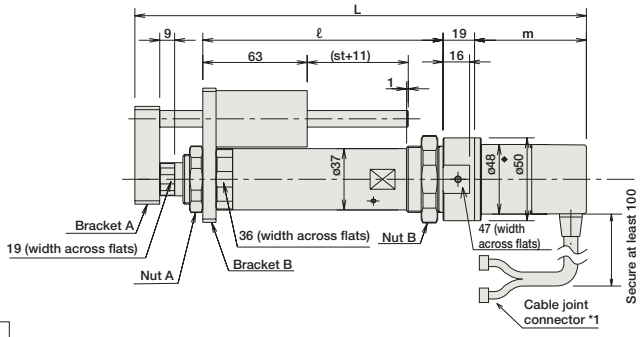


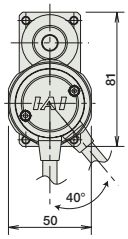


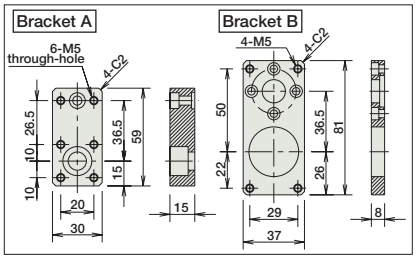


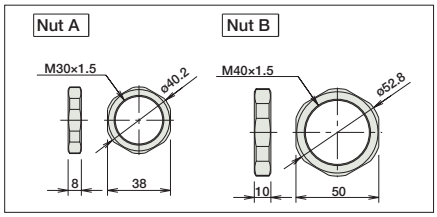


### Dimensions and Weight by Stroke

**RCS2-RGS4D (without brake)**

| Stroke | | 50 | 100 | 150 | 200 | 250 | 300 |
|---|---|---|---|---|---|---|---|
| L | 20W | 263.5 | 313.5 | 363.5 | 413.5 | 463.5 | 513.5 |
| | 30W | 278.5 | 328.5 | 378.5 | 428.5 | 478.5 | 528.5 |
| ℓ | | 145 | 195 | 245 | 295 | 345 | 395 |
| m | 20W | 58.5 | | | | | |
| | 30W | 73.5 | | | | | |
| Weight (kg) | | 1.3 | 1.5 | 1.7 | 1.9 | 2.1 | 2.3 |

RCS2-RGS4D models are not equipped with a brake.

## ③ Applicable Controllers

RCS2-series actuators can be operated with the following controllers. Select an appropriate controller type according to your application.

| Name | External view | Model number | Features | Maximum number of positioning points | Input power | Power supply capacity | Standard price | Reference page |
|---|---|---|---|---|---|---|---|---|
| Positioner mode | | SCON-CA-20Ⓘ-NP-2-Ⓘⅰ<br>SCON-CA-30DⓘⅰNP-2-Ⓘⅰ | Up to 512 positioning points are supported. | 512 points | Single-phase 100VAC<br>Single-phase 200VAC<br>3-phase 200VAC (XSEL-P/Q/R/S ONLY) | 126 VA max.<br>*Power supply capacity will vary depending on the controller, so please refer to the instruction manual for details. | — | → P643 |
| Solenoid valve mode | | | Actuators can be operated through the same control used for solenoid valves. | 7 points | | | | |
| Field network type | | | Movement by numerical specification is supported. | 768 points | | | — | |
| Pulse-train input control type | | | Dedicated pulse-train input type | (—) | | | — | |
| Positioner multi-axis, network type | | MSCON-C-1-20Ⓘ-Ⓥ-0-Ⓘⅰ<br>MSCON-C-1-30DⓘⅰⓋ-0-Ⓘⅰ | Up to 6 axes can be operated. Movement by numerical specification is supported. | 256 points | | | — | → P655 |
| Program control type, 1 to 2 axes | | SSEL-CS-1-20Ⓘ-NP-2-Ⓘⅰ<br>SSEL-CS-1-30DⓘⅰNP-2-Ⓘⅰ | Program operation is supported. Up to 2 axes can be operated. | 20,000 points | | | — | → P685 |
| Program control type, 1 to 8 axes | | XSEL-Ⓘⅱⅲ-1-20Ⓘ-N1-EEE-2-Ⓘⅴ<br>XSEL-Ⓘⅱⅲ-1-30DⓘN1-EEE-2-Ⓘⅴ | Program operation is supported. Up to 8 axes can be operated. | Varies depending on the number of axes connected | | | — | → P695 |

* This is for the single-axis MSCON, SSEL, and XSEL.
* ⓘ indicates the encoder type (I: Incremental / A: Absolute).
* ⓘⅰ indicates the power-supply voltage type (1: 100V / 2: Single-phase 200V).
* ⓘⅱ indicates the XSEL type (J / K / P / Q / R / S).
* ⓘⅴ indicates the power-supply voltage type (1: 100 V / 2: Single-phase 200V / 3: Three-phase 200V).
* ⓘⅴ indicates field network specification symbol.

Slider Type
Mini
Standard
Controllers Integrated
Rod Type
Mini
Standard
Controllers Integrated
Table/ Arm/ Flat Type
Mini
Standard
Gripper/ Rotary Type
Linear Servo Type
Clean-room Type
Splash-Proof Type
Pulse Motor
Servo Motor (24V)
Servo Motor (200V)
Linear Servo Motor

# RCS2-SRGS7BD

Robo Cylinder, Rod Type with Single Guide, Actuator Width 75mm, 200V Servo Motor, Short-Length Model

**Model Specification Items**

| Series | Type | Encoder type | Motor type | Lead | Stroke | Applicable controller | Cable length | Options |
|---|---|---|---|---|---|---|---|---|
| RCS2 | SRGS7BD | I | □ | □ | □ | □ | □ | □ |
| | | I : Incremental | 60 : 60W Servo motor<br>100 : 100W Servo motor<br>150 : 150W Servo Motor | 16 : 16mm<br>8 : 8mm<br>4 : 4mm | 50: 50mm<br>~<br>300: 300mm<br>(50mm pitch increments) | T1: XSEL-J/K<br>T2: SCON<br>SSEL<br>XSEL-P/Q | N: None<br>P: 1m<br>S: 3m<br>M: 5m<br>X□□: Custom Length<br>R□□: Robot Cable | See options below. |

* See page Pre-47 for details on the model descriptions.

RoHS

Technical References Appendix P.5

**POINT** Notes on selection

(1) When operated at the rated acceleration, the maximum load capacity is the load capacity at the rated acceleration.
(2) When operated at the maximum acceleration, the maximum load capacity is the load capacity at the maximum acceleration.
(3) The values for the horizontal load capacity assume the use of an external guide, so that there is no external force from any direction other than the forward/backward direction of the rod. See the technical resources (page A-111) for the allowable weight using the supplied guide alone.
(4) See page A-71 for details on push motion.

## Actuator Specifications

### Leads and Payloads

| Model number | Motor output (W) | Lead (mm) | Rated Acceleration (G) | Load Capacity at Rated Acceleration Horizontal (kg) | Load Capacity at Rated Acceleration Vertical (kg) | Max Acceleration (G) | Load Capacity at Max. Acceleration Horizontal (kg) | Load Capacity at Max. Acceleration Vertical (kg) | Rated thrust (N) | Stroke (mm) |
|---|---|---|---|---|---|---|---|---|---|---|
| RCS2-SRGS7BD-I-60-16-①-②-③-④ | 60 | 16 | 0.25 | 5 | 1.5 | 0.35 | 2.5 | 0.5 | 63 | 50~300 (every 50mm) |
| RCS2-SRGS7BD-I-60-8-①-②-③-④ | | 8 | 0.15 | 10 | 4.5 | 0.25 | 5 | 2 | 127 | |
| RCS2-SRGS7BD-I-60-4-①-②-③-④ | | 4 | 0.05 | 20 | 9.5 | 0.15 | 10 | 4.5 | 254 | |
| RCS2-SRGS7BD-I-100-16-①-②-③-④ | 100 | 16 | 0.3 | 10 | 3 | 0.4 | 5 | 1 | 103 | |
| RCS2-SRGS7BD-I-100-8-①-②-③-④ | | 8 | 0.2 | 22 | 8.5 | 0.3 | 10 | 4 | 207 | |
| RCS2-SRGS7BD-I-100-4-①-②-③-④ | | 4 | 0.1 | 40 | 19 | 0.2 | 20 | 8.5 | 414 | |
| RCS2-SRGS7BD-I-150-16-①-②-③-④ | 150 | 16 | 0.3 | 15 | 6 | 0.4 | 7.5 | 2.5 | 157 | |
| RCS2-SRGS7BD-I-150-8-①-②-③-④ | | 8 | 0.2 | 35 | 14 | 0.3 | 17.5 | 6.5 | 314 | |
| RCS2-SRGS7BD-I-150-4-①-②-③-④ | | 4 | 0.1 | 55 | 22 | 0.2 | 27.5 | 10.5 | 628 | |

Code explanation ① Stroke ② Applicable controller ③ Cable length ④ Options *See page A-71 for details on push motion.

### Stroke and Maximum Speed

| Lead \ Stroke | 50~300 (every 50mm) |
|---|---|
| 16 | 800 |
| 8 | 400 |
| 4 | 200 |

(Unit: mm/s)

### ① Stroke

| ①Stroke (mm) | Standard price Motor Output (W) 60W | 100W | 150W |
|---|---|---|---|
| 50 | — | — | — |
| 100 | — | — | — |
| 150 | — | — | — |
| 200 | — | — | — |
| 250 | — | — | — |
| 300 | — | — | — |

### ③ Cable Length

| Type | Cable symbol | Standard Price |
|---|---|---|
| Standard | **P** (1m) | — |
| | **S** (3m) | — |
| | **M** (5m) | — |
| Special length | **X06** (6m) ~ **X10** (10m) | — |
| | **X11** (11m) ~ **X15** (15m) | — |
| | **X16** (16m) ~ **X20** (20m) | — |
| Robot Cable | **R01** (1m) ~ **R03** (3m) | — |
| | **R04** (4m) ~ **R05** (5m) | — |
| | **R06** (6m) ~ **R10** (10m) | — |
| | **R11** (11m) ~ **R15** (15m) | — |
| | **R16** (16m) ~ **R20** (20m) | — |

* See page A-59 for cables for maintenance.

### ④ Options

| Name | Option code | See page | Standard price |
|---|---|---|---|
| Connector cable exit direction | **A1~A3** | → A-41 | — |
| Brake | **B** | → A-42 | — |
| Foot bracket | **FT** | → A-49 | — |
| Guide mounting direction | **GS2~GS4** | → A-50 | — |
| Extended rod tip | **RE** | → A-54 | — |

### Actuator Specifications

| Item | Description |
|---|---|
| Drive System | Ball screw, ø12mm, rolled C10 |
| Positioning Repeatability | ±0.02mm |
| Lost Motion | 0.1mm or less |
| Guide | Single guide (guide rod diameter ø10mm, ball bush type) |
| Rod diameter | ø35mm |
| Non-rotating accuracy of rod | ±0.1 deg |
| Ambient operating temperature, humidity | 0 to 40°C, 85% RH or less (Non-condensing) |

## Dimensional Drawings

CAD drawings can be downloaded from the website. www.intelligentactuator.com

2D CAD

*The SRGS7BD is not available in n on-motor end configuration, due to its construction.

For Special Orders Appendix P.15

(*1) Connect the motor and encoder cables here. See page A-59 for details on cables.
(*2) After homing, the slider moves to the ME, therefore, please watch for any interference with surrounding objects.
ST: Stroke
SE : Stroke end
ME : Mechanical end

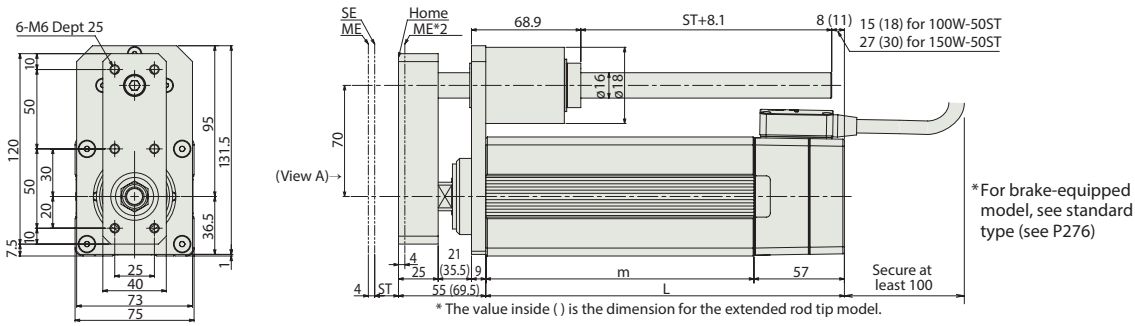


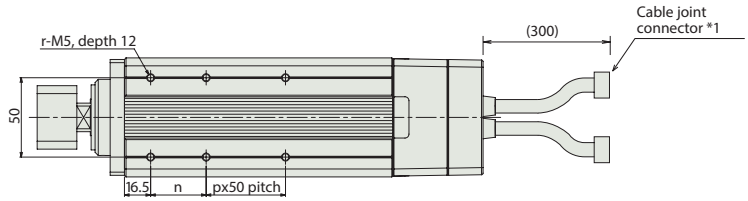


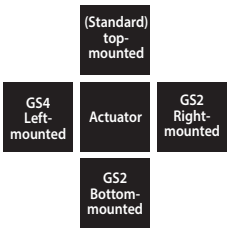


Guide mounting direction (as viewed from view A)

Note:
A slit is provided in the side of the actuator body to prevent pauses due to forward/backward operation.
Please make a separate request for a dustproof/splash-proof model. Please be careful when operating in the dusty environment. The dust may enter inside from the slit.

### Dimensions and Weight by Stroke

| Stroke | | 50 | 100 | 150 | 200 | 250 | 300 |
|---|---|---|---|---|---|---|---|
| L | 60W | 126 | 176 | 226 | 276 | 326 | 376 |
| | 100W | 133 | 176 | 226 | 276 | 326 | 376 |
| | 150W | 145 | 176 | 226 | 276 | 326 | 376 |
| m | 60W | 69 | 119 | 169 | 219 | 269 | 319 |
| | 100W | 76 | 119 | 169 | 219 | 269 | 319 |
| | 150W | 88 | 119 | 169 | 219 | 269 | 319 |
| n | | 25 | 35 | 35 | 35 | 35 | 35 |
| p | | 0 | 0 | 1 | 2 | 3 | 4 |
| r | | 4 | 4 | 6 | 8 | 10 | 12 |
| Weight (kg) | 60W | 3.5 | 4.1 | 4.8 | 5.4 | 6.1 | 6.7 |
| | 100W | 3.7 | 4.3 | 4.9 | 5.6 | 6.2 | 6.9 |
| | 150W | 4 | 4.5 | 5.1 | 5.8 | 6.4 | 7.1 |

## ② Applicable Controllers

RCS2 series actuators can be operated with the controllers indicated below. Select the type according to your intended application.

| Name | External view | Model number | Features | Maximum number of positioning points | Input power | Power-supply capacity | Standard price | Reference page |
|---|---|---|---|---|---|---|---|---|
| Positioner mode | | SCON-CA-ⓘI-NP-2-ⓘⓘ | Up to 512 positioning points are supported. | 512 points | Single-phase 100VAC<br>Single-phase 200VAC<br>3-phase 200VAC (XSEL-P/Q only) | 408 VA max.<br>* Varies depending on the controller. Refer to the operation manual for details. | — | → P643 |
| Solenoid valve mode | | | Actuators can be operated through the same control used for solenoid valves. | 7 points | | | | |
| Field network type | | | Movement by numerical specification is supported. | 768 points | | | | |
| Pulse-train input control type | | | Dedicated pulse-train input type | (—) | | | — | |
| Program control type 1 or 2 axes | | SSEL-CS-1-ⓘI-NP-2-ⓘⓘ | Program operation is supported<br>Up to two axes can be operated | 20,000 points | | | — | → P685 |
| Program control type 1 or 6 axes | | XSEL-ⓘⓘⓘ-1-ⓘI-N1-EEE-2-ⓘⓥ | Program operation is supported<br>Up to six axes can be operated | 20,000 points | | | — | → P695 |

* This is for the single-axis SSEL, and XSEL.
* ⓘⓘ Indicates the power-supply voltage type (1: 100 V / 2: Single-phase 200 V).
* ⓘⓥ Indicates the power-supply voltage type (1: 100 V / 2: Single-phase 200 V / 3: Three-phase 200 V).
* ⓘ Indicates the wattage (60/100/150).
* ⓘⓘⓘ Indicates the XSEL type (J / K / P / Q ).

Please note that this model cannot be connected to the XSEL-P/Q type (5-axis/6-axis), XSEL-R/S type, or MSCON.

Slider Type
Mini
Standard
Controllers Integrated
Rod Type
Mini
Standard
Controllers Integrated
Table/ Arm/ Flat Type
Mini
Standard
Gripper/ Rotary Type
Linear Servo Type
Clean-room Type
Splash-Proof Type
Pulse Motor
Servo Motor (24V)
Servo Motor (200V)
Linear Servo Motor

# RCS2-RGD4C

Robo Cylinder, Rod Type with Double Guide, ø37mm Diameter, 200V Servo Motor, Coupled

**Model Specification Items**

| RCS2 | RGD4C | ☐ | ☐ | ☐ | ☐ | ☐ | ☐ | ☐ |
|---|---|---|---|---|---|---|---|---|
| Series | Type | Encoder type | Motor type | Lead | Stroke | Applicable controller | Cable length | Options |
| | | I : Incremental<br>A: Absoulute | 20 : 20W Servo motor<br>30 : 30W Servo motor | 12 : 12mm<br>6 : 6mm<br>3 : 3mm | 50: 50mm<br>~<br>300: 300mm<br>(50mm pitch increments) | T1: XSEL-J/K<br>T2: SCON<br>MSCON<br>SSEL<br>XSEL-P/Q<br>XSEL-R/S | N: None<br>P: 1m<br>S: 3m<br>M: 5m<br>X□□: Custom Length<br>R□□: Robot Cable | See options below. |

* See page Pre-47 for details on the model descriptions.

CE RoHS
*CE compliance is optional.

## For High Acceleration/Deceleration (*1)

(*1) Except all 20W models and 30W 3mm lead models

Technical References Appendix P.5

**POINT** Notes on selection

(1) When the stroke increases, the maximum speed will drop to prevent the ball screw from reaching the critical rotational speed. Use the actuator specification table below to check the maximum speed at the stroke you desire.
(2) The load capacity is based on operating the standard and power-saving models at 0.3G (0.2G for 3mm-lead), and 1G acceleration for the high-acceleration models (3mm-lead model excluded). (The values in the table below are the upper limits, even if the acceleration/deceleration is decreased.)
(3) The values for the horizontal load capacity assume the use of an external guide, so that there is no external force from any direction other than the forward/backward direction of the rod. See the technical resources (page A-112) for the allowable weight using the supplied guide alone.
(4) See page A-71 for details on push motion.

## Actuator Specifications

### Leads and Payloads

| Model number | Motor output (W) | Lead (mm) | Max. Load Capacity Horizontal (kg) | Max. Load Capacity Vertical (kg) | Rated thrust (N) | Stroke (mm) |
|---|---|---|---|---|---|---|
| RCS2-RGD4C-①-20-12-②-③-④-⑤ | 20 | 12 | 3.0 | 0.5 | 18.9 | 50~300 (every 50mm) |
| RCS2-RGD4C-①-20-6-②-③-④-⑤ | | 6 | 6.0 | 1.5 | 37.7 | |
| RCS2-RGD4C-①-20-3-②-③-④-⑤ | | 3 | 12.0 | 3.5 | 75.4 | |
| RCS2-RGD4C-①-30-12-②-③-④-⑤ | 30 | 12 | 4.0 | 1.0 | 28.3 | |
| RCS2-RGD4C-①-30-6-②-③-④-⑤ | | 6 | 9.0 | 2.5 | 56.6 | |
| RCS2-RGD4C-①-30-3-②-③-④-⑤ | | 3 | 18.0 | 6.0 | 113.1 | |

### Stroke and Maximum Speed

| Lead \ Stroke | 50~300 (every 50mm) |
|---|---|
| 12 | 600 |
| 6 | 300 |
| 3 | 150 |

(Unit: mm/s)

Code explanation ① Encoder ② Stroke ③ Applicable controller ④ Cable length ⑤ Options *See page A-71 for details on push motion.

## ①Encoder Type/②Stroke

| ②Stroke (mm) | Standard price ①Encoder Type Incremental Motor Output (W) 20W | Incremental 30W | Absolute Motor Output (W) 20W | Absolute 30W |
|---|---|---|---|---|
| 50 | — | — | — | — |
| 100 | — | — | — | — |
| 150 | — | — | — | — |
| 200 | — | — | — | — |
| 250 | — | — | — | — |
| 300 | — | — | — | — |

## ④Cable Length

| Type | Cable symbol | Standard Price |
|---|---|---|
| Standard | **P** (1m) | — |
| | **S** (3m) | — |
| | **M** (5m) | — |
| Special length | **X06** (6m) ~ **X10** (10m) | — |
| | **X11** (11m) ~ **X15** (15m) | — |
| | **X16** (16m) ~ **X20** (20m) | — |
| Robot Cable | **R01** (1m) ~ **R03** (3m) | — |
| | **R04** (4m) ~ **R05** (5m) | — |
| | **R06** (6m) ~ **R10** (10m) | — |
| | **R11** (11m) ~ **R15** (15m) | — |
| | **R16** (16m) ~ **R20** (20m) | — |

* See page A-59 for cables for maintenance.

## ⑤Options

| Name | Option code | See page | Standard price |
|---|---|---|---|
| Brake | **B** | → A-42 | — |
| CE compliance | **CE** | → A-42 | — |
| Foot bracket | **FT** | → A-49 | — |
| High-acceleration/deceleration (*1) | **HA** | → A-50 | — |
| Home sensor (*2) | **HS** | → A-50 | — |
| Non-motor end specification | **NM** | → A-52 | — |
| Trunnion bracket (back) | **TRR** | → A-58 | — |

(*1) The high-acceleration/deceleration option is not available for all 20W models and 30W model with 3mm lead.
(*2) The home sensor (HS) cannot be used on the non-motor end models.

## Actuator Specifications

| Item | Description |
|---|---|
| Drive System | Ball screw, ø10mm, rolled C10 |
| Positioning Repeatability | ±0.02mm |
| Lost Motion | 0.1mm or less |
| Guide | Double guide (guide rod diameter ø10mm, ball bush type) |
| Rod diameter | ø20mm |
| Non-rotating accuracy of rod | ±0.05 deg |
| Ambient operating temperature, humidity | 0 to 40°C, 85% RH or less (Non-condensing) |

## Dimensional Drawings

CAD drawings can be downloaded from the website. www.intelligentactuator.com

For Special Orders Appendix P.15

2D CAD 3D CAD

(*1) Connect the motor and encoder cables here. See page A-59 for details on cables.
(*2) After homing, the slider moves to the ME, therefore, please watch for any interference with surrounding objects.
ME : Mechanical end SE : Stroke end

### [No Brake]

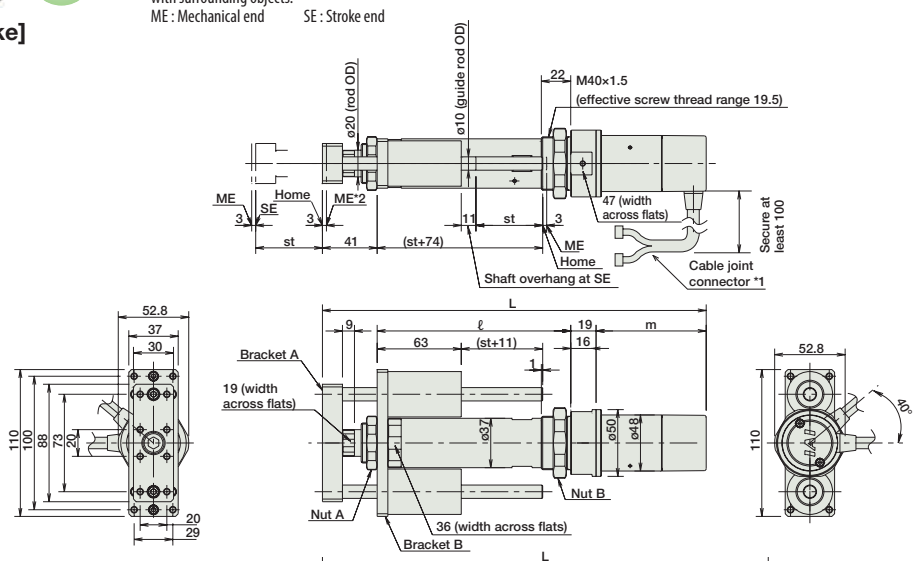


### [Brake-Equipped]

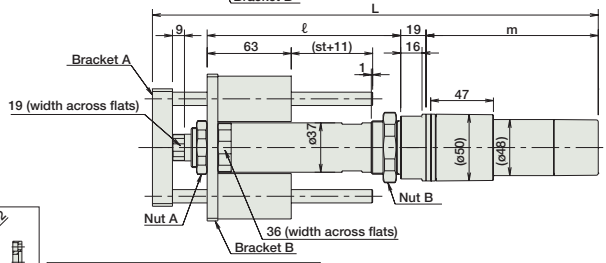


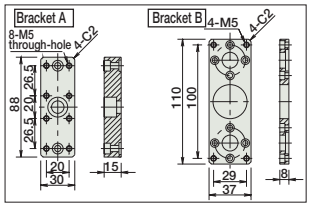


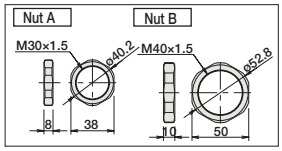


### ■ Dimensions and Weight by Stroke

**RCS2-RGD4C (without brake)**

| Stroke | | 50 | 100 | 150 | 200 | 250 | 300 |
|---|---|---|---|---|---|---|---|
| L | 20W | 285.5 | 335.5 | 385.5 | 435.5 | 485.5 | 535.5 |
| | 30W | 300.5 | 350.5 | 400.5 | 450.5 | 500.5 | 550.5 |
| ℓ | | 145 | 195 | 245 | 295 | 345 | 395 |
| m | 20W | 80.5 | | | | | |
| | 30W | 95.5 | | | | | |
| Weight (kg) | | 1.8 | 2.0 | 2.2 | 2.4 | 2.6 | 2.8 |

**RCS2-RGD4C (with brake)**

| Stroke | | 50 | 100 | 150 | 200 | 250 | 300 |
|---|---|---|---|---|---|---|---|
| L | 20W | 328.5 | 378.5 | 428.5 | 478.5 | 528.5 | 578.5 |
| | 30W | 343.5 | 393.5 | 443.5 | 493.5 | 543.5 | 593.5 |
| ℓ | | 145 | 195 | 245 | 295 | 345 | 395 |
| m | 20W | 123.5 | | | | | |
| | 30W | 138.5 | | | | | |
| Weight (kg) | | 2.0 | 2.2 | 2.4 | 2.6 | 2.8 | 3.0 |

## ③ Applicable Controllers

RCS2-series actuators can be operated with the following controllers. Select an appropriate controller type according to your application.

| Name | External view | Model number | Features | Maximum number of positioning points | Input power | Power supply capacity | Standard price | Reference page |
|---|---|---|---|---|---|---|---|---|
| Positioner mode | | SCON-CA-20Ⓘ-NP-2-Ⓘⅰ<br>SCON-CA-30DⒾ-NP-2-Ⓘⅰ | Up to 512 positioning points are supported. | 512 points | Single-phase 100VAC<br>Single-phase 200VAC<br>3-phase 200VAC (XSEL-P/Q/R/S ONLY) | 126 VA max.<br>*Power supply capacity will vary depending on the controller, so please refer to the instruction manual for details. | — | → P643 |
| Solenoid valve mode | | | Actuators can be operated through the same control used for solenoid valves. | 7 points | | | | |
| Field network type | | | Movement by numerical specification is supported. | 768 points | | | — | |
| Pulse-train input control type | | | Dedicated pulse-train input type | (—) | | | — | |
| Positioner multi-axis, network type | | MSCON-C-1-20Ⓘ-Ⓥ-0-Ⓘⅰ<br>MSCON-C-1-30DⒾ-Ⓥ-0-Ⓘⅰ | Up to 6 axes can be operated. Movement by numerical specification is supported. | 256 points | | | — | → P655 |
| Program control type, 1 to 2 axes | | SSEL-CS-1-20Ⓘ-NP-2-Ⓘⅰ<br>SSEL-CS-1-30DⒾ-NP-2-Ⓘⅰ | Program operation is supported. Up to 2 axes can be operated. | 20,000 points | | | — | → P685 |
| Program control type, 1 to 8 axes | | XSEL-Ⓘⅲ-1-20Ⓘ-N1-EEE-2-Ⓥ<br>XSEL-Ⓘⅲ-1-30DⒾ-N1-EEE-2-Ⓥ | Program operation is supported. Up to 8 axes can be operated. | Varies depending on the number of axes connected | | | — | → P695 |

* This is for the single-axis MSCON, SSEL, and XSEL.
* Ⓘⅰ indicates the power-supply voltage type (1: 100V / 2: Single-phase 200V).
* Ⓥ indicates the power-supply voltage type (1: 100 V / 2: Single-phase 200V / 3: Three-phase 200V).
* Ⓘ indicates the encoder type (I: Incremental / A: Absolute).
* Ⓘⅲ indicates the XSEL type (J / K / P / Q / R / S).
* Ⓥ indicates field network specification symbol.

Slider Type
Mini
Standard
Controllers Integrated
Rod Type
Mini
Standard
Controllers Integrated
Table/ Arm/ Flat Type
Mini
Standard
Gripper/ Rotary Type
Linear Servo Type
Clean-room Type
Splash-Proof Type
Pulse Motor
Servo Motor (24V)
Servo Motor (200V)
Linear Servo Motor

# RCS2-RGD5C

Robo Cylinder, Rod Type with Double Guide, Actuator Width 55mm, 200V Servo Motor, Coupled

**Model Specification Items**

RCS2 — RGD5C — □ — □ — □ — □ — □ — □ — □

| Series | Type | Encoder type | Motor type | Lead | Stroke | Applicable controller | Cable length | Options |
|---|---|---|---|---|---|---|---|---|
| | | I : Incremental<br>A: Absoulute | 60 : 60W Servo motor<br>100 : 100W Servo motor | 16 : 16mm<br>8 : 8mm<br>4 : 4mm | 50: 50mm<br>~<br>300: 300mm<br>(50mm pitch increments) | T1: XSEL-J/K<br>T2: SCON<br>MSCON<br>SSEL<br>XSEL-P/Q<br>XSEL-R/S | N: None<br>P: 1m<br>S: 3m<br>M: 5m<br>X□□: Custom Length<br>R□□: Robot Cable | See options below. |

* See page Pre-47 for details on the model descriptions.

CE RoHS
*CE compliance is optional.

**For High Acceleration/Deceleration** (*1)

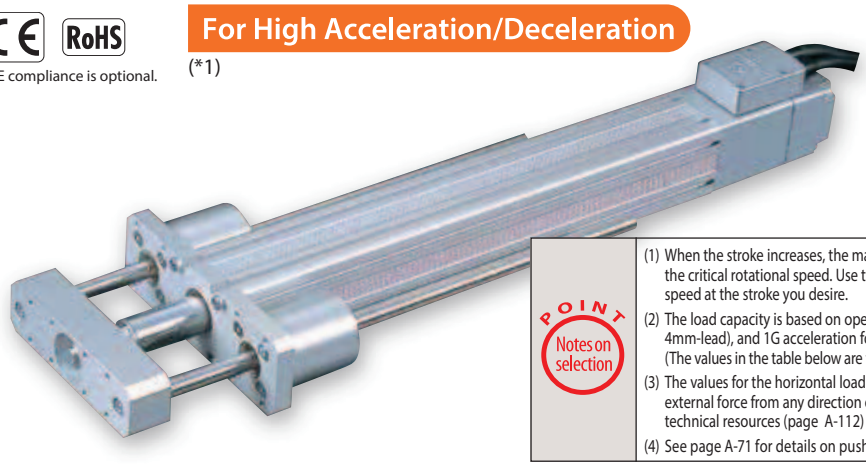

(*1) Except all 60W models and 100W 4mm lead models

Technical References — Appendix P.5

**POINT — Notes on selection**

(1) When the stroke increases, the maximum speed will drop to prevent the ball screw from reaching the critical rotational speed. Use the actuator specification table below to check the maximum speed at the stroke you desire.
(2) The load capacity is based on operating the standard and power-saving models at 0.3G (0.2G for 4mm-lead), and 1G acceleration for the high-acceleration models (4mm-lead model excluded). (The values in the table below are the upper limits, even if the acceleration/deceleration is decreased.)
(3) The values for the horizontal load capacity assume the use of an external guide, so that there is no external force from any direction other than the forward/backward direction of the rod. See the technical resources (page A-112) for the allowable weight using the supplied guide alone.
(4) See page A-71 for details on push motion.

## Actuator Specifications

### Leads and Payloads

| Model number | Motor output (W) | Lead (mm) | Max. Load Capacity Horizontal (kg) | Max. Load Capacity Vertical (kg) | Rated thrust (N) | Stroke (mm) |
|---|---|---|---|---|---|---|
| RCS2-RGD5C-①-60-16-②-③-④-⑤ | 60 | 16 | 12.0 | 1.3 | 63.8 | 50~300 (every 50mm) |
| RCS2-RGD5C-①-60-8-②-③-④-⑤ | | 8 | 25.0 | 4.3 | 127.5 | |
| RCS2-RGD5C-①-60-4-②-③-④-⑤ | | 4 | 50.0 | 10.8 | 255.1 | |
| RCS2-RGD5C-①-100-16-②-③-④-⑤ | 100 | 16 | 15.0 | 2.8 | 105.8 | |
| RCS2-RGD5C-①-100-8-②-③-④-⑤ | | 8 | 30.0 | 8.3 | 212.7 | |
| RCS2-RGD5C-①-100-4-②-③-④-⑤ | | 4 | 60.0 | 17.3 | 424.3 | |

Code explanation ① Encoder ② Stroke ③ Applicable controller ④ Cable length ⑤ Options *See page A-71 for details on push motion.

### Stroke and Maximum Speed

| Lead \ Stroke | 50~250 (every 50mm) | 300 (mm) |
|---|---|---|
| 16 | 800 | 755 |
| 8 | 400 | 377 |
| 4 | 200 | 188 |

(Unit: mm/s)

### ①Encoder Type/②Stroke

| ②Stroke (mm) | Standard price ①Encoder Type Incremental Motor Output (W) 60W | Incremental 100W | Absolute Motor Output (W) 60W | Absolute 100W |
|---|---|---|---|---|
| 50 | — | — | — | — |
| 100 | — | — | — | — |
| 150 | — | — | — | — |
| 200 | — | — | — | — |
| 250 | — | — | — | — |
| 300 | — | — | — | — |

### ④Cable Length

| Type | Cable symbol | Standard Price |
|---|---|---|
| Standard | **P** (1m) | — |
| | **S** (3m) | — |
| | **M** (5m) | — |
| Special length | **X06** (6m) ~ **X10** (10m) | — |
| | **X11** (11m) ~ **X15** (15m) | — |
| | **X16** (16m) ~ **X20** (20m) | — |
| Robot Cable | **R01** (1m) ~ **R03** (3m) | — |
| | **R04** (4m) ~ **R05** (5m) | — |
| | **R06** (6m) ~ **R10** (10m) | — |
| | **R11** (11m) ~ **R15** (15m) | — |
| | **R16** (16m) ~ **R20** (20m) | — |

* See page A-59 for cables for maintenance.

### ⑤Options

| Name | Option code | See page | Standard price |
|---|---|---|---|
| Connector cable exit direction | **A2** | → A-41 | — |
| Brake | **B** | → A-42 | — |
| CE compliance | **CE** | → A-42 | — |
| Foot bracket | **FT** | → A-49 | — |
| High acceleration/deceleration (*1) | **HA** | → A-50 | — |

(*1) The high-acceleration/deceleration option is not available for all 60W models and 100W model with 4mm lead.

### Actuator Specifications

| Item | Description |
|---|---|
| Drive System | Ball screw, ø12mm, rolled C10 |
| Positioning Repeatability | ±0.02mm |
| Lost Motion | 0.1mm or less |
| Guide | Double guide (guide rod diameter ø12mm, ball bush type) |
| Rod diameter | ø30mm |
| Non-rotating accuracy of rod | ±0.08 deg |
| Ambient operating temperature, humidity | 0 to 40°C, 85% RH or less (Non-condensing) |

## Dimensional Drawings

CAD drawings can be downloaded from the website. www.intelligentactuator.com

For Special Orders Appendix P.15

2D CAD 3D CAD

*The RGD5C is not available in non-motor end configuration, due to its construction.

(*1) Connect the motor and encoder cables here. See page A-59 for details on cables.
(*2) After homing, the slider moves to the ME, therefore, please watch for any interference with surrounding objects.
ME : Mechanical end SE : Stroke end

### [No Brake]

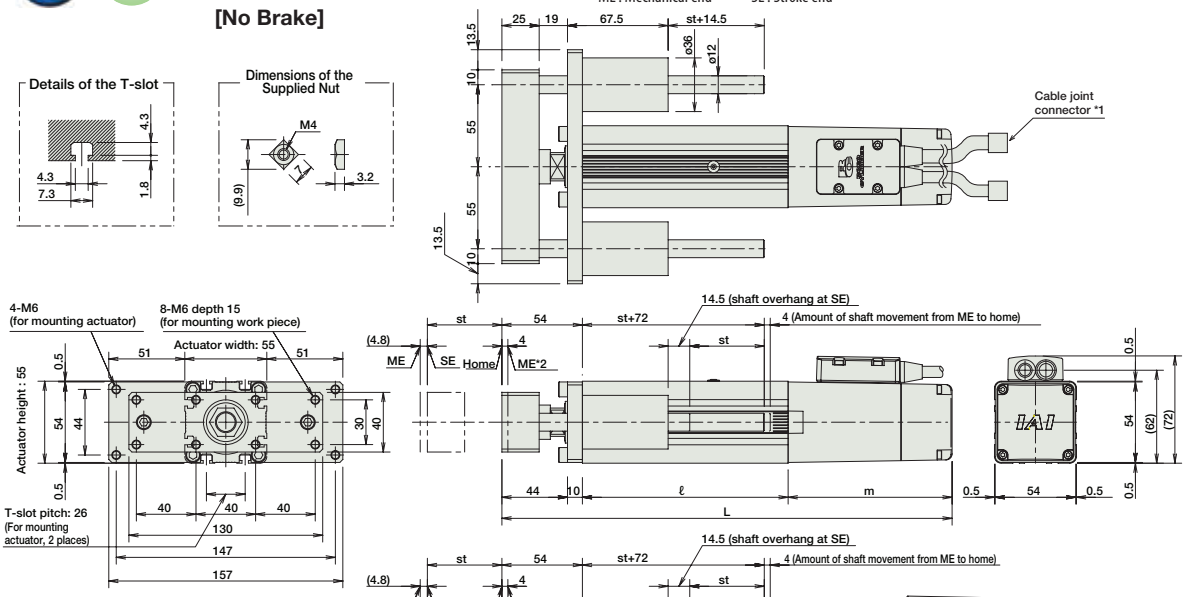


### [Brake-Equipped]

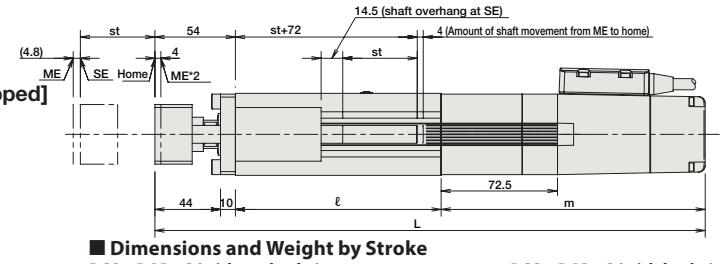


### ■ Dimensions and Weight by Stroke

**RCS2-RGD5C (without brake)**

| Stroke | | 50 | 100 | 150 | 200 | 250 | 300 |
|---|---|---|---|---|---|---|---|
| L | 60W | 284 | 334 | 384 | 434 | 484 | 524 |
| | 100W | 302 | 352 | 402 | 452 | 502 | 552 |
| ℓ | | 138 | 188 | 238 | 288 | 338 | 388 |
| m | 60W | 92 | | | | | |
| | 100W | 110 | | | | | |
| Weight (kg) | | 2.7 | 3.0 | 3.4 | 3.8 | 4.2 | 5.5 |

**RCS2-RGD5C (with brake)**

| Stroke | | 50 | 100 | 150 | 200 | 250 | 300 |
|---|---|---|---|---|---|---|---|
| L | 60W | 356.5 | 406.5 | 456.5 | 506.5 | 556.5 | 606.5 |
| | 100W | 374.5 | 424.5 | 474.5 | 524.5 | 574.5 | 624.5 |
| ℓ | | 138 | 188 | 238 | 288 | 338 | 388 |
| m | 60W | 164.5 | | | | | |
| | 100W | 182.5 | | | | | |
| Weight (kg) | | 3.0 | 3.3 | 3.7 | 4.1 | 4.5 | 5.8 |

## ③ Applicable Controllers

RCS2-series actuators can be operated with the following controllers. Select an appropriate controller type according to your application.

| Name | External view | Model number | Features | Maximum number of positioning points | Input power | Power supply capacity | Standard price | Reference page |
|---|---|---|---|---|---|---|---|---|
| Positioner mode | | SCON-CA-60Ⓘ-NP-2-Ⓘⅰ<br>SCON-CA-100Ⓘ-NP-2-Ⓘⅰ | Up to 512 positioning points are supported. | 512 points | Single-phase 100VAC<br>Single-phase 200VAC<br>3-phase 200VAC (XSEL-P/Q/R/S ONLY) | 314 VA max.<br>*Power supply capacity will vary depending on the controller, so please refer to the instruction manual for details. | — | → P643 |
| Solenoid valve mode | | | Actuators can be operated through the same control used for solenoid valves. | 7 points | | | | |
| Field network type | | | Movement by numerical specification is supported. | 768 points | | | — | |
| Pulse-train input control type | | | Dedicated pulse-train input type | (—) | | | — | |
| Positioner multi-axis, network type | | MSCON-C-1-60Ⓘ-Ⓥ-0-Ⓘⅰ<br>MSCON-C-1-100Ⓘ-Ⓥ-0-Ⓘⅰ | Up to 6 axes can be operated. Movement by numerical specification is supported. | 256 points | | | — | → P655 |
| Program control type, 1 to 2 axes | | SSEL-CS-1-60Ⓘ-NP-2-Ⓘⅰ<br>SSEL-CS-1-100Ⓘ-NP-2-Ⓘⅰ | Program operation is supported. Up to 2 axes can be operated. | 20,000 points | | | — | → P685 |
| Program control type, 1 to 8 axes | | XSEL-Ⓙⅲ-1-60Ⓘ-N1-EEE-2-Ⓥⅳ<br>XSEL-Ⓙⅲ-1-100Ⓘ-N1-EEE-2-Ⓥⅳ | Program operation is supported. Up to 8 axes can be operated. | Varies depending on the number of axes connected | | | — | → P695 |

* This is for the single-axis MSCON, SSEL, and XSEL.
* Ⓘ indicates the encoder type (I: Incremental / A: Absolute).
* Ⓘⅰ indicates the power-supply voltage type (1: 100V / 2: Single-phase 200V).
* Ⓙⅲ indicates the XSEL type (J / K / P / Q / R / S).
* Ⓥⅳ indicates the power-supply voltage type (1: 100 V / 2: Single-phase 200V / 3: Three-phase 200V).
* Ⓥ indicates field network specification symbol.

Slider Type
Mini
Standard
Controllers Integrated
Rod Type
Mini
Standard
Controllers Integrated
Table/ Arm/ Flat Type
Mini
Standard
Gripper/ Rotary Type
Linear Servo Type
Clean-room Type
Splash-Proof Type
Pulse Motor
Servo Motor (24V)
Servo Motor (200V)
Linear Servo Motor

# RCS2-RGD4D

Robo Cylinder, Rod Type with Double Guide, ø37mm Diameter, 200V Servo Motor, Built-In Model

**Model Specification Items**

RCS2 — RGD4D — □ — □ — □ — □ — □ — □ — □

| Series | Type | Encoder type | Motor type | Lead | Stroke | Applicable controller | Cable length | Options |
|---|---|---|---|---|---|---|---|---|
| | | I : Incremental<br>A: Absoulute | 20 : 20W Servo motor<br>30 : 30W Servo motor | 12 :12mm<br>6 : 6mm<br>3 : 3mm | 50: 50mm<br>~<br>300: 300mm<br>(50mm pitch increments) | T1: XSEL-J/K<br>T2: SCON<br>MSCON<br>SSEL<br>XSEL-P/Q<br>XSEL-R/S | N: None<br>P: 1m<br>S: 3m<br>M: 5m<br>X□□: Custom Length<br>R□□: Robot Cable | See options below. |

* See page Pre-47 for details on the model descriptions.

CE RoHS

*CE compliance is optional.

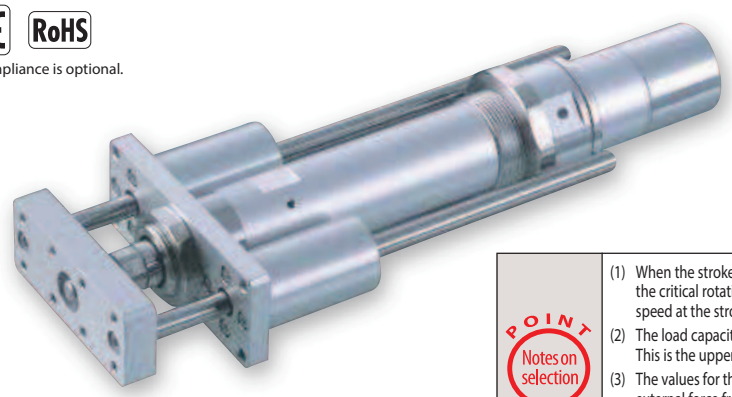

Technical References Appendix P.5

**POINT Notes on selection**

(1) When the stroke increases, the maximum speed will drop to prevent the ball screw from reaching the critical rotational speed. Use the actuator specification table below to check the maximum speed at the stroke you desire.
(2) The load capacity is based on operation at an acceleration of 0.3G (0.2G for the 3mm-lead model). This is the upper limit of the acceleration.
(3) The values for the horizontal load capacity assume the use of an external guide, so that there is no external force from any direction other than the forward/backward direction of the rod. See the technical resources (page A-112) for the allowable weight using the supplied guide alone.
(4) See page A-71 for details on push motion.

## Actuator Specifications

### Leads and Payloads

| Model number | Motor output (W) | Lead (mm) | Max. Load Capacity Horizontal (kg) | Max. Load Capacity Vertical (kg) | Rated thrust (N) | Stroke (mm) |
|---|---|---|---|---|---|---|
| RCS2-RGD4D-①-20-12-②-③-④-⑤ | 20 | 12 | 3.0 | 0.5 | 18.9 | 50~300 (every 50mm) |
| RCS2-RGD4D-①-20-6-②-③-④-⑤ | | 6 | 6.0 | 1.5 | 37.7 | |
| RCS2-RGD4D-①-20-3-②-③-④-⑤ | | 3 | 12.0 | 3.5 | 75.4 | |
| RCS2-RGD4D-①-30-12-②-③-④-⑤ | 30 | 12 | 4.0 | 1.0 | 28.3 | |
| RCS2-RGD4D-①-30-6-②-③-④-⑤ | | 6 | 9.0 | 2.5 | 56.6 | |
| RCS2-RGD4D-①-30-3-②-③-④-⑤ | | 3 | 18.0 | 6.0 | 113.1 | |

Code explanation ① Encoder ② Stroke ③ Applicable controller ④ Cable length ⑤ Options *See page A-71 for details on push motion.

### Stroke and Maximum Speed

| Lead \ Stroke | 50~300 (every 50mm) |
|---|---|
| 12 | 600 |
| 6 | 300 |
| 3 | 150 |

(Unit: mm/s)

### ①Encoder Type/②Stroke

| ②Stroke (mm) | Standard price ①Encoder Type Incremental Motor Output (W) 20W | Incremental 30W | Absolute Motor Output (W) 20W | Absolute 30W |
|---|---|---|---|---|
| 50 | — | — | — | — |
| 100 | — | — | — | — |
| 150 | — | — | — | — |
| 200 | — | — | — | — |
| 250 | — | — | — | — |
| 300 | — | — | — | — |

### ④Cable Length

| Type | Cable symbol | Standard Price |
|---|---|---|
| Standard | **P** (1m) | — |
| | **S** (3m) | — |
| | **M** (5m) | — |
| Special length | **X06** (6m) ~ **X10** (10m) | — |
| | **X11** (11m) ~ **X15** (15m) | — |
| | **X16** (16m) ~ **X20** (20m) | — |
| Robot Cable | **R01** (1m) ~ **R03** (3m) | — |
| | **R04** (4m) ~ **R05** (5m) | — |
| | **R06** (6m) ~ **R10** (10m) | — |
| | **R11** (11m) ~ **R15** (15m) | — |
| | **R16** (16m) ~ **R20** (20m) | — |

* See page A-59 for cables for maintenance.

### ⑤Options

| Name | Option code | See page | Standard price |
|---|---|---|---|
| CE compliance | **CE** | → A-42 | — |
| Foot bracket | **FT** | → A-49 | — |
| Home sensor | **HS** | → A-50 | — |
| Non-motor end specification | **NM** | → A-52 | — |
| Trunnion bracket (back) | **TRR** | → A-58 | — |

*The home sensor (HS) cannot be used on the non-motor end models.

### Actuator Specifications

| Item | Description |
|---|---|
| Drive System | Ball screw, ø10mm, rolled C10 |
| Positioning Repeatability | ±0.02mm |
| Lost Motion | 0.1mm or less |
| Guide | Double guide (guide rod diameter ø10mm, ball bush type) |
| Rod diameter | ø20mm |
| Non-rotating accuracy of rod | ±0.05 deg |
| Ambient operating temperature, humidity | 0 to 40°C, 85% RH or less (Non-condensing) |

## Dimensional Drawings

CAD drawings can be downloaded from the website. www.intelligentactuator.com

For Special Orders Appendix P.15

2D CAD

(*1) Connect the motor and encoder cables here. See page A-59 for details on cables.
(*2) After homing, the slider moves to the ME, therefore, please watch for any interference with surrounding objects.
ME : Mechanical end SE : Stroke end

### [No Brake]

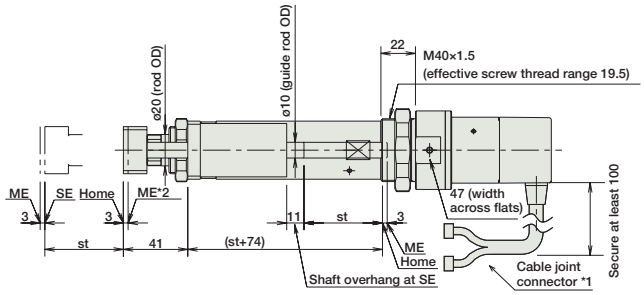


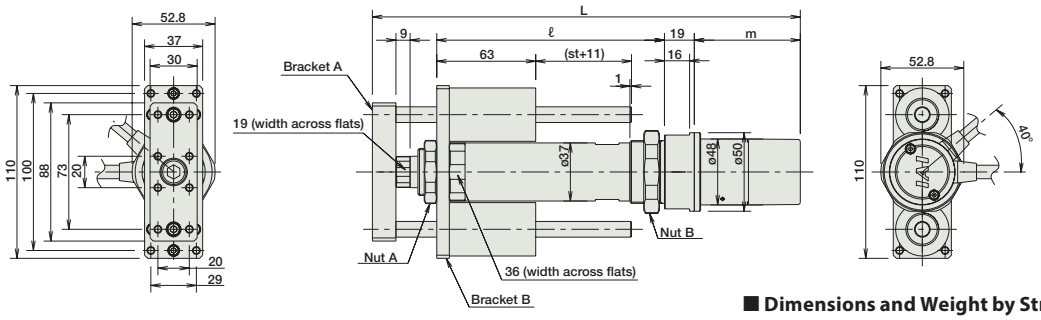


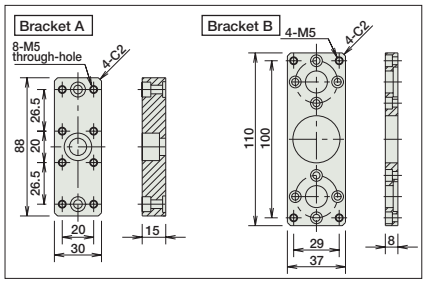


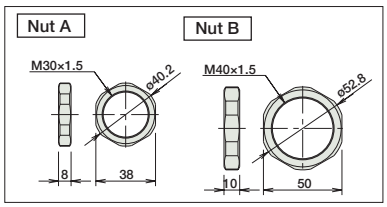


### ■ Dimensions and Weight by Stroke

**RCS2-RGD4D (without brake)**

| Stroke | | 50 | 100 | 150 | 200 | 250 | 300 |
|---|---|---|---|---|---|---|---|
| L | 20W | 263.5 | 313.5 | 363.5 | 413.5 | 463.5 | 513.5 |
| | 30W | 278.5 | 328.5 | 378.5 | 428.5 | 478.5 | 528.5 |
| ℓ | | 145 | 195 | 245 | 295 | 345 | 395 |
| m | 20W | 58.5 | | | | | |
| | 30W | 73.5 | | | | | |
| Weight (kg) | | 1.6 | 1.8 | 2.1 | 2.3 | 2.5 | 2.7 |

RCS2-RGD4D models are not equipped with a brake.

## ③ Applicable Controllers

RCS2-series actuators can be operated with the following controllers. Select an appropriate controller type according to your application.

| Name | External view | Model number | Features | Maximum number of positioning points | Input power | Power supply capacity | Standard price | Reference page |
|---|---|---|---|---|---|---|---|---|
| Positioner mode | | SCON-CA-20Ⓘ-NP-2-Ⓘⅰ<br>SCON-CA-30DⒾ-NP-2-Ⓘⅰ | Up to 512 positioning points are supported. | 512 points | Single-phase 100VAC<br>Single-phase 200VAC<br>3-phase 200VAC (XSEL-P/Q/R/S ONLY) | 126 VA max.<br>*Power supply capacity will vary depending on the controller, so please refer to the instruction manual for details. | — | → P643 |
| Solenoid valve mode | | | Actuators can be operated through the same control used for solenoid valves. | 7 points | | | | |
| Field network type | | | Movement by numerical specification is supported. | 768 points | | | — | |
| Pulse-train input control type | | | Dedicated pulse-train input type | (—) | | | — | |
| Positioner multi-axis, network type | | MSCON-C-1-20Ⓘ-Ⓥ-0-Ⓘⅰ<br>MSCON-C-1-30DⒾ-Ⓥ-0-Ⓘⅰ | Up to 6 axes can be operated. Movement by numerical specification is supported. | 256 points | | | — | → P655 |
| Program control type, 1 to 2 axes | | SSEL-CS-1-20Ⓘ-NP-2-Ⓘⅰ<br>SSEL-CS-1-30DⒾ-NP-2-Ⓘⅰ | Program operation is supported. Up to 2 axes can be operated. | 20,000 points | | | — | → P685 |
| Program control type, 1 to 8 axes | | XSEL-Ⓘⅲ-1-20Ⓘ-N1-EEE-2-Ⓥ<br>XSEL-Ⓘⅲ-1-30DⒾ-N1-EEE-2-Ⓥ | Program operation is supported. Up to 8 axes can be operated. | Varies depending on the number of axes connected | | | — | → P695 |

* This is for the single-axis MSCON, SSEL, and XSEL.
* Ⓘⅰ indicates the power-supply voltage type (1: 100V / 2: Single-phase 200V).
* Ⓥ indicates the power-supply voltage type (1: 100 V / 2: Single-phase 200V / 3: Three-phase 200V).
* Ⓘ indicates the encoder type (I: Incremental / A: Absolute).
* Ⓘⅲ indicates the XSEL type (J / K / P / Q / R / S).
* Ⓥ indicates field network specification symbol.

Slider Type
Mini
Standard
Controllers Integrated
Rod Type
Mini
Standard
Controllers Integrated
Table/ Arm/ Flat Type
Mini
Standard
Gripper/ Rotary Type
Linear Servo Type
Clean-room Type
Splash-Proof Type
Pulse Motor
Servo Motor (24V)
Servo Motor (200V)
Linear Servo Motor

# RCS2-SRGD7BD

Robo Cylinder, Rod Type with Double Guide, Actuator Width 75mm, 200V Servo Motor, Short-Length Model

**Model Specification Items**

| RCS2 | SRGD7BD | I | ☐ | ☐ | ☐ | ☐ | ☐ | ☐ | ☐ |
|---|---|---|---|---|---|---|---|---|---|
| Series | Type | Encoder type | Motor type | Lead | Stroke | Applicable controller | Cable length | Options |
| | | I : Incremental | 60 : 60W Servo motor<br>100 : 100W Servo motor<br>150 : 150W Servo motor | 16 : 16mm<br>8 : 8mm<br>4 : 4mm | 50: 50mm<br>~<br>300: 300mm<br>(50mm pitch increments) | T1: XSEL-J/K<br>T2: SCON<br>SSEL<br>XSEL-P/Q | N: None<br>P: 1m<br>S: 3m<br>M: 5m<br>X□□: Custom Length<br>R□□: Robot Cable | See options below. |

* See page Pre-47 for details on the model descriptions.

RoHS

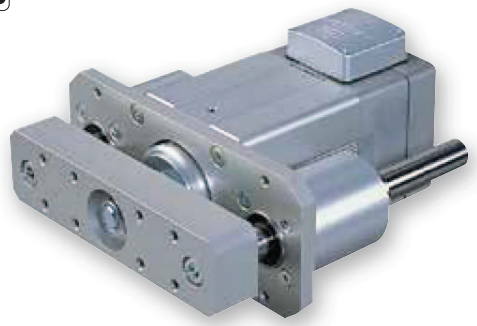

Technical References Appendix P.5

**POINT** Notes on selection

(1) When operated at the rated acceleration, the maximum load capacity is the load capacity at the rated acceleration.
(2) When operated at the maximum acceleration, the maximum load capacity is the load capacity at the maximum acceleration.
(3) The values for the horizontal load capacity assume the use of an external guide, so that there is no external force from any direction other than the forward/backward direction of the rod. See the technical resources (page A-112) for the allowable weight using the supplied guide alone.
(4) See page A-71 for details on push motion.

## Actuator Specifications

### Leads and Payloads

| Model number | Motor output (W) | Lead (mm) | Rated Acceleration (G) | Load Capacity at Rated Acceleration Horizontal (kg) | Load Capacity at Rated Acceleration Vertical (kg) | Max Acceleration (G) | Load Capacity at Max. Acceleration Horizontal (kg) | Load Capacity at Max. Acceleration Vertical (kg) | Rated thrust (N) | Stroke (mm) |
|---|---|---|---|---|---|---|---|---|---|---|
| RCS2-SRGD7BD-I-60-16-①-②-③-④ | 60 | 16 | 0.25 | 5 | 1 | 0.35 | 2.5 | (N/A) | 63 | 50~300 (every 50mm) |
| RCS2-SRGD7BD-I-60-8-①-②-③-④ | | 8 | 0.15 | 10 | 4 | 0.25 | 5 | 1.5 | 127 | |
| RCS2-SRGD7BD-I-60-4-①-②-③-④ | | 4 | 0.05 | 20 | 9 | 0.15 | 10 | 4 | 254 | |
| RCS2-SRGD7BD-I-100-16-①-②-③-④ | 100 | 16 | 0.3 | 10 | 2.5 | 0.4 | 5 | 0.5 | 103 | |
| RCS2-SRGD7BD-I-100-8-①-②-③-④ | | 8 | 0.2 | 22 | 8 | 0.3 | 10 | 3.5 | 207 | |
| RCS2-SRGD7BD-I-100-4-①-②-③-④ | | 4 | 0.1 | 40 | 18.5 | 0.2 | 20 | 8 | 414 | |
| RCS2-SRGD7BD-I-150-16-①-②-③-④ | 150 | 16 | 0.3 | 15 | 5.5 | 0.4 | 7.5 | 2 | 157 | |
| RCS2-SRGD7BD-I-150-8-①-②-③-④ | | 8 | 0.2 | 35 | 13.5 | 0.3 | 17.5 | 6 | 314 | |
| RCS2-SRGD7BD-I-150-4-①-②-③-④ | | 4 | 0.1 | 55 | 21.5 | 0.2 | 27.5 | 10 | 628 | |

Code explanation ① Stroke ② Applicable controller ③ Cable length ④ Options *See page A-71 for details on push motion.

### Stroke and Maximum Speed

| Lead \ Stroke | 50~300 (every 50mm) |
|---|---|
| 16 | 800 |
| 8 | 400 |
| 4 | 200 |

(Unit: mm/s)

### ① Stroke

| ①Stroke (mm) | Standard price Motor Output (W) 60W | 100W | 150W |
|---|---|---|---|
| 50 | — | — | — |
| 100 | — | — | — |
| 150 | — | — | — |
| 200 | — | — | — |
| 250 | — | — | — |
| 300 | — | — | — |

### ③ Cable Length

| Type | Cable symbol | Standard Price |
|---|---|---|
| Standard | **P** (1m) | — |
| | **S** (3m) | — |
| | **M** (5m) | — |
| Special length | **X06** (6m) ~ **X10** (10m) | — |
| | **X11** (11m) ~ **X15** (15m) | — |
| | **X16** (16m) ~ **X20** (20m) | — |
| Robot Cable | **R01** (1m) ~ **R03** (3m) | — |
| | **R04** (4m) ~ **R05** (5m) | — |
| | **R06** (6m) ~ **R10** (10m) | — |
| | **R11** (11m) ~ **R15** (15m) | — |
| | **R16** (16m) ~ **R20** (20m) | — |

* See page A-59 for cables for maintenance.

### ④ Options

| Name | Option code | See page | Standard price |
|---|---|---|---|
| Connector cable exit direction | **A1~A3** | → A-41 | — |
| Brake | **B** | → A-42 | — |
| Foot bracket | **FT** | → A-49 | — |
| Guide mounting direction | **GS2~GS4** | → A-50 | — |
| Extended rod tip | **RE** | → A-54 | — |

### Actuator Specifications

| Item | Description |
|---|---|
| Drive System | Ball screw, ø12mm, rolled C10 |
| Positioning Repeatability | ±0.02mm |
| Lost Motion | 0.1mm or less |
| Guide | Double guide (guide rod diameter ø16mm, ball bush type) |
| Rod diameter | ø35mm |
| Non-rotating accuracy of rod | ±0.08 deg |
| Ambient operating temperature, humidity | 0 to 40°C, 85% RH or less (Non-condensing) |

## Dimensional Drawings

CAD drawings can be downloaded from the website. www.intelligentactuator.com

For Special Orders Appendix P.15

2D CAD

* The SRGD7BD is not available in non-motor end configuration, due to its construction.

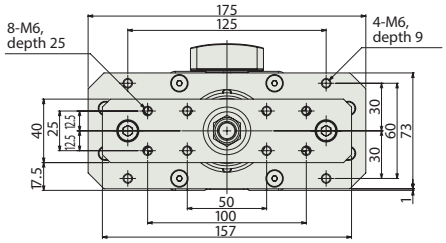


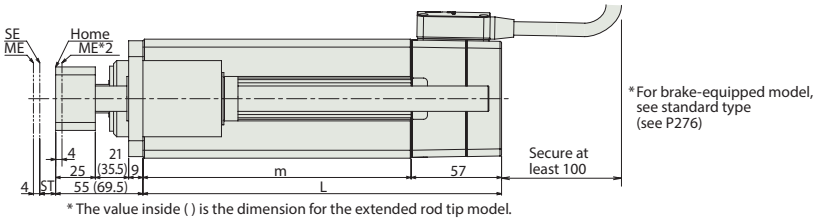


Note:
A slit is provided in the side of the actuator body to prevent pauses due to forward/backward operation.
Please make a separate request for a dustproof/splash-proof model.
Please be careful when operating in the dusty environment. The dust may enter inside from the slit.

(*1) Connect the motor and encoder cables here. See page A-59 for details on cables.
(*2) After homing, the slider moves to the ME, therefore, please watch for any interference with surrounding objects.
ST: Stroke
SE : Stroke end
ME : Mechanical end

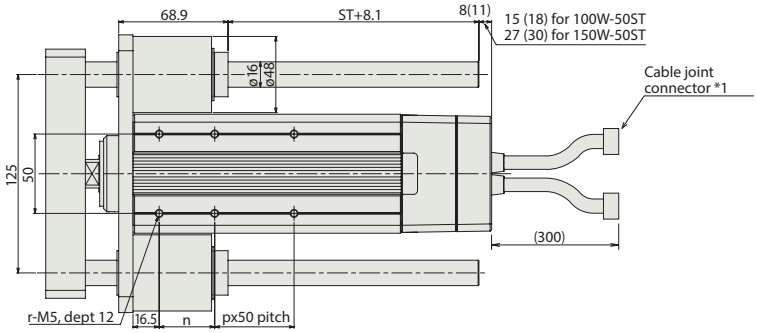


### Dimensions and Weight by Stroke

| Stroke | | 50 | 100 | 150 | 200 | 250 | 300 |
|---|---|---|---|---|---|---|---|
| L | 60W | 126 | 176 | 226 | 276 | 326 | 376 |
| | 100W | 133 | 176 | 226 | 276 | 326 | 376 |
| | 150W | 145 | 176 | 226 | 276 | 326 | 376 |
| m | 60W | 69 | 119 | 169 | 219 | 269 | 319 |
| | 100W | 76 | 119 | 169 | 219 | 269 | 319 |
| | 150W | 88 | 119 | 169 | 219 | 269 | 319 |
| n | | 25 | 35 | 35 | 35 | 35 | 35 |
| p | | 0 | 0 | 1 | 2 | 3 | 4 |
| r | | 4 | 4 | 6 | 8 | 10 | 12 |
| Weight (kg) | 60W | 4.3 | 5 | 5.7 | 6.4 | 7.2 | 7.9 |
| | 100W | 4.5 | 5.1 | 5.9 | 6.6 | 7.3 | 8 |
| | 150W | 4.8 | 5.3 | 6.1 | 6.8 | 7.5 | 8.2 |

## ②Applicable Controllers

RCS2 series actuators can be operated with the controllers indicated below. Select the type according to your intended application.

| Name | External view | Model number | Features | Maximum number of positioning points | Input power | Power-supply capacity | Standard price | Reference page |
|---|---|---|---|---|---|---|---|---|
| Positioner mode | | SCON-CA-ⓘI-NP-2-ⅱ | Up to 512 positioning points are supported. | 512 points | Single-phase 100VAC<br>Single-phase 200VAC<br>3-phase 200VAC (XSEL-P/Q only) | 408 VA max.<br>* Varies depending on the controller. Refer to the operation manual for details. | — | → P643 |
| Solenoid valve mode | | | Actuators can be operated through the same control used for solenoid valves. | 7 points | | | | |
| Field network type | | | Movement by numerical specification is supported. | 768 points | | | | |
| Pulse-train input control type | | | Dedicated pulse-train input type | (—) | | | — | |
| Program control type 1 or 2 axes | | SSEL-CS-1-ⓘI-NP-2-ⅱ | Program operation is supported<br>Up to two axes can be operated | 20,000 points | | | — | → P685 |
| Program control type 1 or 6 axes | | XSEL-ⅲ-1-ⓘI-N1-EEE-2-ⅳ | Program operation is supported<br>Up to six axes can be operated | 20,000 points | | | — | → P695 |

* This is for the single-axis SSEL, and XSEL.
* ⅱ Indicates the power-supply voltage type (1: 100 V / 2: Single-phase 200 V).
* ⅳ Indicates the power-supply voltage type (1: 100 V / 2: Single-phase 200 V / 3: Three-phase 200 V).
* ⓘ Indicates the wattage (60/100/150).
* ⅲ Indicates the XSEL type (J / K / P / Q ).

Please note that this model cannot be connected to the XSEL-P/Q type (5-axis/6-axis), XSEL-R/S type, or MSCON.

Slider Type
Mini
Standard
Controllers Integrated
Rod Type
Mini
Standard
Controllers Integrated
Table/ Arm/ Flat Type
Mini
Standard
Gripper/ Rotary Type
Linear Servo Type
Clean-room Type
Splash-Proof Type
Pulse Motor
Servo Motor (24V)
Servo Motor (200V)
Linear Servo Motor

# RCS2-RGD4R

Robo Cylinder, Rod Type with Double Guide, ø37mm Diameter, 200V Servo Motor, Side-mounted Motor

**Model Specification Items**

RCS2 — RGD4R — ☐ — ☐ — ☐ — ☐ — ☐ — ☐ — ☐

| Series | Type | Encoder type | Motor type | Lead | Stroke | Applicable controller | Cable length | Options |
|---|---|---|---|---|---|---|---|---|
| | | I : Incremental<br>A: Absoulute | 20 : 20W Servo motor<br>30 : 30W Servo motor | 12 :12mm<br>6 : 6mm<br>3 : 3mm | 50: 50mm<br>~<br>300: 300mm<br>(50mm pitch increments) | T1: XSEL-J/K<br>T2: SCON<br>MSCON<br>SSEL<br>XSEL-P/Q<br>XSEL-R/S | N: None<br>P: 1m<br>S: 3m<br>M: 5m<br>X□□: Custom Length<br>R□□: Robot Cable | See options below. |

* See page Pre-47 for details on the model descriptions.

CE RoHS

*CE compliance is optional.

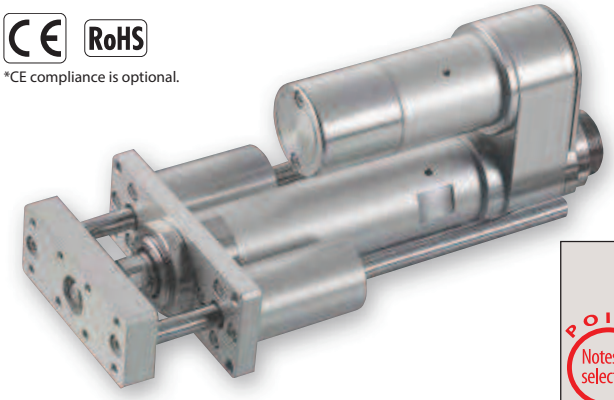

Technical References — Appendix P.5

**POINT — Notes on selection**

(1) When the stroke increases, the maximum speed will drop to prevent the ball screw from reaching the critical rotational speed. Use the actuator specification table below to check the maximum speed at the stroke you desire.

(2) The load capacity is based on operation at an acceleration of 0.3G (0.2G for the 3mm-lead model). This is the upper limit of the acceleration.

(3) The values for the horizontal load capacity assume the use of an external guide, so that there is no external force from any direction other than the forward/backward direction of the rod. See the technical resources (page A-112) for the allowable weight using the supplied guide alone.

(4) See page A-71 for details on push motion.

## Actuator Specifications

### Leads and Payloads

| Model number | Motor output (W) | Lead (mm) | Max. Load Capacity Horizontal (kg) | Max. Load Capacity Vertical (kg) | Rated thrust (N) | Stroke (mm) |
|---|---|---|---|---|---|---|
| RCS2-RGD4R-①-20-12-②-③-④-⑤ | 20 | 12 | 3.0 | 0.5 | 18.9 | 50~300 (every 50mm) |
| RCS2-RGD4R-①-20-6-②-③-④-⑤ | | 6 | 6.0 | 1.5 | 37.7 | |
| RCS2-RGD4R-①-20-3-②-③-④-⑤ | | 3 | 12.0 | 3.5 | 75.4 | |
| RCS2-RGD4R-①-30-12-②-③-④-⑤ | 30 | 12 | 4.0 | 1.0 | 28.3 | |
| RCS2-RGD4R-①-30-6-②-③-④-⑤ | | 6 | 9.0 | 2.5 | 56.6 | |
| RCS2-RGD4R-①-30-3-②-③-④-⑤ | | 3 | 18.0 | 6.0 | 113.1 | |

Code explanation ① Encoder ② Stroke ③ Applicable controller ④ Cable length ⑤ Options *See page A-71 for details on push motion.

### Stroke and Maximum Speed

| Lead \ Stroke | 50~300 (every 50mm) |
|---|---|
| 12 | 600 |
| 6 | 300 |
| 3 | 150 |

(Unit: mm/s)

### ①Encoder Type/②Stroke

| ②Stroke (mm) | Standard price ①Encoder Type Incremental Motor Output (W) 20W | Incremental 30W | Absolute Motor Output (W) 20W | Absolute 30W |
|---|---|---|---|---|
| 50 | — | — | — | — |
| 100 | — | — | — | — |
| 150 | — | — | — | — |
| 200 | — | — | — | — |
| 250 | — | — | — | — |
| 300 | — | — | — | — |

### ④Cable Length

| Type | Cable symbol | Standard Price |
|---|---|---|
| Standard | **P** (1m) | — |
| | **S** (3m) | — |
| | **M** (5m) | — |
| Special length | **X06** (6m) ~ **X10** (10m) | — |
| | **X11** (11m) ~ **X15** (15m) | — |
| | **X16** (16m) ~ **X20** (20m) | — |
| Robot Cable | **R01** (1m) ~ **R03** (3m) | — |
| | **R04** (4m) ~ **R05** (5m) | — |
| | **R06** (6m) ~ **R10** (10m) | — |
| | **R11** (11m) ~ **R15** (15m) | — |
| | **R16** (16m) ~ **R20** (20m) | — |

* See page A-59 for cables for maintenance.

### ⑤Options

| Name | Option code | See page | Standard price |
|---|---|---|---|
| Brake | **B** | → A-42 | — |
| CE compliance | **CE** | → A-42 | — |
| Foot bracket | **FT** | → A-49 | — |
| Flange bracket (back) | **FLR** | → A-46 | — |
| Home sensor | **HS** | → A-50 | — |
| Non-motor end specification | **NM** | → A-52 | — |
| Clevis bracket | **QR** | → A-53 | — |
| Back-mounting plate | **RP** | → A-54 | — |

*The home sensor (HS) cannot be used on the non-motor end models.

### Actuator Specifications

| Item | Description |
|---|---|
| Drive System | Ball screw, ø10mm, rolled C10 |
| Positioning Repeatability | ±0.02mm |
| Lost Motion | 0.1mm or less |
| Base | Material: Aluminum, white alumite treated |
| Rod diameter | ø20mm |
| Non-rotating accuracy of rod | ±0.05 deg |
| Ambient operating temperature, humidity | 0 to 40°C, 85% RH or less (Non-condensing) |

## Dimensional Drawings

CAD drawings can be downloaded from the website. www.intelligentactuator.com

For Special Orders Appendix P.15

2D CAD 3D CAD

### [No Brake]

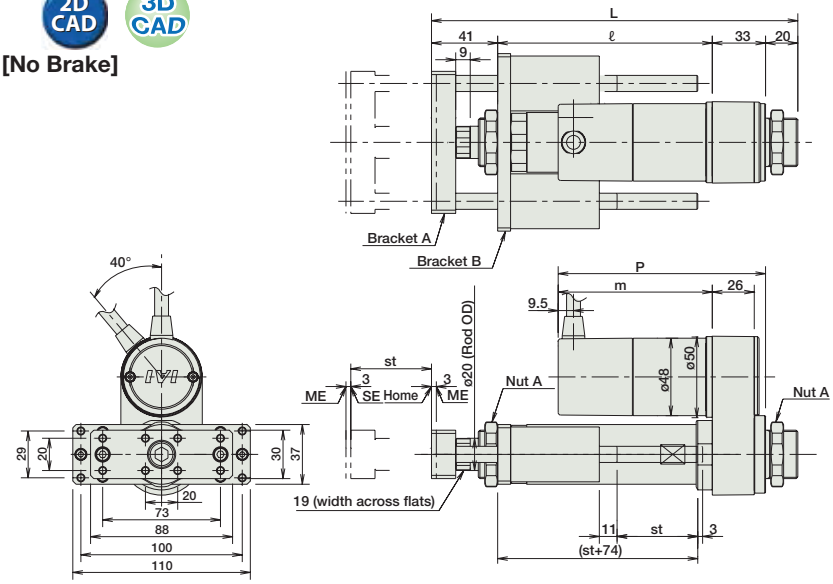


(*1) Connect the motor and encoder cables here. See page A-59 for details on cables.
(*2) After homing, the slider moves to the ME, therefore, please watch for any interference with surrounding objects.
ME : Mechanical end SE : Stroke end
(*3) The orientation of the bolt varies depending on the product.

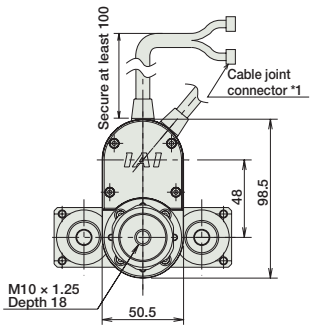


### [Brake-Equipped]

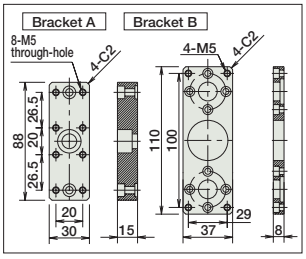


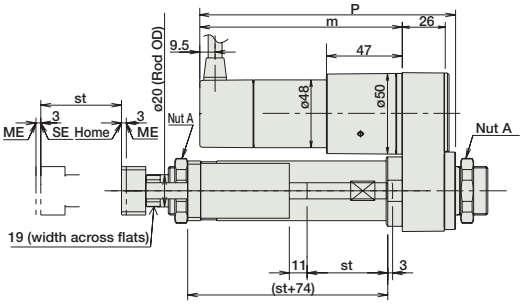


### ■ Dimensions and Weight by Stroke

**RCS2-RGD4R (without brake)**

| Stroke | | 50 | 100 | 150 | 200 | 250 | 300 |
|---|---|---|---|---|---|---|---|
| L | 20W | 227 | 277 | 327 | 377 | 427 | 477 |
| | 30W | 227 | 277 | 327 | 377 | 427 | 477 |
| ℓ | | 133 | 183 | 233 | 283 | 333 | 383 |
| m | 20W | 80.5 | | | | | |
| | 30W | 95.5 | | | | | |
| P | 20W | 113.5 | | | | | |
| | 30W | 128.5 | | | | | |
| Weight (kg) | | 1.9 | 2.2 | 2.3 | 2.6 | 2.7 | 3.0 |

**RCS2-RGD4R (with brake)**

| Stroke | | 50 | 100 | 150 | 200 | 250 | 300 |
|---|---|---|---|---|---|---|---|
| L | 20W | 227 | 277 | 327 | 377 | 427 | 477 |
| | 30W | 227 | 277 | 327 | 377 | 427 | 477 |
| ℓ | | 133 | 183 | 233 | 283 | 333 | 383 |
| m | 20W | 123.w5 | | | | | |
| | 30W | 138.5 | | | | | |
| P | 20W | 156.5 | | | | | |
| | 30W | 171.5 | | | | | |
| Weight (kg) | | 2.1 | 2.4 | 2.5 | 2.8 | 2.9 | 3.2 |

## ③ Applicable Controllers

RCS2-series actuators can be operated with the following controllers. Select an appropriate controller type according to your application.

| Name | External view | Model number | Features | Maximum number of positioning points | Input power | Power supply capacity | Standard price | Reference page |
|---|---|---|---|---|---|---|---|---|
| Positioner mode | | SCON-CA-20Ⓘ-NP-2-Ⓘⅰ<br>SCON-CA-30DⒾ-NP-2-Ⓘⅰ | Up to 512 positioning points are supported. | 512 points | Single-phase 100VAC<br>Single-phase 200VAC<br>3-phase 200VAC (XSEL-P/Q/R/S ONLY) | 126 VA max.<br>*Power supply capacity will vary depending on the controller, so please refer to the instruction manual for details. | — | → P643 |
| Solenoid valve mode | | | Actuators can be operated through the same control used for solenoid valves. | 7 points | | | | |
| Field network type | | | Movement by numerical specification is supported. | 768 points | | | — | |
| Pulse-train input control type | | | Dedicated pulse-train input type | (—) | | | — | |
| Positioner multi-axis, network type | | MSCON-C-1-20Ⓘ-Ⓥ-0-Ⓘⅰ<br>MSCON-C-1-30DⒾ-Ⓥ-0-Ⓘⅰ | Up to 6 axes can be operated. Movement by numerical specification is supported. | 256 points | | | — | → P655 |
| Program control type, 1 to 2 axes | | SSEL-CS-1-20Ⓘ-NP-2-Ⓘⅰ<br>SSEL-CS-1-30DⒾ-NP-2-Ⓘⅰ | Program operation is supported. Up to 2 axes can be operated. | 20,000 points | | | — | → P685 |
| Program control type, 1 to 8 axes | | XSEL-Ⓘⅲ-1-20Ⓘ-N1-EEE-2-Ⓥ<br>XSEL-Ⓘⅲ-1-30DⒾ-N1-EEE-2-Ⓥ | Program operation is supported. Up to 8 axes can be operated. | Varies depending on the number of axes connected | | | — | → P695 |

* This is for the single-axis MSCON, SSEL, and XSEL.
* Ⓘⅰ indicates the power-supply voltage type (1: 100V / 2: Single-phase 200V).
* Ⓥ indicates the power-supply voltage type (1: 100 V / 2: Single-phase 200V / 3: Three-phase 200V).
* Ⓘ indicates the encoder type (I: Incremental / A: Absolute).
* Ⓘⅲ indicates the XSEL type (J / K / P / Q / R / S).
* Ⓥ indicates field network specification symbol.