Drives and automation

STÖBER

Drives and automation

One partner. All the possibilities.

STOBER has developed and produced excellent drive technology since 1934 and is active internationally with around 800 employees at 14 locations. STOBER impresses machine manufacturers in wide-ranging industries and markets around the world with tailor-made, highly efficient drive systems for demanding movements.

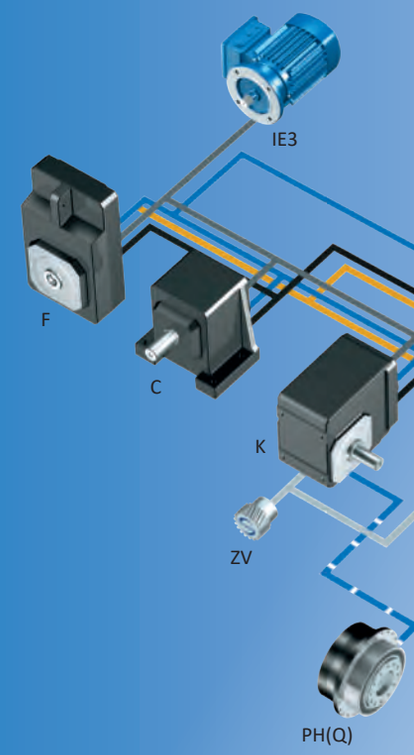

"Our vision is to be the preferred partner for perfect movement."

- Andreas Thiel, CEO of STÖBER Antriebstechnik.

Drives and automation – what you can expect!

This product catalog presents a perfectly coordinated STOBER system consisting of electronics and motors, connected via ready-to-use STOBER cable technology.

Drive controllers of the 5th and 6th drive controller generation in combination with our highly dynamic synchronous servo motors: a perfect portfolio!

At home in the world of demanding motion

Gear units

Geared motors

Motors

Cables and drive controllers

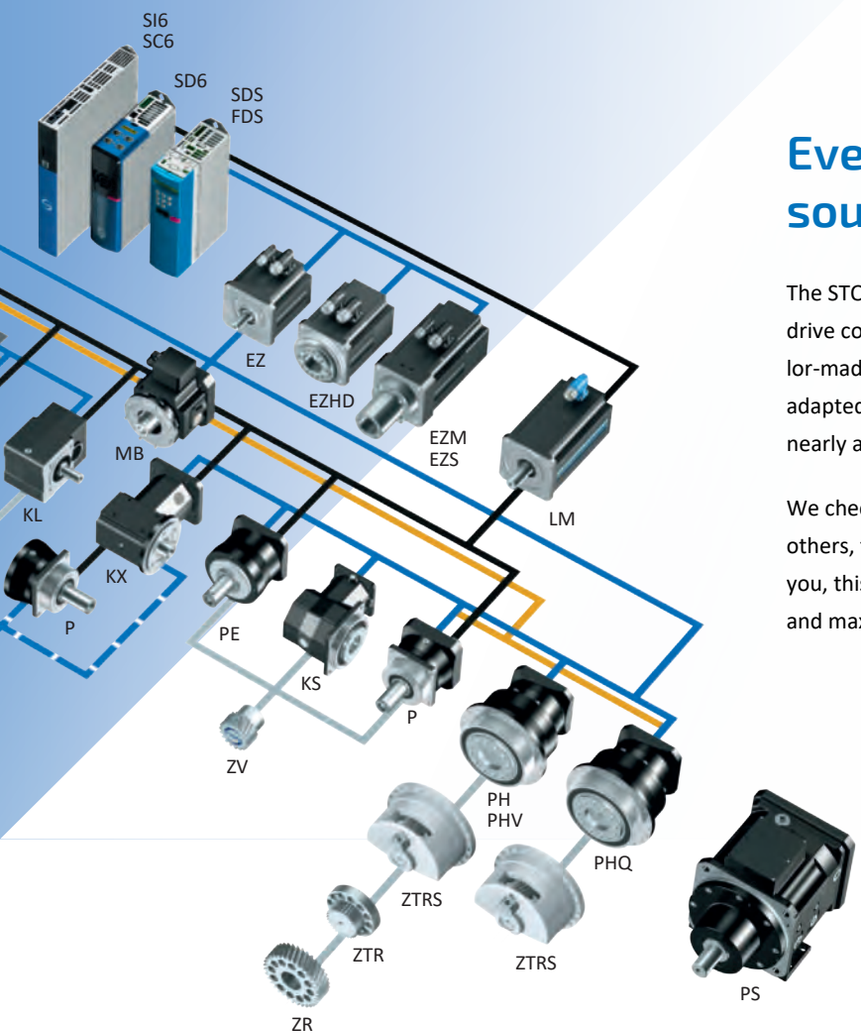

Everything from a single source.

The STOBER drive system consisting of gear units, motors, cables and drive controllers has a modular design and is freely scalable—for tailor-made, compact and powerful machine concepts. It can be adapted to your individual requirements and combined as needed in nearly all industries and applications areas.

We check every single component and how it works together with others, taking on the responsibility for the complete drive train. For you, this means that one contact partner, certified operating safety and maximum availability are guaranteed.

Need special solutions?

Numerous one-of-a-kind product highlights and project-related adjustments make it possible. With a holistic approach to your specific task, we work together on individualized solutions that are optimally coordinated to your requirements. Dedicated and solution-oriented in the support of your visions and projects.

STOBER moves integrally and precisely.

"We put ideas in motion with passion and a great deal of dedication. In the process, we rely on our decades of experience and an exceptionally broad range of products. Our customers benefit from precise, practical system solutions with uncompromising quality and expert individual consultation."

- Patrick Stöber, CEO of STÖBER Antriebstechnik.

STOBER moves as a team and with personality.

As a family-owned company, close relationships are extremely important to us. We build relationships with our employees, customers, and partners based on trust. We put people first.

We advocate for our employees' well-being, see things from our customers' perspectives, and demonstrate personal commitment to our mutual success.

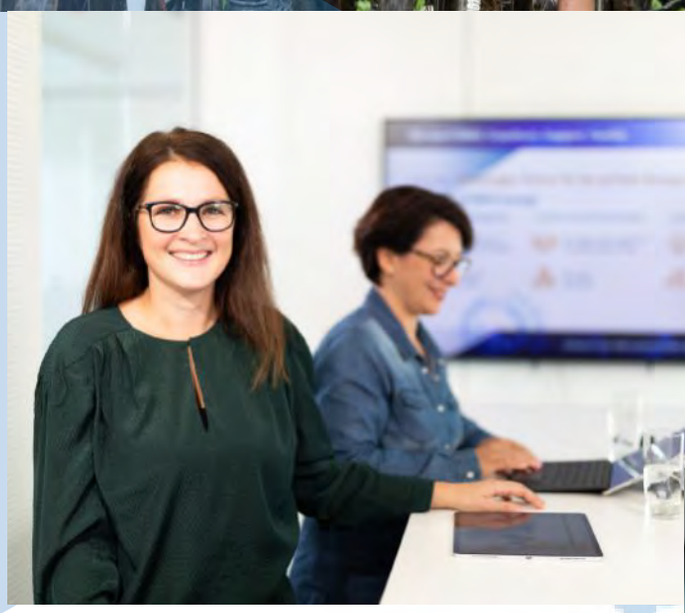

"We have installed gear units, motors and drive controllers from STOBER in nearly all our systems. STOBER supports us in new projects from the first stroke of a pencil in the design phase until commissioning. Our years of cooperation are shaped by openness and honesty and emanate a rather special spirit. The technical consulting, the support—that is real, experienced partnership"

- Jürgen Leicht, Managing Partner of Leicht Stanzautomation.

Working together. Worldwide. Successfully.

With an eye to the future, STOBER is facing the challenges of digitalization and investing in integrated solutions and a strong global production, sales and service presence. STOBER China was founded at the end of 2019. As a result, we are present in more than 40 countries around in the world with eleven subsidiaries and 80 service partners.

STOBER drives
Systems technology
Taicang, China.

Table of contents

1 Selection tool 9

2 SC6 drive controllers 19

3 SI6 Drive controllers 47

4 SD6 drive controllers 83

5 POSIDYN SDS 5000 Servo inverters 123

6 Connection method 157

7 EZ synchronous servo motors 177

8 EZHD synchronous servo motors with hollow shaft 217

9 EZM synchronous servo motors for screw drives 239

10 EZS synchronous servo motors for screw drives 263

11 Close to customers around the world 290

12 Appendix 293

1 Selection tool

1.1 Drive controllers

Product chapter	**SC6**	**SI6**	**SD6**
Chapter number	[▶ 2]	[3]	[▶ 4]
Technical data			
$I_{2N,PU}$	4.5 – 19 A	5 – 50 A	2.3 – 85 A
$I_{2N,PU}$	4 – 15 A	4.5 – 40 A	1.7 – 60 A
I_{2maxPU}	9.5 – 39.9 A	10.5 – 105 A	4.2 – 153 A
I_{2maxPU}	10 – 37.5 A	11.3 – 100 A	4.3 – 150 A

An explanation of the formula symbols can be found in the chapter [▶ 12.1].

Features

Optimal application area			
Number of axes	1 – 4	> 4	1 – 8
Application	Drive based	Controller based	Drive based synchronous operation
Motor types			
Lean motors	✓	✓	
Asynchronous motors	✓	✓	✓
Synchronous servo motors	✓	✓	✓
Linear motors			✓
Torque motors	✓	✓	✓
Encoder interfaces			
EnDat 2.1/2.2 digital	✓	✓	✓
Incremental	✓	✓	✓
SSI	✓	✓	✓
Resolver	✓	✓	(✓)
Pulse/direction signals	✓	✓	(✓)
EnDat 2.1 sin/cos			(✓)
Sin/cos			(✓)
EnDat 3 (OCS)	✓	✓	

(✓): Terminal module required

Communication			
Isochronic system bus (IGB motion bus)			✓
CANopen			(✓)
EtherCAT	✓	✓	(✓)
PROFINET	✓	✓	(✓)

(✓): Communication module required

1 Selection tool

1.1 Drive controllers

Product chapter	**SC6**	**SI6**	**SD6**		
Chapter number	[▶ 2]	[3]	[▶ 4]		
Features					
Motor temperature sensor					
PTC thermistor	✓	✓	✓		
Pt1000 temperature sensor	✓	✓	✓		
Safety functions					
STO, SS1: SIL 3, PL e (cat. 4)	(✓)	(✓)	(✓)		
SS2, SLS, SBC, SBT, SDI, SLI: SIL 3, PL e (cat. 4)			(✓)		
(✓): Safety module required					
Terminals			IO6	RI6	XI6
Digital inputs	8	8	(5)	(5)	(13)
Digital outputs	—	—	(2)	(2)	(10)
Analog inputs	—	—	(2)	(2)	(3)
Analog outputs	—	—	(2)	(2)	(2)
Expanded encoder support	—	—	—	(✓)	—
(x): Terminal module required					
Features					
Multi-axis drive system		✓			
Stand-alone	✓		✓		
One Cable Solution (OCS)	✓	✓			
Double-axis controller available	✓	✓			
Live firmware update	✓	✓	✓		
Display and keyboard			✓		
Removable data storage	✓	✓	✓		
DC link connection	✓	✓	✓		
Applications					
Torque/force mode	✓	✓	✓		
Velocity mode	✓	✓	✓		
Positioning mode	✓	✓	✓		
Master/slave mode			✓		
Interpolating mode	✓	✓	✓		
Conformity					
cULus	✓	✓	✓		
CE	✓	✓	✓		

1 Selection tool

1.1 Drive controllers

Product chapter	SDS 5000
Chapter number	[▶ 5]

Technical data

$I_{2N,PU}$	2.3 – 85 A
$I_{2N,PU}$	1.7 – 60 A
I_{2maxPU}	4.2 – 153 A
I_{2maxPU}	4.3 – 150 A

An explanation of the formula symbols can be found in the chapter [▶ 12.1].

Features

Optimal application area	
Number of axes	1 – 8
Application	Drive based synchronous operation
Motor types	
Asynchronous motors	✓
Synchronous servo motors	✓
Encoder interfaces	
EnDat 2.1/2.2 digital	✓
Incremental	✓
SSI	✓
Resolver	(✓)
Pulse/direction signals	(✓)
EnDat 2.1 sin/cos	(✓)
(✓): Terminal module required	
Communication	
Isochronic system bus (IGB motion bus)	✓
CANopen	(✓)
EtherCAT	(✓)
PROFINET	(✓)
PROFIBUS DP	(✓)
(✓): Communication module required	
Motor temperature sensor	
PTC thermistor	✓
Pt1000 temperature sensor	✓

1 Selection tool

1.1 Drive controllers

Product chapter	SDS 5000		
Chapter number	[▶ 5]		
Features			
Safety functions			
STO, SS1: SIL 3, PL e (cat. 3)	(✓)		
(✓): Safety module required			
Terminals	SEA 5001	REA 5001	XEA 5001
Digital inputs	(5)	(5)	(13)
Digital outputs	(2)	(2)	(10)
Analog inputs	(2)	(2)	(3)
Analog outputs	(2)	(2)	(2)
Expanded encoder support	—	(✓)	—
(x): Terminal module required			
Features			
Stand-alone	✓		
Live firmware update	✓		
Display and keyboard	✓		
Removable data storage	✓		
DC link connection	✓		
Applications			
Torque/force mode	✓		
Velocity mode	✓		
Positioning mode	✓		
Master/slave mode	✓		
Electronic cam disk	✓		
Conformity			
cULus	✓		
CE	✓		

Product chapter	**Cables**
Chapter number	[▷ 6]

Power cables

Design	**Motor plug connector size**			
	con.15	**con.23**	**con.40**	**con.58**
Quick lock	✓			
speedtec quick lock		✓	✓	
Screw technology		On request	On request	✓

Power cores (3 + PE)	**Brake cores**	**Temperature sensor cores**	**Cable ∅**	**Bending radius 1 (min.)**	**Bending radius 2 (min.)**
4 × 1.0 mm²	2 × 0.5 mm²	2 × 0.34 mm²	Max. 10.1 mm	101.0 mm	50.5 mm
4 × 1.5 mm²	2 × 1.0 mm²	2 × 0.5 mm²	Max. 12.2 mm	122.0 mm	61.0 mm
4 × 2.5 mm²	2 × 1.0 mm²	2 × 1.0 mm²	Max. 15.0 mm	150.0 mm	75.0 mm
4 × 4.0 mm²	2 × 1.0 mm²	2 × 0.75 mm²	Max. 16.0 mm	160.0 mm	80.0 mm
4 × 6.0 mm²	2 × 1.5 mm²	2 × 1.0 mm²	Max. 19.4 mm	194.0 mm	97.0 mm
4 × 10.0 mm²	2 × 1.5 mm²	2 × 1.0 mm²	Max. 23.5 mm	235.0 mm	117.5 mm
4 × 16.0 mm²	2 × 1.5 mm²	2 × 1.5 mm²	Max. 24.0 mm	180.0 mm	96.0 mm
4 × 25.0 mm²	2 × 1.5 mm²	2 × 1.5 mm²	Max. 27.5 mm	206.3 mm	110.0 mm

Bending radius: 1 = free to move, 2 = fixed installation

Other	
Torsional stress	± 30°/m
Bending resistance	✓
Resistant to oil and chemicals	✓

Product chapter	**Cables**
Chapter number	[▷ 6]

Encoder cables

Encoder	**Motor plug connector size**	
	con.15	**con.17**
EnDat 2.1/2.2 digital encoders	✓	✓
EnDat 2.1 sin/cos encoders	✓	✓
Resolver	✓	✓

Encoder	**Supply cores**	**Pilot cores**	**Cable ∅**	**Bending radius 1 (min.)**	**Bending radius 2 (min.)**
EnDat 2.1/2.2 digital	2 × 0.25 mm²	3 × 2 × 0.14 mm²	Max. 6.8 mm	68.0 mm	34.0 mm
Resolver	2 × 0.25 mm²	3 × 2 × 0.14 mm²	Max. 11.4 mm	114.0 mm	57.0 mm
EnDat 2.1 sin/cos	2 × 0.34 mm²	2 × 2 × 0.25 mm² + 4 × 2 × 0.14 mm²	Max. 11.0 mm	110.0 mm	55.0 mm
Bending radius: 1 = free to move, 2 = fixed installation					

Other	
Torsional stress	± 30°/m
Bending resistance	✓
Resistant to oil and chemicals	✓

Product chapter	**Cables**
Chapter number	[▷ 6]

One Cable Solution EnDat 3

Design	**Motor plug connector size**
	con.23
speedtec quick lock	✓

Power cores (3 + PE)	**Brake cores**	**Pilot cores**	**Cable ∅**	**Bending radius 1 (min.)**	**Bending radius 2 (min.)**
4 × 1.5 mm²	2 × 0.75 mm²	2 × AWG22	Max. 14.7 mm	147.0 mm	73.5 mm
4 × 2.5 mm²	2 × 0.75 mm²	2 × AWG22	Max. 16.8 mm	168.0 mm	84.0 mm

Bending radius: 1 = free to move, 2 = fixed installation

Other	
Torsional stress	± 30°/m
Bending resistance	✓
Resistant to oil and chemicals	✓

1 Selection tool

1.3 Synchronous servo motors

Product chapter	**EZ**	**EZHD**
Chapter number	[▶ 7]	[▶ 8]
Technical data		
M_N	0.89 – 77.2 Nm	1.9 – 24.6 Nm
M_0	0.95 – 94 Nm	2.6 – 31.1 Nm

An explanation of the formula symbols can be found in the chapter [▶ 12.1].

Shaft design		
Solid shaft without feather key	✓	
Flange hollow shaft		✓
Encoder		
EnDat 2.2	✓	✓
EnDat 2.1	✓	✓
EnDat 3 One Cable Solution (OCS)	✓	
Resolver	✓	
Cooling		
Convection cooling	✓	✓
Forced ventilation	✓	
Brake		
Permanent magnet holding brake	✓	✓
Marks and test symbols		
CE	✓	✓
cURus	✓	✓

1 Selection tool

1.3 Synchronous servo motors

Product chapter	**EZM**	**EZS**
Chapter number	[▶ 9]	[▶ 10]
Technical data		
F_{ax}	751 – 21375 N	760 – 31271 N

An explanation of the formula symbols can be found in the chapter [▶ 12.1].

Shaft design		
Direct drive of the threaded nut	✓	
Direct drive of the threaded spindle		✓
Encoder		
EnDat 2.2	✓	✓
EnDat 2.1	✓	✓
EnDat 3 One Cable Solution (OCS)		✓
Resolver		✓
Cooling		
Convection cooling	✓	✓
Forced ventilation		✓
Brake		
Permanent magnet holding brake	✓	✓
Marks and test symbols		
CE	✓	✓
cURus	✓	✓

2 SC6 drive controllers

Table of contents

2.1 Overview 20

2.1.1 Features 21

2.1.2 Software components 22

2.1.3 Application training 23

2.2 Technical data 23

2.2.1 Type designation 23

2.2.2 Sizes 23

2.2.3 General technical data 24

2.2.4 Electrical data 25

2.2.5 Derating 30

2.2.6 Dimensions 32

2.2.7 Weight 32

2.2.8 Minimum clearances 33

2.3 Drive controller/motor combinations 34

2.4 Accessories 37

2.4.1 Safety technology 37

2.4.2 Communication 38

2.4.3 Terminal set 38

2.4.4 DC link connection 39

2.4.5 Braking resistor 40

2.4.6 Choke 43

2.4.7 Encoder battery module 45

2.4.8 HTL-to-TTL adapter 45

2.5 Further information 46

2.5.1 Directives and standards 46

2.5.2 Symbols, marks and test symbols 46

2.5.3 Additional documentation 46

2 Drive controllers

SC6

2.1 Overview

Our more compact version for the encoderless Lean motor

Features

- Single or double-axis controller with a nominal output current up to 19 A and 250% overload capacity
- Sensorless position control of STOBER Lean motors
- Control of rotary synchronous servo motors, asynchronous motors and torque motors
- NEW: One Cable Solution EnDat 3
- Electronic motor nameplate via EnDat encoder interfaces
- Integrated EtherCAT or PROFINET communication
- STO safety technology using terminals or STO and SS1 using FSoE (Fail Safe over EtherCAT): SIL 3, PL e (cat. 4)
- Integrated brake control
- Single-ended nominal power consumption on double-axis controllers for operation of motors with different power
- Energy supply through direct power supply
- Flexible DC link connection for multi-axis applications

2.1.1 Features

The compact stand-alone SC6 drive controller allows for sensorless control of Lean motors of the LM series. These motors provide energy efficiency at the performance level of synchronous servo motors. They also guarantee high investment protection, thanks to energy efficiency class IE5 and the corresponding higher efficiency compared to IE4 asynchronous motors. However, the SC6 can also be used in combination with asynchronous motors or synchronous servo motors with encoders (e.g. the EZ series). SC6 is available in three sizes with a nominal output current of up to 19 A: Sizes 0 and 1 as a double-axis controller, size 2 as a single-axis controller.

For STOBER synchronous servo motors, we recommended operation with the EnDat 2.1/2.2 digital encoder or as a One Cable Solution with EnDat 3. These encoder systems make it possible to attain the highest control quality. It is possible to perform motor parameterization automatically from the electronic motor nameplate.

The compact SC6 for Lean motors of the LM series

As small as a paperback

You save valuable space in your control cabinet because, with a width of just 45 mm, this drive controller is the most compact solution on the market. It offers all the features that a designer requires.

Quick DC-Link

The drive controllers have the option of a DC link connection. This technology makes it possible for the regenerative production of energy from one drive to be used as motor energy by another drive. The Quick DC-Link rear structure element has been developed to set up a reliable and efficient rail connection to the DC link connection. This optionally available accessory connects the DC links of the individual drive controllers by means of copper rails that can carry a load of up to 200 A. The rails can be attached without any tools using quick fastening clamps.

Perfectly adapted combinations

SC6 drive controllers can be combined with the STOBER SI6 and SD6 series as needed. For the general energy supply, the drive controllers from the SC6, SI6 and SD6 series are connected to each other using Quick DC-Link modules.

Tailored energy usage

When using double-axis modules, the unused power reserves of one axis can be used for other axes.

Precise dynamics

The drive controller provides acceleration that is literally as fast as lightning. For example, in conjunction with the STOBER EZ401 synchronous servo motor: from 0 to 3000 rpm in 10 ms.

Fewer clicks, less wiring

The installation of the drive controller is as easy as you could imagine. There is no difficult wiring. The encoder communication and power connection of the motor takes place using a common cable connection. The EnDat 3 encoder system provides an electronic motor nameplate that takes care of the parameterization of motor data simply and safely. EnDat 2.2 digital offers an alternative interface, which also has an electronic nameplate function.

Safety functions

The safety concept of the drive controller is based on the STO (Safe Torque Off) function. The concept corresponds to SIL 3 according to DIN EN 61800-5-2 and PL e (Cat. 4) according to DIN EN ISO 13849-1. For double-axis controllers, the STO safety function has a two-channel structure that acts upon both axes. For connection to a higher-level safety circuit, different interfaces are available (terminals or FSoE).

Heavy duty

There is an extremely robust design concealed behind the elegant exterior. All components—from the stable, well-shielded sheet steel housing to the motor connectors—far exceed the set values of industry standards. The inside is also anything but small-scale: ample computer capacities, high-quality components, careful workmanship.

2.1.2 Software components

Project configuration and commissioning

The 6th generation of DriveControlSuite project configuration and commissioning software has all the functions for the efficient use of drive controllers in single-axis and multi-axis applications. The program guides you step by step through the complete project configuration and parameterization process using wizards.

Open communication

The Ethernet-based EtherCAT and PROFINET fieldbus systems are available in the drive controller.

Applications

Drive-based motion control is recommended for the decentralized motion control of sophisticated machines.

The drive-based application package from STOBER is the right choice wherever universal and flexible solutions are needed. The Drive Based application provides drive-based motion control for positioning, velocity and torque/force with the PLCopen Motion Control command set. These standard commands have been combined into operating modes for different applications and supplemented with additional functions such as motion block linking, cams and much more. For the command operating mode, all properties of the movements are specified directly by the controller. The properties of the movements in the drive are predefined in the motion block operating mode so that only a start signal is necessary to perform the movement. Linking can be used to define complete motion sequences. There is a separate operating mode available for applications controlled by velocity or torque/force such as pumps, fans or conveyor belts. This also allows for operation without a controller.

In addition, the CiA 402 application is also available, which includes both the controller-based and drive-based operating modes (csp, csv, cst, ip, pp, pv, pt).

2.1.3 Application training

STOBER offers a multi-level training program that is essentially focused on the drive controller.

G6 Basic

Training content: System overview, installation and commissioning of the drive controller. Use of option modules. Parameterization, commissioning and diagnostics using the commissioning software. Remote maintenance. Basics of controller optimization. Configuration of the drive train. Integrated software functions. Software applications. Connection to a higher-level controller. Basics of safety technology. Practical exercises on training topics.

Software used: DriveControlSuite.

G6 Customized

Training content: Special knowledge for regulating, control and safety technology. Electronic cam disk. Practical exercises on training topics.

2.2 Technical data

Technical data for the drive controller can be found in the following chapters.

2.2.1 Type designation

SC	**6**	**A**	**0**	**6**	**2**	**Z**

Tab. 1: Example code for type designation

Code	Designation	Design
SC	Series	ServoCompact
6	Generation	Generation 6
A	Version	
0 – 2	Size	
6	Power output stage	Power output stage within the size
2 1	Axis controller	Double-axis controller Single-axis controller
Z R Y	Safety technology	SZ6: Without safety technology SR6: STO using terminals SY6: STO and SS1 using FSoE

Tab. 2: Meaning of the example code

2.2.2 Sizes

Type	ID No.	Size	Axis controller
SC6A062	56690	Size 0	Double-axis controller
SC6A162	56691	Size 1	Double-axis controller
SC6A261	56692	Size 2	Single-axis controller

Tab. 3: Available SC6 types and sizes

SC6 in sizes 0 to 2

Note that the basic device is delivered without terminals. Suitable terminal sets are available separately for each size.

2.2.3 General technical data

The following information applies to all device types.

Device features	
Protection class of the device	IP20
Protection class of the installation space	At least IP54
Protection class	Protection class I in accordance with DIN EN 61140
Radio interference suppression	Integrated line filter in accordance with DIN EN 61800-3, interference emission class C3
Overvoltage category	III in accordance with DIN EN 61800-5-1
Test symbols	CE, cULus LISTED, EAC

Tab. 4: Device features

Transport and storage conditions	
Storage/ transport temperature	−20 °C to +70 °C Maximum change: 20 K/h
Relative humidity	Maximum relative humidity 85%, non-condensing
Vibration (transport) in accordance with DIN EN 60068-2-6	5 Hz ≤ f ≤ 9 Hz: 3.5 mm 9 Hz ≤ f ≤ 200 Hz: 10 m/s² 200 Hz ≤ f ≤ 500 Hz: 15 m/s²
Fall height for freefall[1] Weight < 100 kg in accordance with DIN EN 61800-2 (or DIN EN 60721-3-2:1997, class 2M1)	0.25 m

Tab. 5: Transport and storage conditions

[1] Only valid for components in original packaging

Operating conditions	
Surrounding temperature during operation	0 °C to 45 °C with nominal data 45 °C to 55 °C with derating −2.5% / K
Relative humidity	Maximum relative humidity 85%, non-condensing
Installation altitude	0 m to 1000 m above sea level without restrictions 1000 m to 2000 m above sea level with −1.5%/100 m derating
Pollution degree	Pollution degree 2 in accordance with EN 50178
Ventilation	Installed fan
Vibration (operation) in accordance with DIN EN 60068-2-6	5 Hz ≤ f ≤ 9 Hz: 0.35 mm 9 Hz ≤ f ≤ 200 Hz: 1 m/s²

Tab. 6: Operating conditions

Discharge times	
Self-discharge of DC link	15 min

Tab. 7: Discharge times of the DC link circuit

2.2.4 Electrical data

The electrical data of the available SC6 sizes as well as the properties of the brake chopper can be found in the following sections.

Information

For the time span between energizing two devices, note that:

a) Direct, repeat activation of the supply voltage is possible for cyclical power-on/power-off operation.

b) A time span of > 15 minutes must be observed between two energizing processes during continuous, cyclical power-on/power-off operation with increased charging capacity.

Information

The STO safety function is available for safe stopping as an alternative to continuous, cyclical power-on/power-off operation.

An explanation of the symbols used for formulas can be found in Chapter [▸ 12.1].

2.2.4.1 Control unit

Electrical data	All types
U_{1CU}	24 V_{DC}, +20%/−15%
I_{1maxCU}	0.5 A

Tab. 8: Control unit electrical data

2.2.4.2 Power unit: Size 0

Electrical data	SC6A062
U_{1PU}	3 × 400 V_{AC}, +32% / −50%, 50/60 Hz; 3 × 480 V_{AC}, +10% / −58%, 50/60 Hz
f_{2PU}	0 – 700 Hz
U_{2PU}	0 – max. U_{1PU}
C_{PU}	270 µF
$C_{N,PU}$	1400 µF
C_{maxPU}	1880 µF

Tab. 9: SC6 electrical data, size 0

The charging capacity depends on the time between two energizing processes:

Information

For the maximum charging capacity C_{maxPU}, a time span of ≥ 15 min must be maintained between two energizing processes.

Nominal currents up to +45 °C (in the control cabinet)

Electrical data	SC6A062
$f_{PWM,PU}$	4 kHz
$I_{1N,PU}$	10 A
$I_{2N,PU}$	2 × 4.5 A
I_{2maxPU}	210% for 2 s

Tab. 10: SC6 electrical data, size 0, for 4 kHz clock frequency

Electrical data	SC6A062
$f_{PWM,PU}$	8 kHz
$I_{1N,PU}$	8.9 A
$I_{2N,PU}$	2 × 4 A
I_{2maxPU}	250% for 2 s

Tab. 11: SC6 electrical data, size 0, for 8 kHz clock frequency

Electrical data	SC6A062
U_{onCH}	780 – 800 V_{DC}
U_{offCH}	740 – 760 V_{DC}
R_{2minRB}	100 Ω
P_{maxRB}	6.4 kW
P_{effRB}	2.9 kW

Tab. 12: Brake chopper electrical data, size 0

2.2.4.3 Power unit: Size 1

Electrical data	SC6A162
U_{1PU}	3 × 400 V_{AC}, +32% / −50%, 50/60 Hz; 3 × 480 V_{AC}, +10% / −58%, 50/60 Hz
f_{2PU}	0 – 700 Hz
U_{2PU}	0 – max. U_{1PU}
C_{PU}	940 µF
$C_{N,PU}$	1400 µF
C_{maxPU}	1880 µF

Tab. 13: SC6 electrical data, size 1

The charging capacity depends on the time between two energizing processes:

Information

For the maximum charging capacity C_{maxPU}, a time span of ≥ 15 min must be maintained between two energizing processes.

Nominal currents up to +45 °C (in the control cabinet)

Electrical data	SC6A162
$f_{PWM,PU}$	4 kHz
$I_{1N,PU}$	23.2 A
$I_{2N,PU}$	2 × 10 A
I_{2maxPU}	210% for 2 s

Tab. 14: SC6 electrical data, size 1, for 4 kHz clock frequency

Electrical data	SC6A162
$f_{PWM,PU}$	8 kHz
$I_{1N,PU}$	20.9 A
$I_{2N,PU}$	2 × 9 A
I_{2maxPU}	250% for 2 s

Tab. 15: SC6 electrical data, size 1, for 8 kHz clock frequency

Electrical data	SC6A162
U_{onCH}	780 – 800 V_{DC}
U_{offCH}	740 – 760 V_{DC}
R_{2minRB}	47 Ω
P_{maxRB}	13.6 kW
P_{effRB}	6.2 kW

Tab. 16: Brake chopper electrical data, size 1

2.2.4.4 Power unit: Size 2

Electrical data	SC6A261
U_{1PU}	3 × 400 V_{AC}, +32% / −50%, 50/60 Hz; 3 × 480 V_{AC}, +10% / −58%, 50/60 Hz
f_{2PU}	0 – 700 Hz
U_{2PU}	0 – max. U_{1PU}
C_{PU}	940 µF
$C_{N,PU}$	1400 µF
C_{maxPU}	1880 µF

Tab. 17: SC6 electrical data, size 2

The charging capacity depends on the time between two energizing processes:

Information

For the maximum charging capacity C_{maxPU}, a time span of ≥ 15 min must be maintained between two energizing processes.

Nominal currents up to +45 °C (in the control cabinet)

Electrical data	SC6A261
$f_{PWM,PU}$	4 kHz
$I_{1N,PU}$	22.6 A
$I_{2N,PU}$	19 A
I_{2maxPU}	210% for 2 s

Tab. 18: SC6 electrical data, size 2, for 4 kHz clock frequency

Electrical data	SC6A261
$f_{PWM,PU}$	8 kHz
$I_{1N,PU}$	17.9 A
$I_{2N,PU}$	15 A
I_{2maxPU}	250% for 2 s

Tab. 19: SC6 electrical data, size 2, for 8 kHz clock frequency

Electrical data	SC6A261
U_{onCH}	780 – 800 V_{DC}
U_{offCH}	740 – 760 V_{DC}
R_{2minRB}	47 Ω
P_{maxRB}	13.6 kW
P_{effRB}	6.2 kW

Tab. 20: Brake chopper electrical data, size 2

2.2.4.5 Parallel connection

The charging capacity of the driver controllers can be increased by a parallel connection only if the power grid supply is connected to all drive controllers simultaneously.

2.2.4.6 Single-ended nominal power consumption on double-axis controllers

Operating two motors on one double-axis controller makes it possible to operate one of the motors with a continuous current above the nominal current of the drive controller if the continuous current of the second connected motor is lower than the nominal current of the drive controller. This enables economical combinations of double-axis controllers and motors.

The nominal output current for axis B can be determined using the following formula if the output current for axis A is known:

Example 1

$$I_{2PU(B)} = I_{2N,PU} - \left(I_{2PU(A)} - I_{2N,PU} \right) \times \frac{3}{5} \qquad \text{where} \qquad 0 \le I_{2PU(A)} \le I_{2N,PU}$$

Example 2

$$I_{2PU(B)} = I_{2N,PU} - \left(I_{2PU(A)} - I_{2N,PU} \right) \times \frac{5}{3} \qquad \text{where} \qquad I_{2N,PU} \le I_{2PU(A)} \le 1{,}6 \times I_{2N,PU}$$

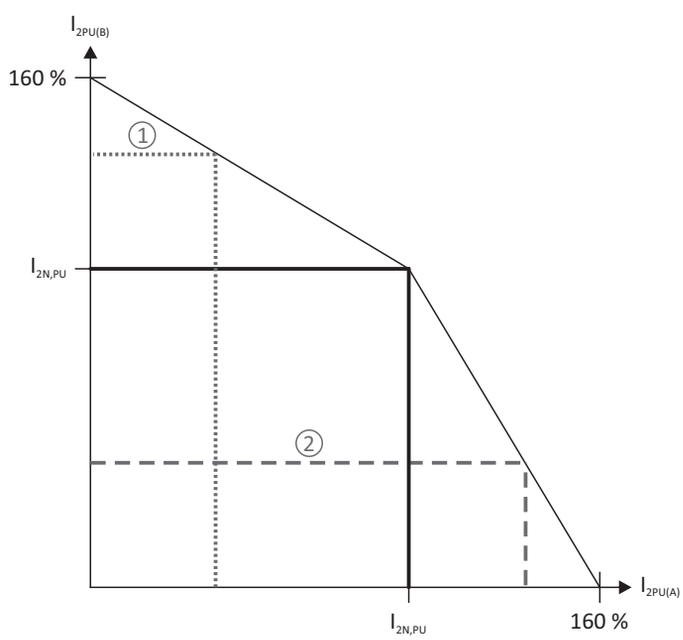

Fig. 1: Asymmetric load on double-axis controllers

Information

Note that the available maximum currents I_{2maxPU} of the axis controllers are also relative to the nominal output current $I_{2N,PU}$ for single-ended nominal power consumption.

2.2.4.7 Power loss data in accordance with EN 61800-9-2

Type	Nominal current $I_{2N,PU}$	Apparent power	Absolute losses $P_{V,CU}$[2]	Operating points[3]								IE class[4]	Comparison[5]
				(0/25)	(0/50)	(0/100)	(50/25)	(50/50)	(50/100)	(90/50)	(90/100)		
				Relative losses									
	[A]	[kVA]	[W]	[%]									
SC6A062	4.5	6.2	Max. 10	1.34	1.49	1.86	1.40	1.63	2.19	1.84	2.77	IE2	
SC6A162	10	13.9	Max. 10	0.76	0.92	1.43	0.81	1.04	1.75	1.22	2.29	IE2	
SC6A261	19	13.2	10	0.77	0.95	1.56	0.82	1.08	1.89	1.25	2.43	IE2	
				Absolute losses P_V									
	[A]	[kVA]	[W]	[W]									[%]
SC6A062	4.5	6.2	Max. 10	83.2	92.5	115.2	86.7	100.8	135.8	113.9	171.7	IE2	36.0
SC6A162	10	13.9	Max. 10	105.5	128.3	198.8	113.1	145.1	243.5	170.1	318.7	IE2	40.8
SC6A261	19	13.2	Max. 10	101.2	125.8	206.1	108.5	142.0	249.5	165.6	320.4	IE2	41.0

Tab. 21: Power loss data of the SC6 drive controller in accordance with EN 61800-9-2

General conditions

The specified losses apply to a drive controller. They apply to both axes together in the case of double-axis controllers.

The loss data applies to drive controllers without any accessories.

The power loss calculation is based on a three-phase supply voltage with 400 V_{AC}/50 Hz.

The calculated data includes a supplement of 10% in accordance with EN 61800-9-2.

The power loss specifications refer to a clock frequency of 4 kHz.

The absolute losses for a power unit that is switched off refer to the 24 V_{DC} power supply of the control electronics.

2.2.5 Derating

When dimensioning the drive controller, observe the derating of the nominal output current as a function of the clock frequency, surrounding temperature and installation altitude. There is no restriction for a surrounding temperature from 0 °C to 45 °C and an installation altitude of 0 m to 1000 m. The details given below apply to values outside these ranges.

2.2.5.1 Effect of the clock frequency

Changing the clock frequency f_{PWM} affects the amount of noise produced by the drive, among other things. However, increasing the clock frequency results in increased losses. During project configuration, define the highest clock frequency and use it to determine the nominal output current $I_{2N,PU}$ for dimensioning the drive controller.

Type	$I_{2N,PU}$ 4 kHz [A]	$I_{2N,PU}$ 8 kHz [A]	$I_{2N,PU}$ 16 kHz [A]
SC6A062	2 × 4.5	2 × 4	2 × 3
SC6A162	2 × 10	2 × 9	2 × 5
SC6A261	19	15	8

Tab. 22: Nominal output current $I_{2N,PU}$ dependent on the clock frequency

[2] Absolute losses for a power unit that is switched off

[3] Operating points for relative motor stator frequency in % and relative torque current in %

[4] IE class in accordance with EN 61800-9-2

[5] Comparison of the losses for the reference related to IE2 in the nominal point (90, 100)

2.2.5.2 Effect of the surrounding temperature

Derating as a function of the surrounding temperature is determined as follows:

- 0 °C to 45 °C: No restrictions (D_T = 100%)
- 45 °C to 55 °C: Derating −2.5%/K

Example

The drive controller needs to be operated at 50 °C.

The derating factor D_T is calculated as follows
D_T= 100% − 5 × 2.5% = 87.5%

2.2.5.3 Effect of the installation altitude

Derating as a function of the installation altitude is determined as follows:

- 0 m to 1000 m: No restriction (D_{IA} = 100%)
- 1000 m to 2000 m: Derating −1.5%/100 m

Example

The drive controller needs to be installed at an altitude of 1500 m above sea level.

The derating factor D_{IA} is calculated as follows:
D_{IA} = 100% − 5 × 1.5% = 92.5%

2.2.5.4 Calculating the derating

Follow these steps for the calculation:

1. Determine the highest clock frequency (f_{PWM}) that will be used during operation and use it to determine the nominal current $I_{2N,PU}$.
2. Determine the derating factors for installation altitude and surrounding temperature.
3. Calculate the reduced nominal current $I_{2N,PU(red)}$ in accordance with the following formula:
   $I_{2N,PU(red)} = I_{2N,PU} \times D_T \times D_{IA}$

Example

A drive controller of type SC6A062 needs to be operated at a clock frequency of 8 kHz at an altitude of 1500 m above sea level and a surrounding temperature of 50 °C.

The nominal current of the SC6A062 at 8 kHz is 4 A per axis. The derating factor D_T is calculated as follows:
D_T = 100% − 5 × 2.5% = 87.5%

The derating factor D_{IA} is calculated as follows:
D_{IA} = 100% − 5 × 1.5% = 92.5%

The output current of importance for the project configuration is:
$I_{2N,PU(red)}$ = 4 A × 0.875 × 0.925 = 3.24 A

2.2.6 Dimensions

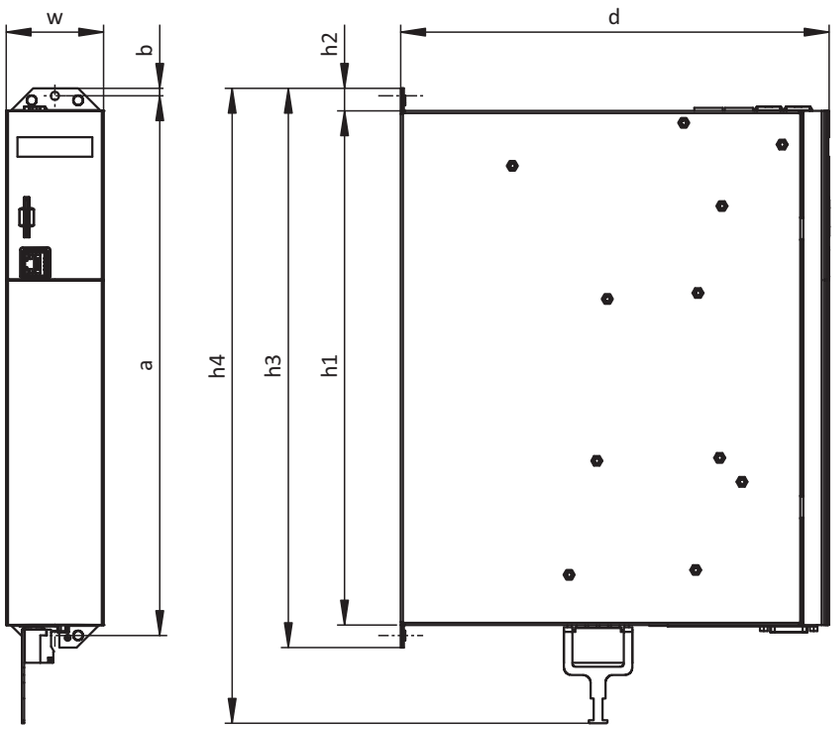

Fig. 2: SC6 dimensional drawing

Dimension			Size 0	Size 1	Size 2
Drive controller	Width	w	45	65	
	Depth	d	265	286	
	Body height	h1	343		
	Fastening clip height	h2	15		
	Height incl. fastening clips	h3	373		
	Total height incl. shield connection	h4	423		
Fastening holes (M5)	Vertical distance	a	360+2		
	Vertical distance to the upper edge	b	5		

Tab. 23: SC6 dimensions [mm]

2.2.7 Weight

Type	Weight without packaging [g]	Weight with packaging [g]
SC6A062	3600	5200
SC6A162	5300	6700
SC6A261	5200	6400

Tab. 24: SC6 weight [g]

2.2.8 Minimum clearances

Drive controller

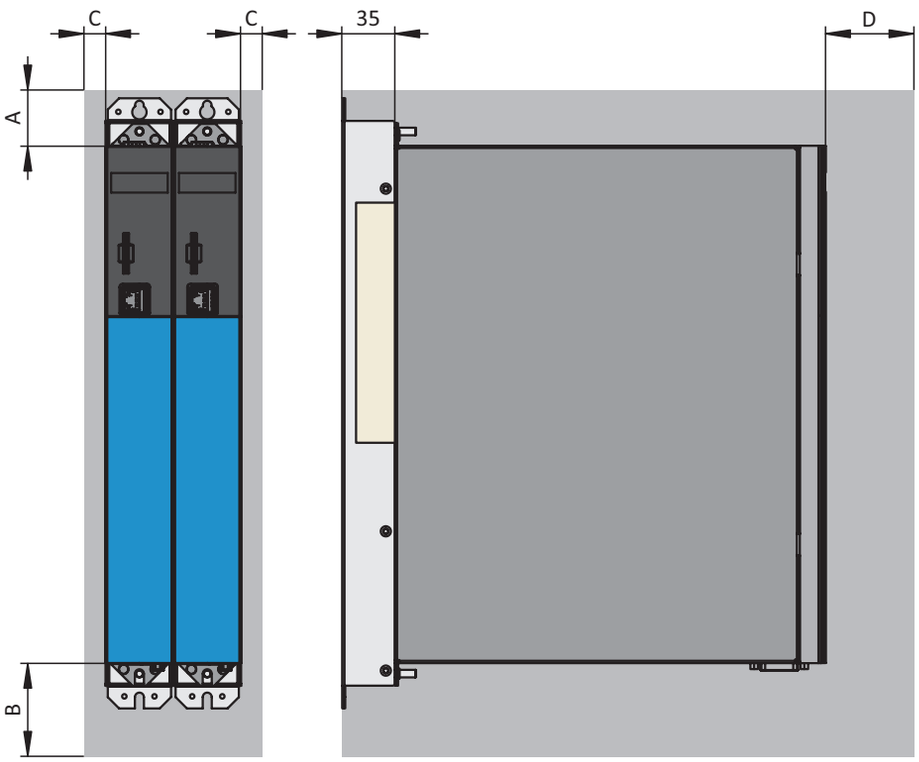

Fig. 3: Minimum clearances

The specified dimensions relate to the outer edges of the drive controller.

Minimum clearance	A (above)	B (below)	C (on the side)	D (in front)
All sizes	100	200	5	50[6]

Tab. 25: Minimum clearances [mm]

Chokes and filters

Avoid installation below drive controllers or supply modules. For installation in a control cabinet, a distance of approximately 100 mm to other neighboring components is recommended. This distance ensures proper heat dissipation for chokes and filters.

Braking resistors

Avoid installation below drive controllers or supply modules. In order for heated air to flow out unimpeded, a minimum clearance of approximately 200 mm must be maintained in relation to neighboring components or walls and approximately 300 mm must be maintained to components above or ceilings.

[6] Minimum clearance to be taken into account for permanent connection of the X9 service interface

2.3 Drive controller/motor combinations

An explanation of the symbols used for formulas can be found in Chapter [▸ 12.1].

EZ synchronous servo motor (n_N = 3000 rpm) – SC6

						SC6A062	SC6A162	SC6A261	SC6A062	SC6A162	SC6A261
						$I_{2N,PU}$ [A] ($f_{PWM,PU}$ = 4 kHz)			$I_{2N,PU}$ [A] ($f_{PWM,PU}$ = 8 kHz)		
	K_{EM} [V/1000 rpm]	M_N [Nm]	I_N [A]	M_0 [Nm]	I_0 [A]	4.5	10	19	4	9	15
IC 410 convection cooling						$I_{2N,PU}$ / I_0					
EZ301U	40	0.93	1.99	0.95	2.02	2.2			2.0		
EZ302U	86	1.59	1.6	1.68	1.67	2.7			2.4		
EZ303U	109	2.07	1.63	2.19	1.71	2.6			2.3		
EZ401U	96	2.8	2.74	3	2.88	1.6			1.4		
EZ402U	94	4.7	4.4	5.2	4.8		2.1			1.9	
EZ404U	116	6.9	5.8	8.6	6.6		1.5			1.4	
EZ501U	97	4.3	3.74	4.7	4	1.1			1.0		
EZ502U	121	7.4	5.46	8	5.76		1.7			1.6	
EZ503U	119	9.7	6.9	11.1	7.67		1.3			1.2	2.0
EZ505U	141	13.5	8.8	16	10		1.0	1.9			1.5
EZ701U	95	7.4	7.2	8.3	8		1.3			1.1	1.9
EZ702U	133	12	8.2	14.4	9.6		1.0	2.0			1.6
EZ703U	122	16.5	11.4	20.8	14			1.4			1.1
IC 416 forced ventilation						$I_{2N,PU}$ / I_0					
EZ401B	96	3.4	3.4	3.7	3.6	1.3			1.1		
EZ402B	94	5.9	5.5	6.3	5.8		1.7			1.6	
EZ404B	116	10.2	8.2	11.2	8.7		1.1	2.2		1.0	1.7
EZ501B	97	5.4	4.7	5.8	5		2.0			1.8	
EZ502B	121	10.3	7.8	11.2	8.16		1.2			1.1	1.8
EZ503B	119	14.4	10.9	15.9	11.8			1.6			1.3
EZ505B	141	20.2	13.7	23.4	14.7			1.3			1.0
EZ701B	95	9.7	9.5	10.5	10		1.0	1.9			1.5
EZ702B	133	16.6	11.8	19.3	12.9			1.5			1.2

EZ synchronous servo motor (n_N = 4500 rpm) – SC6

						SC6A062	SC6A162	SC6A261	SC6A062	SC6A162	SC6A261
						$I_{2N,PU}$ [A] ($f_{PWM,PU}$ = 4 kHz)			$I_{2N,PU}$ [A] ($f_{PWM,PU}$ = 8 kHz)		
	K_{EM} [V/1000 rpm]	M_N [Nm]	I_N [A]	M_0 [Nm]	I_0 [A]	4.5	10	19	4	9	15
IC 410 convection cooling						$I_{2N,PU}$ / I_0					
EZ505U	103	9.5	8.9	15.3	13.4			1.4			1.1
EZ703U	99	12.1	11.5	20	17.8			1.1			

EZ synchronous servo motor (n_N = 6000 rpm) – SC6

						SC6A062	SC6A162	SC6A261	SC6A062	SC6A162	SC6A261
						$I_{2N,PU}$ [A] ($f_{PWM,PU}$ = 4 kHz)			$I_{2N,PU}$ [A] ($f_{PWM,PU}$ = 8 kHz)		
	K_{EM} [V/1000 rpm]	M_N [Nm]	I_N [A]	M_0 [Nm]	I_0 [A]	4.5	10	19	4	9	15
IC 410 convection cooling						$I_{2N,PU}$ / I_0					
EZ301U	40	0.89	1.93	0.95	2.02	2.2			2.0		
EZ302U	42	1.5	3.18	1.68	3.48	1.3			1.1		
EZ303U	55	1.96	3.17	2.25	3.55	1.3			1.1		
EZ401U	47	2.3	4.56	2.8	5.36		1.9			1.7	
EZ402U	60	3.5	5.65	4.9	7.43		1.3			1.2	2.0
EZ404U	78	5.8	7.18	8.4	9.78		1.0	1.9			1.5
EZ501U	68	3.4	4.77	4.4	5.8		1.7			1.6	
EZ502U	72	5.2	7.35	7.8	9.8		1.0	1.9			1.5
EZ503U	84	6.2	7.64	10.6	11.6			1.6			1.3
EZ701U	76	5.2	6.68	7.9	9.38		1.1	2.0			1.6
EZ702U	82	7.2	8.96	14.3	16.5			1.2			
IC 416 forced ventilation						$I_{2N,PU}$ / I_0					
EZ401B	47	2.9	5.62	3.5	6.83		1.5			1.3	2.2
EZ402B	60	5.1	7.88	6.4	9.34		1.1	2.0			1.6
EZ404B	78	8	9.98	10.5	12			1.6			1.3
EZ501B	68	4.5	6.7	5.7	7.5		1.3			1.2	2.0
EZ502B	72	8.2	11.4	10.5	13.4			1.4			1.1
EZ503B	84	10.4	13.5	14.8	15.9			1.2			
EZ701B	76	7.5	10.6	10.2	12.4			1.5			1.2

EZHD synchronous servo motor with hollow shaft and direct drive (n_N = 3000 rpm) – SC6

						SC6A062	SC6A162	SC6A261	SC6A062	SC6A162	SC6A261
						$I_{2N,PU}$ [A] ($f_{PWM,PU}$ = 4 kHz)			$I_{2N,PU}$ [A] ($f_{PWM,PU}$ = 8 kHz)		
	K_{EM} [V/1000 rpm]	M_N [Nm]	I_N [A]	M_0 [Nm]	I_0 [A]	4.5	10	19	4	9	15
IC 410 convection cooling						$I_{2N,PU}$ / I_0					
EZHD0411U	96	1.9	2.36	2.6	2.89	1.6			1.4		
EZHD0412U	94	4.2	4.29	5.1	4.94		2.0			1.8	
EZHD0414U	116	7.7	6.3	8.5	6.88		1.5			1.3	
EZHD0511U	97	3	3.32	4.1	4.06	1.1					
EZHD0512U	121	7.0	5.59	7.8	6.13		1.6			1.5	
EZHD0513U	119	8.3	7.04	10.9	8.76		1.1	2.2		1.0	1.7
EZHD0515U	141	14	9.46	16.4	11			1.7			1.4
EZHD0711U	95	7.3	7.53	7.9	7.98		1.3			1.1	1.9
EZHD0712U	133	11.6	8.18	14.4	9.99		1.0	1.9			1.5
EZHD0713U	122	17.8	13.4	20.4	15.1			1.3			

EZS synchronous servo motor for screw drive (driven threaded spindle) (n_N = 3000 rpm) – SC6

						SC6A062	SC6A162	SC6A261	SC6A062	SC6A162	SC6A261
						$I_{2N,PU}$ [A] ($f_{PWM,PU}$ = 4 kHz)			$I_{2N,PU}$ [A] ($f_{PWM,PU}$ = 8 kHz)		
	K_{EM} [V/1000 rpm]	M_N [Nm]	I_N [A]	M_0 [Nm]	I_0 [A]	4.5	10	19	4	9	15
IC 410 convection cooling						$I_{2N,PU}$ / I_0					
EZS501U	97	3.85	3.65	4.3	3.95	1.1			1.0		
EZS502U	121	6.9	5.3	7.55	5.7		1.6			1.6	
EZS503U	119	9.1	6.7	10.7	7.6		1.3			1.2	2.0
EZS701U	95	6.65	6.8	7.65	7.7		1.3			1.2	1.9
EZS702U	133	11	7.75	13.5	9.25		1.1	2.1			1.6
EZS703U	122	15.3	10.8	19.7	13.5			1.4			1.1
IC 416 forced ventilation						$I_{2N,PU}$ / I_0					
EZS501B	97	5.1	4.7	5.45	5		2.0			1.8	
EZS502B	121	10	7.8	10.9	8.16		1.2			1.1	1.8
EZS503B	119	14.1	10.9	15.6	11.8			1.6			1.3
EZS701B	95	9.35	9.5	10.2	10		1.0	1.9			1.5
EZS702B	133	16.3	11.8	19	12.9			1.5			1.2

EZM synchronous servo motor for screw drive (driven threaded nut) (n_N = 3000 rpm) – SI6

						SC6A062	SC6A162	SC6A261	SC6A062	SC6A162	SC6A261
						$I_{2N,PU}$ [A] ($f_{PWM,PU}$ = 4 kHz)			$I_{2N,PU}$ [A] ($f_{PWM,PU}$ = 8 kHz)		
	K_{EM} [V/1000 rpm]	M_N [Nm]	I_N [A]	M_0 [Nm]	I_0 [A]	4.5	10	19	4	9	15
IC 410 convection cooling						$I_{2N,PU}$ / I_0					
EZM511U	97	3.65	3.55	4.25	4	1.1			1.0		
EZM512U	121	6.6	5.2	7.55	5.75		1.7			1.6	
EZM513U	119	8.8	6.55	10.6	7.6		1.3			1.2	2.0
EZM711U	95	6.35	6.6	7.3	7.4		1.4			1.2	2.0
EZM712U	133	10.6	7.5	13	8.9		1.1	2.1		1.0	1.7
EZM713U	122	14.7	10.4	18.9	13			1.5			1.2

2.4 Accessories

You can find information about the available accessories in the following chapters.

2.4.1 Safety technology

Information

The drive controller is delivered in the standard design without safety technology (option SZ6). If you want a drive controller with integrated safety technology, you must order it together with the drive controller. The safety modules are an integrated part of the drive controllers and must not be modified.

SZ6 option – Without safety technology

Included in the standard version.

ID No. 56660
Design without safety technology.

SR6 safety module – STO using terminals

ID No. 56661
Optional accessory for the use of the Safe Torque Off safety function (STO) in safety-relevant applications (PL e, SIL 3) in accordance with DIN EN ISO 13849-1 and DIN EN 61800-5-2. Connection to a higher-level safety circuit via terminal X12.

SY6 safety module – STO and SS1 using FSoE

ID No. 56662
Optional accessory for the use of the Safe Torque Off (STO) and Safe Stop 1 (SS1) safety functions in safety-relevant applications (PL e, SIL 3) in accordance with DIN EN ISO 13849-1 and DIN EN 61800-5-2. Connection to the higher-level safety circuit using Fail Safe over EtherCAT (FSoE).

2.4.2 Communication

The drive controller has two interfaces for the fieldbus connection on the top of the device as well as an Ethernet service interface on the front of the device. Cables for the connection are available separately.

EtherCAT or PROFINET fieldbus system

Please specify the desired fieldbus system when placing your purchase order for the base device, since the fieldbus communication is defined using the firmware.

EtherCAT cables

Ethernet patch cable, CAT5e, yellow.
The following designs are available:
ID No. 49313: Length approx. 0.2 m.
ID No. 49314: Length approx. 0.35 m.

PC connecting cables

ID No. 49857
Cable for connecting the X9 service interface to the PC, CAT5e, blue, 5 m.

USB 2.0 Ethernet adapter

ID No. 49940
Adapter for connecting Ethernet to a USB port.

2.4.3 Terminal set

For connection, you need the fitting terminal set for each SC6 drive controller.

Terminal set for drive controller – SZ6 option (without safety technology) or SY6 option (STO and SS1 using FSoE)

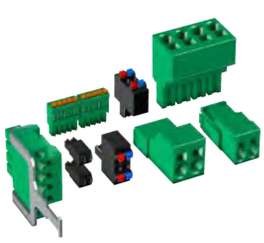

The following designs are available:
ID No. 138652
Terminal set for SC6A062Z/Y.
ID No. 138653
Terminal set for SC6A162Z/Y.
ID No. 138654
Terminal set for SC6A261Z/Y.

Terminal set for drive controller – SR6 option (STO via terminals)

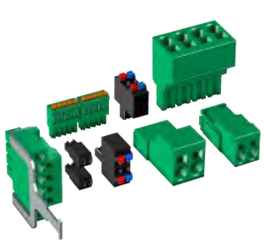

The following designs are available:
ID No. 138680
Terminal set for SC6A062R.
ID No. 138681
Terminal set for SC6A162R.
ID No. 138682
Terminal set for SC6A261R.

2.4.4 DC link connection

If you want to connect SC6 drive controllers in the DC link group, you will need Quick DC-Link modules of type DL6B.

You receive the DL6B rear section modules in different designs for a horizontal connection, suitable for the size of the drive controller.

The quick fastening clamps for attaching the copper rails and an insulation connection piece are contained in the scope of delivery. The copper rails are not included in the scope of delivery. These must have a cross-section of 5 x 12 mm. Insulation end sections are available separately.

Quick DC-Link DL6B for drive controller

The following designs are available:
DL6B10
ID No. 56655
Rear section module for size 0 drive controller:
SC6A062
DL6B11
ID No. 56656
Rear section module for size 1 or 2 drive controller:
SC6A162 and SC6A261

Quick DC-Link DL6B insulation end section

ID No. 56659
Insulation end sections for the left and right termination of the group, 2 pcs.

2.4.5 Braking resistor

In addition to drive controllers, STOBER offers the following braking resistors described below in various sizes and performance classes. For the selection, note the minimum permitted braking resistors specified in the technical data of the individual drive controller types.

2.4.5.1 Tubular fixed resistor FZMU, FZZMU

Type	FZMU 400×65	FZZMU 400×65
ID No.	49010	53895
SC6A062	X	—
SC6A162	(X)	X
SC6A261	(X)	X

Tab. 26: Assignment of FZMU, FZZMU braking resistor – SC6 drive controller

X	Recommended
(X)	Possible
—	Not possible

Properties

Specification	FZMU 400×65	FZZMU 400×65
ID No.	49010	53895
Type	Tubular fixed resistor	Tubular fixed resistor
Resistance [Ω]	100	47
Power [W]	600	1200
Therm. time const. τ_{th} [s]	40	40
Pulse power for < 1 s [kW]	18	36
U_{max} [V]	848	848
Weight without packaging [g]	2200	4170
Protection class	IP20	IP20
Test symbols	c UL us CE	c UL us CE

Tab. 27: FZMU, FZZMU specification

Dimensions

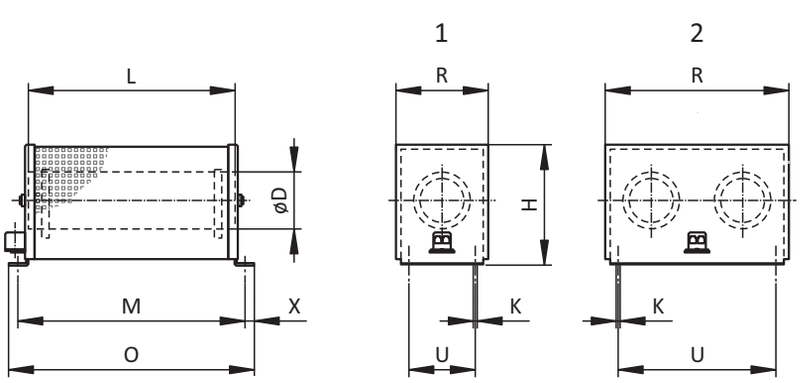

Fig. 4: FZMU (1), FZZMU (2) dimensional drawing

Dimension	FZMU 400×65	FZZMU 400×65
ID No.	49010	53895
L x D	400 × 65	400 × 65
H	120	120
K	6.5 × 12	6.5 × 12
M	430	426
O	485	485
R	92	185
U	64	150
X	10	10

Tab. 28: FZMU, FZZMU dimensions [mm]

2.4.5.2 GVADU, GBADU flat resistor

Type	GVADU 210×20	GBADU 265×30	GBADU 335×30
ID No.	55441	55442	55443
SC6A062	X	X	—
SC6A162	(X)	(X)	X
SC6A261	(X)	(X)	X

Tab. 29: Assignment of GVADU, GBADU braking resistor – SC6 drive controller

X	Recommended
(X)	Possible
—	Not possible

Properties

Specification	GVADU 210×20	GBADU 265×30	GBADU 335×30
ID No.	55441	55442	55443
Type	Flat resistor	Flat resistor	Flat resistor
Resistance [Ω]	100	100	47
Power [W]	150	300	400
Therm. time const. τ_{th} [s]	60	60	60
Pulse power for < 1 s [kW]	3.3	6.6	8.8
U_{max} [V]	848	848	848
Cable design	Radox	FEP	FEP
Cable length [mm]	500	1500	1500
Conductor cross-section [AWG]	18/19 (0.82 mm²)	14/19 (1.9 mm²)	14/19 (1.9 mm²)
Weight without packaging [g]	300	930	1200
Protection class	IP54	IP54	IP54
Test symbols			

Tab. 30: GVADU, GBADU specification

Dimensions

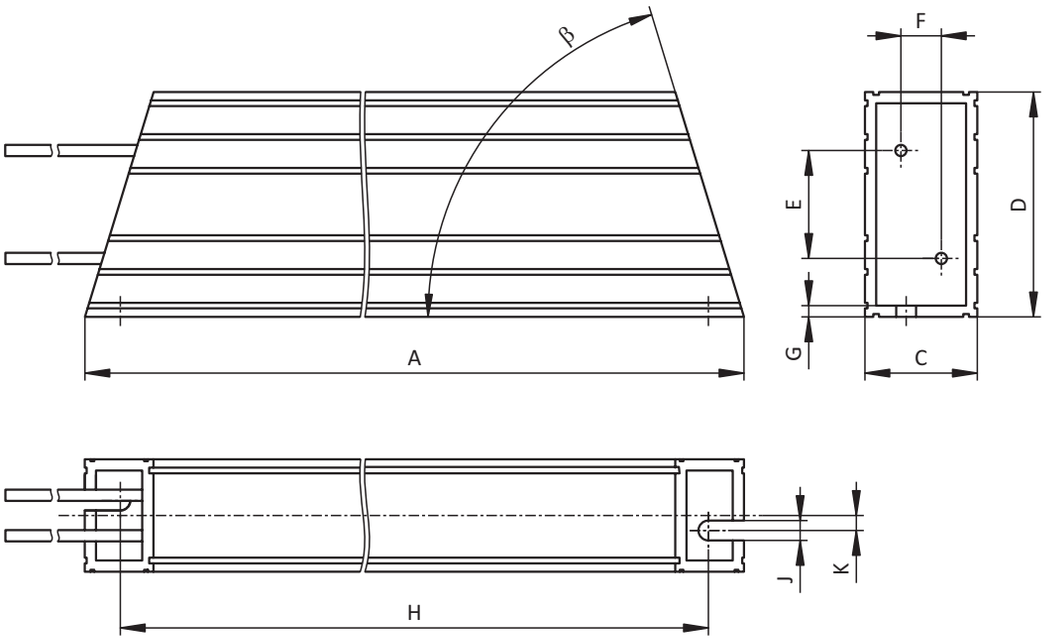

Fig. 5: GVADU, GBADU dimensional drawing

Dimension	GVADU 210×20	GBADU 265×30	GBADU 335×30
ID No.	55441	55442	55443
A	210	265	335
H	192	246	316
C	20	30	30
D	40	60	60
E	18.2	28.8	28.8
F	6.2	10.8	10.8
G	2	3	3
K	2.5	4	4
J	4.3	5.3	5.3
β	65°	73°	73°

Tab. 31: GVADU, GBADU dimensions [mm]

2.4.6 Choke

Technical specifications for suitable chokes can be found in the following chapters.

2.4.6.1 TEP output choke

Output chokes are required for connecting size 0 to 2 drive controllers to synchronous servo motors or asynchronous motors from a cable length > 50 m in order to reduce interference pulses and protect the drive system. If Lean motors are connected, output chokes must not be used.

Information

The following technical data only applies to a rotating magnetic field frequency of 200 Hz. For example, this rotating magnetic field frequency is achieved with a motor with 4 pole pairs and a nominal speed of 3000 rpm. Always observe the specified derating for higher rotating magnetic field frequencies. Also observe the relationship with the clock frequency.

Properties

Specification	TEP3720-0ES41	TEP3820-0CS41	TEP4020-0RS41
ID No.	53188	53189	53190
Voltage range	3 × 0 to 480 V_{AC}		
Frequency range	0 – 200 Hz		
Nominal current $I_{N,MF}$ at 4 kHz	4 A	17.5 A	38 A
Nominal current $I_{N,MF}$ at 8 kHz	3.3 A	15.2 A	30.4 A
Max. permitted motor cable length with output choke	100 m		
Max. surrounding temperature $\vartheta_{amb,max}$	40 °C		
Protection class	IP00		
Winding losses	11 W	29 W	61 W
Iron losses	25 W	16 W	33 W
Connection	Screw terminal		
Max. conductor cross-section	10 mm²		
UL Recognized Component (CAN; USA)	Yes		
Test symbols	c UL us CE		

Tab. 32: TEP specification

Dimensions

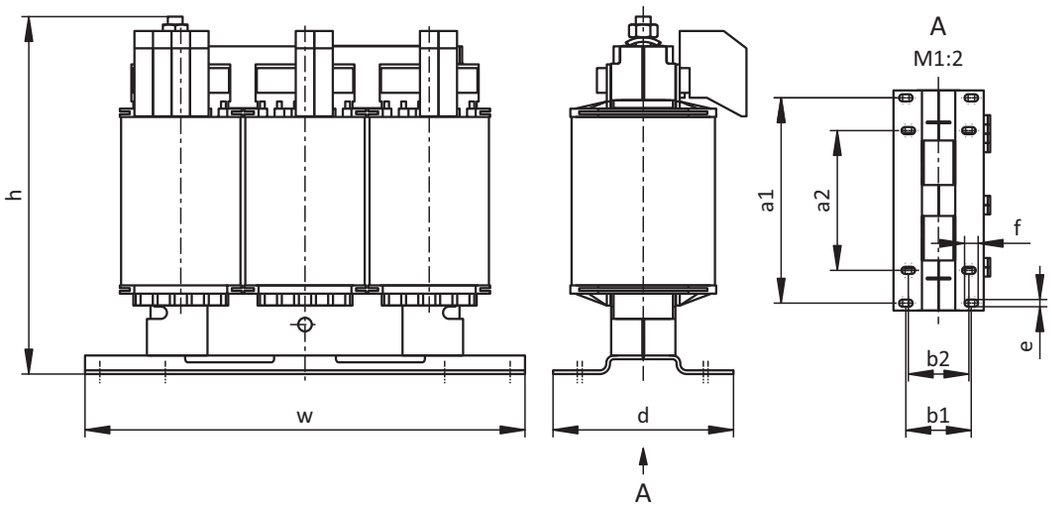

Fig. 6: TEP dimensional drawing

Dimension	TEP3720-0ES41	TEP3820-0CS41	TEP4020-0RS41
Height h [mm]	Max. 153	Max. 153	Max. 180
Width w [mm]	178	178	219
Depth d [mm]	73	88	119
Vertical distance – Fastening holes a1 [mm]	166	166	201
Vertical distance – Fastening holes a2 [mm]	113	113	136
Horizontal distance – Fastening holes b1 [mm]	53	68	89
Horizontal distance – Fastening holes b2 [mm]	49	64	76
Drill holes – Depth e [mm]	5.8	5.8	7
Drill holes – Width f [mm]	11	11	13
Screw connection – M	M5	M5	M6
Weight without packaging [g]	2900	5900	8800

Tab. 33: TEP dimensions and weight

2.4.7 Encoder battery module

Absolute Encoder Support AES

ID No. 55452
Battery module for buffering the supply voltage when using the EnDat 2.2 digital inductive encoder with battery-buffered multi-turn stage, for example EBI1135 or EBI135.
A battery is included.

Information

Note that a 15-pin extension cable between the socket and the AES may be necessary for the connection to the drive controller due to limited space.

a) A commercially available shielded extension cable with a 15-pin D-sub connector and a length of ≤ 1 m can be used between the socket and the AES.

AES replacement battery

ID No. 55453
Replacement battery for AES battery module.

2.4.8 HTL-to-TTL adapter

HT6 HTL-to-TTL adapter

ID No. 56665
Adapters for SC6 and SI6 series drive controllers for level conversion from HTL signals to TTL signals.
It is used to connect an HTL differential incremental encoder to terminal X4 of the drive controller.

2.5 Further information

2.5.1 Directives and standards

The following European directives and standards are relevant to the drive controllers:

- Machinery Directive 2006/42/EC
- Low Voltage Directive 2014/35/EU
- EMC Directive 2014/30/EU
- EN 61326-3-1:2008
- EN 61800-3:2004 and A1:2012
- EN 61800-5-1:2007
- EN 61800-5-2:2007
- EN 50178:1997
- IEC 61784-3:2010

2.5.2 Symbols, marks and test symbols

Grounding symbol
Grounding symbol in accordance with IEC 60417, symbol 5019.

RoHS lead-free mark
Marking in accordance with RoHS directive 2011-65-EU.

CE mark
Manufacturer's self declaration: The product meets the requirements of EU directives.

UL test symbol
This product is listed by UL for the United States and Canada. Representative samples of this product have been evaluated by UL and meet the requirements of applicable standards.

UL recognized component mark
This component or material is recognized by UL. Representative samples of this product have been evaluated by UL and meet applicable requirements.

2.5.3 Additional documentation

Additional documentation related to the product can be found at
http://www.stoeber.de/en/downloads/

Enter the ID of the documentation in the Search... field.

Documentation	ID
Manual for SC6 drive controllers	442790

3 SI6 Drive controllers

Table of contents

3.1 Overview 48

3.1.1 Features 49

3.1.2 Software components 50

3.1.3 Application training 51

3.2 Technical data 51

3.2.1 General technical data 51

3.2.2 Drive controllers 52

3.2.3 Supply module 60

3.2.4 DC link connection 63

3.2.5 Minimum clearances 65

3.3 Drive controller/motor combinations 66

3.4 Accessories 69

3.4.1 Safety technology 69

3.4.2 Communication 69

3.4.3 Terminal set 70

3.4.4 DC link connection 71

3.4.5 Braking resistor 72

3.4.6 Choke 76

3.4.7 Encoder battery module 80

3.4.8 HTL-to-TTL adapter 80

3.5 Further information 81

3.5.1 Directives and standards 81

3.5.2 Symbols, marks and test symbols 81

3.5.3 Additional documentation 81

3 Drive controllers

SI6

3.1 Overview

Drive control in a multi-axis drive system

Features

- Single or double-axis controller with a nominal output current up to 50 A and 250% overload capacity
- Supply modules up to 20 kW nominal power
- Sensorless position control of STOBER Lean motors
- Control of rotary synchronous servo motors, asynchronous motors and torque motors
- NEW: One Cable Solution EnDat 3
- Electronic motor nameplate via EnDat encoder interfaces
- Integrated EtherCAT or PROFINET communication
- STO safety technology using terminals or STO and SS1 using FSoE (Fail Safe over EtherCAT): SIL 3, PL e (cat. 4)
- Integrated brake control
- Energy supply over DC link connection
- Single-ended nominal power consumption on double-axis controllers for operation of motors with different power
- Variable feed-in power using supply modules that can be connected in parallel

3.1.1 Features

The completely re-designed STOBER multi-axis drive system consists of the SI6 drive controller and PS6 supply module combination. Matching Quick DC-Link modules handle the energy supply for the networked drive controllers. The SI6 drive controller is available in four sizes as a single or double-axis controller with a nominal output current of up to 50. The PS6 supply module is available in two sizes with a nominal power of 10 kW or 20 kW. As an economically attractive system with a minimized device width, the SI6 opens a new dimension in multi-axis applications.

For STOBER synchronous servo motors, we recommended operation with the EnDat 2.1/2.2 digital encoder or as a One Cable Solution with EnDat 3. These encoder systems make it possible to attain the highest control quality. It is possible to perform motor parameterization automatically from the electronic motor nameplate.

Drive control in multi-axis drive systems with SI6 and PS6

As small as a paperback

You save valuable space in your control cabinet because, with a width of just 45 mm, this drive controller is the most compact solution on the market. It offers all the features that a designer requires.

Dimension capacities precisely

4 axes? 16? Or even 97? A single SI6 drive controller can control up to two axes. Thanks to the multi-axis drive system, the number of motors or axes to be controlled can be scaled without limit. If required, SI6 drive controllers can be combined with stand-alone units from the STOBER SC6 or SD6 series. For the general energy supply, the drive controllers from the SI6, SC6 and SD6 series can be connected to each other using Quick DC-Link modules.

Tailored energy usage

The SI6 drive controllers are connected to a central supply module. There is no need for decentralized supply modules or fuses and cabling for each axis. When using double-axis modules, the unused power reserves of one axis can be used for the second axis. A significant reduction in space and cost!

Precise dynamics

The drive controller provides acceleration that is literally as fast as lightning. For example, in conjunction with the STOBER EZ401 synchronous servo motor: from 0 to 3000 rpm in 10 ms.

Fewer clicks, less wiring

Installation is exceptionally simple. No difficult wiring. The patented Quick DC-Link modules allow for a simple "click" into the standard copper rails, as well as the simple installation and connection of the drive controllers. The encoder communication and power connection of the motor takes place using a common cable connection. The EnDat 3 encoder system provides an electronic motor nameplate that takes care of the parameterization of motor data simply and safely. EnDat 2.2 digital offers an alternative interface, which also has an electronic nameplate function.

Safety functions

The safety concept of the drive controller is based on the STO (Safe Torque Off) function. The concept corresponds to SIL 3 according to DIN EN 61800-5-2 and PL e (Cat. 4) according to DIN EN ISO 13849-1. For double-axis controllers, the STO safety function has a two-channel structure that acts upon both axes. For connection to a higher-level safety circuit, different interfaces are available (terminals or FSoE).

Heavy duty

There is an extremely robust design concealed behind the elegant exterior. All components—from the stable, well-shielded sheet steel housing to the motor connectors—far exceed the set values of industry standards. The inside is also anything but small-scale: ample computer capacities, high-quality components, careful workmanship.

3.1.2 Software components

Project configuration and commissioning

The 6th generation of DriveControlSuite project configuration and commissioning software has all the functions for the efficient use of drive controllers in single-axis and multi-axis applications. The program guides you step by step through the complete project configuration and parameterization process using wizards.

Open communication

The Ethernet-based EtherCAT and PROFINET fieldbus systems are available in the drive controller.

Applications

Controller-based motion control is recommended for the central motion control of complex machines.

Using the controller-based operating modes of the CiA 402 application, you can implement applications with synchronized, cyclic set value specification (csp, csv, cst, ip) by a motion controller. In addition, the drive controllers can also independently handle motion tasks, such as referencing and jogging during commissioning.

Drive-based Drive Based and Drive Based Synchronous applications and drive-based operating modes (pp, pv, pt) of the CiA 402 application are also available for torque/force mode, velocity mode or positioning mode.

3.1.3 Application training

STOBER offers a multi-level training program that is essentially focused on the drive controller.

G6 Basic

Training content: System overview, installation and commissioning of the drive controller. Use of option modules. Parameterization, commissioning and diagnostics using the commissioning software. Remote maintenance. Basics of controller optimization. Configuration of the drive train. Integrated software functions. Software applications. Connection to a higher-level controller. Basics of safety technology. Practical exercises on training topics.

Software used: DriveControlSuite.

G6 Customized

Training content: Special knowledge for regulating, control and safety technology. Electronic cam disk. Practical exercises on training topics.

3.2 Technical data

Technical data for the drive controllers, supply modules and accessories can be found in the following chapters.

3.2.1 General technical data

The following specifications apply equally to the SI6 drive controller and the PS6 supply module.

Device features	
Protection class of the device	IP20
Protection class of the installation space	At least IP54
Protection class	Protection class I in accordance with DIN EN 61140
Radio interference suppression	Integrated line filter in accordance with DIN EN 61800-3, interference emission class C3
Overvoltage category	III in accordance with DIN EN 61800-5-1
Test symbols	CE, UL LISTED, EAC

Tab. 1: Device features

Transport and storage conditions	
Storage/ transport temperature	−20 °C to +70 °C Maximum change: 20 K/h
Relative humidity	Maximum relative humidity 85%, non-condensing
Vibration (transport) in accordance with DIN EN 60068-2-6	5 Hz ≤ f ≤ 9 Hz: 3.5 mm 9 Hz ≤ f ≤ 200 Hz: 10 m/s² 200 Hz ≤ f ≤ 500 Hz: 15 m/s²
Fall height for freefall[1] Weight < 100 kg in accordance with DIN EN 61800-2 (or DIN EN 60721-3-2:1997, class 2M1)	0.25 m

Tab. 2: Transport and storage conditions

[1] Only valid for components in original packaging

Operating conditions	
Surrounding temperature during operation	0 °C to 45 °C with nominal data 45 °C to 55 °C with derating −2.5% / K
Relative humidity	Maximum relative humidity 85%, non-condensing
Installation altitude	0 m to 1000 m above sea level without restrictions 1000 m to 2000 m above sea level with −1.5%/100 m derating
Pollution degree	Pollution degree 2 in accordance with EN 50178
Ventilation	Installed fan
Vibration (operation) in accordance with DIN EN 60068-2-6	5 Hz ≤ f ≤ 9 Hz: 0.35 mm 9 Hz ≤ f ≤ 200 Hz: 1 m/s²

Tab. 3: Operating conditions

Discharge times	
Self-discharge of DC link	15 min
DC link circuit fast discharge	Thanks to PS6 supply module in combination with a braking resistor: < 1 min

Tab. 4: Discharge times of the DC link circuit

3.2.2 Drive controllers

The following chapters contain specifications for the electrical data, dimensions and weight of the drive controller.

3.2.2.1 Type designation

SI	6	A	0	6	1	Z

Tab. 5: Example code for drive controller type designation

Code	Designation	Design
SI	Series	ServoInverter
6	Generation	Generation 6
A	Version	
0 – 3	Size	
6	Power output stage	Power output stage within the size
1 2	Axis controller	Single-axis controller Double-axis controller
Z R Y	Safety technology	SZ6: Without safety technology SR6: STO using terminals SY6: STO and SS1 using FSoE

Tab. 6: Meaning of the example code

3.2.2.2 Sizes

Type	ID No.	Size	Axis controller
SI6A061	56645	Size 0	Single-axis controller
SI6A062	56646	Size 0	Double-axis controller
SI6A161	56647	Size 1	Single-axis controller
SI6A162	56648	Size 1	Double-axis controller
SI6A261	56649	Size 2	Single-axis controller
SI6A262	56653	Size 2	Double-axis controller
SI6A361	56654	Size 3	Single-axis controller

Tab. 7: Available SI6 types and sizes

SI6 in sizes 0 to 3

Note that the basic device is delivered without terminals. Suitable terminal sets are available separately for each size.

3.2.2.3 Electrical data

The electrical data of the available SI6 sizes can be found in the following sections.

An explanation of the symbols used for formulas can be found in Chapter [▸ 12.1].

3.2.2.3.1 Control unit

Electrical data	All types
U_{1CU}	24 V_{DC}, +20%/−15%
I_{1maxCU}	0.5 A

Tab. 8: Control unit electrical data

3.2.2.3.2 Power unit: Size 0

Electrical data	SI6A061	SI6A062
U_{1PU}	280 – 800 V_{DC}	
f_{2PU}	0 – 700 Hz	
U_{2PU}	0 – max. $\frac{U_{1PU}}{\sqrt{2}}$	
C_{PU}	180 µF	270 µF

Tab. 9: SI6 electrical data, size 0

Nominal currents up to +45 °C (in the control cabinet)

Electrical data	SI6A061	SI6A062
$f_{PWM,PU}$	4 kHz	
$I_{2N,PU}$	5 A	2 × 5 A
I_{2maxPU}	210% for 2 s	

Tab. 10: SI6 electrical data, size 0, for 4 kHz clock frequency

Electrical data	SI6A061	SI6A062
$f_{PWM,PU}$	8 kHz	
$I_{2N,PU}$	4.5 A	2 × 4.5 A
I_{2maxPU}	250% for 2 s	

Tab. 11: SI6 electrical data, size 0, for 8 kHz clock frequency

3.2.2.3.3 Power unit: Size 1

Electrical data	SI6A161	SI6A162
U_{1PU}	280 – 800 V_{DC}	
f_{2PU}	0 – 700 Hz	
U_{2PU}	0 – max. $\frac{U_{1PU}}{\sqrt{2}}$	
C_{PU}	470 µF	940 µF

Tab. 12: SI6 electrical data, size 1

Nominal currents up to +45 °C (in the control cabinet)

Electrical data	SI6A161	SI6A162
$f_{PWM,PU}$	4 kHz	
$I_{2N,PU}$	12 A	2 × 12 A
I_{2maxPU}	210% for 2 s	

Tab. 13: SI6 electrical data, size 1, for 4 kHz clock frequency

Electrical data	SI6A161	SI6A162
$f_{PWM,PU}$	8 kHz	
$I_{2N,PU}$	10 A	2 × 10 A
I_{2maxPU}	250% for 2 s	

Tab. 14: SI6 electrical data, size 1, for 8 kHz clock frequency

3.2.2.3.4 Power unit: Size 2

Electrical data	SI6A261	SI6A262
U_{1PU}	280 – 800 V_{DC}	
f_{2PU}	0 – 700 Hz	
U_{2PU}	0 – max. $\frac{U_{1PU}}{\sqrt{2}}$	
C_{PU}	940 µF	2250 µF

Tab. 15: SI6 electrical data, size 2

Nominal currents up to +45 °C (in the control cabinet)

Electrical data	SI6A261	SI6A262
$f_{PWM,PU}$	4 kHz	
$I_{2N,PU}$	22 A	2 × 25 A
I_{2maxPU}	210% for 2 s	

Tab. 16: SI6 electrical data, size 2, for 4 kHz clock frequency

Electrical data	SI6A261	SI6A262
$f_{PWM,PU}$	8 kHz	
$I_{2N,PU}$	20 A	2 × 20 A
I_{2maxPU}	250% for 2 s	

Tab. 17: SI6 electrical data, size 2, for 8 kHz clock frequency

3.2.2.3.5 Power unit: Size 3

Electrical data	SI6A361
U_{1PU}	280 – 800 V_{DC}
f_{2PU}	0 – 700 Hz
U_{2PU}	0 – max. $\frac{U_{1PU}}{\sqrt{2}}$
C_{PU}	2250 µF

Tab. 18: SI6 electrical data, size 3

Nominal currents up to +45 °C (in the control cabinet)

Electrical data	SI6A361
$f_{PWM,PU}$	4 kHz
$I_{2N,PU}$	50 A
I_{2maxPU}	210% for 2 s

Tab. 19: SI6 electrical data, size 3, for 4 kHz clock frequency

Electrical data	SI6A361
$f_{PWM,PU}$	8 kHz
$I_{2N,PU}$	40 A
I_{2maxPU}	250% for 2 s

Tab. 20: SI6 electrical data, size 3, for 8 kHz clock frequency

3.2.2.3.6 Single-ended nominal power consumption on double-axis controllers

Operating two motors on one double-axis controller makes it possible to operate one of the motors with a continuous current above the nominal current of the drive controller if the continuous current of the second connected motor is lower than the nominal current of the drive controller. This enables economical combinations of double-axis controllers and motors.

The nominal output current for axis B can be determined using the following formula if the output current for axis A is known:

Example 1

$$I_{2PU(B)} = I_{2N,PU} - \left(I_{2PU(A)} - I_{2N,PU} \right) \times \frac{3}{5} \qquad \text{where} \qquad 0 \le I_{2PU(A)} \le I_{2N,PU}$$

Example 2

$$I_{2PU(B)} = I_{2N,PU} - \left(I_{2PU(A)} - I_{2N,PU} \right) \times \frac{5}{3} \qquad \text{where} \qquad I_{2N,PU} \le I_{2PU(A)} \le 1{,}6 \times I_{2N,PU}$$

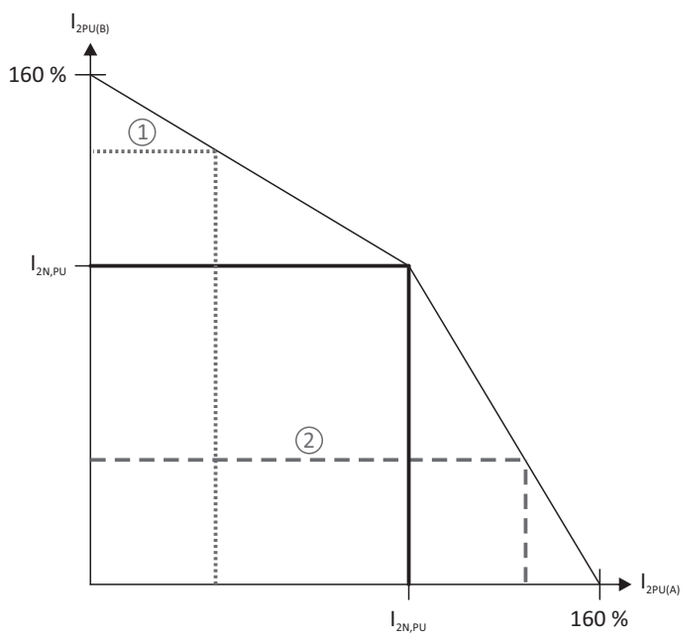

Fig. 1: Asymmetric load on double-axis controllers

Information

Note that the available maximum currents I_{2maxPU} of the axis controllers are also relative to the nominal output current $I_{2N,PU}$ for single-ended nominal power consumption.

3.2.2.3.7 Power loss data in accordance with EN 61800-9-2

Type	Nominal current $I_{2N,PU}$	Apparent power	Absolute losses $P_{V,CU}$[2]	Operating points[3]								IE class[4]	Comparison[5]
				(0/25)	(0/50)	(0/100)	(50/25)	(50/50)	(50/100)	(90/50)	(90/100)		
				Relative losses									
	[A]	[kVA]	[W]	[%]									
SI6A06x	5	3.5	Max. 10	0.71	0.86	1.33	0.76	0.97	1.61	1.13	2.13	IE2	
SI6A16x	12	8.3	Max. 10	0.55	0.71	1.19	0.59	0.80	1.44	0.94	1.87	IE2	
SI6A261	22	16.6	Max. 10	0.55	0.71	1.19	0.59	0.80	1.44	0.94	1.87	IE2	
SI6A262	25	17.3	Max. 10	0.45	0.62	1.12	0.50	0.74	1.47	0.95	2.12	IE2	
SI6A361	50	34.6	Max. 10	0.45	0.62	1.12	0.50	0.74	1.47	0.95	2.12	IE2	
				Absolute losses P_V									
	[A]	[kVA]	[W]	[W]									[%]
SI6A06x	5	3.5	Max. 10	25	30.2	46.5	26.5	33.8	56.5	39.5	74.4	IE2	24.9
SI6A16x	12	8.3	Max. 10	45.7	58.7	98.7	49.1	66.3	119.6	78.1	155.4	IE2	26.7
SI6A261	22	16.6	Max. 10	91.5	117.4	197.3	98.2	132.6	239.2	156.2	310.8	IE2	30.8
SI6A262	25	17.3	Max. 10	77.9	106.5	193.0	87.1	127.9	254.3	163.8	367.6	IE2	36.4
SI6A361	50	34.6	Max. 10	155.8	213.1	386.0	174.3	255.8	508.6	327.6	735.2	IE2	39.5

Tab. 21: Power loss data in accordance with EN 61800-9-2 for one axis of a SI6 drive controller

General conditions

The specified losses apply to an axis of a drive controller and take into account the proportionate losses of the PS6 supply module for that axis.

For a group with a total of x axes, the values are to be multiplied by the number of axis controllers (x), e.g. x = 4 for 1 × PS6 and 2 × SI6A062.

The loss data applies to drive controllers without any accessories.

The power loss calculation is based on a three-phase supply voltage with 400 V_{AC}/50 Hz.

The calculated data includes a supplement of 10% in accordance with EN 61800-9-2.

The power loss specifications refer to a clock frequency of 4 kHz.

The absolute losses for a power unit that is switched off refer to the 24 V_{DC} power supply of the control electronics.

[2] Absolute losses for a power unit that is switched off

[3] Operating points for relative motor stator frequency in % and relative torque current in %

[4] IE class in accordance with EN 61800-9-2

[5] Comparison of the losses for the reference related to IE2 in the nominal point (90, 100)

3.2.2.4 Derating

When dimensioning the drive controller, observe the derating of the nominal output current as a function of the clock frequency, surrounding temperature and installation altitude. There is no restriction for a surrounding temperature from 0 °C to 45 °C and an installation altitude of 0 m to 1000 m. The details given below apply to values outside these ranges.

3.2.2.4.1 Effect of the clock frequency

Changing the clock frequency f_{PWM} affects the amount of noise produced by the drive, among other things. However, increasing the clock frequency results in increased losses. During project configuration, define the highest clock frequency and use it to determine the nominal output current $I_{2N,PU}$ for dimensioning the drive controller.

Type	$I_{2N,PU}$ 4 kHz [A]	$I_{2N,PU}$ 8 kHz [A]	$I_{2N,PU}$ 16 kHz [A]
SI6A061	5	4.5	3.5
SI6A062	2 × 5	2 × 4.5	2 × 3.5
SI6A161	12	10	6
SI6A162	2 × 12	2 × 10	2 × 6
SI6A261	22	20	10
SI6A262	2 × 25	2 × 20	2 × 10
SI6A361	50	40	—

Tab. 22: Nominal output current $I_{2N,PU}$ dependent on the clock frequency

3.2.2.4.2 Effect of the surrounding temperature

Derating as a function of the surrounding temperature is determined as follows:

- 0 °C to 45 °C: No restrictions (D_T = 100%)
- 45 °C to 55 °C: Derating −2.5%/K

Example

The drive controller needs to be operated at 50 °C.

The derating factor D_T is calculated as follows

D_T= 100% − 5 × 2.5% = 87.5%

3.2.2.4.3 Effect of the installation altitude

Derating as a function of the installation altitude is determined as follows:

- 0 m to 1000 m: No restriction (D_{IA} = 100%)
- 1000 m to 2000 m: Derating −1.5%/100 m

Example

The drive controller needs to be installed at an altitude of 1500 m above sea level.

The derating factor D_{IA} is calculated as follows:

D_{IA} = 100% − 5 × 1.5% = 92.5%

3.2.2.4.4 Calculating the derating

Follow these steps for the calculation:

1. Determine the highest clock frequency (f_{PWM}) that will be used during operation and use it to determine the nominal current $I_{2N,PU}$.
2. Determine the derating factors for installation altitude and surrounding temperature.
3. Calculate the reduced nominal current $I_{2N,PU(red)}$ in accordance with the following formula:
   $I_{2N,PU(red)} = I_{2N,PU} \times D_T \times D_{IA}$

Example

A drive controller of type SI6A061 needs to be operated at a clock frequency of 8 kHz at an altitude of 1500 m above sea level and a surrounding temperature of 50 °C.

The nominal current of the SI6A061 at 8 kHz is 4.5 A. The derating factor D_T is calculated as follows:

D_T = 100% − 5 × 2.5% = 87.5%

The derating factor D_{IA} is calculated as follows:

D_{IA} = 100% − 5 × 1.5% = 92.5%

The output current of importance for the project configuration is:

$I_{2N,PU(red)}$ = 4.5 A × 0.875 × 0.925 = 3.64 A

3.2.2.5 Dimensions

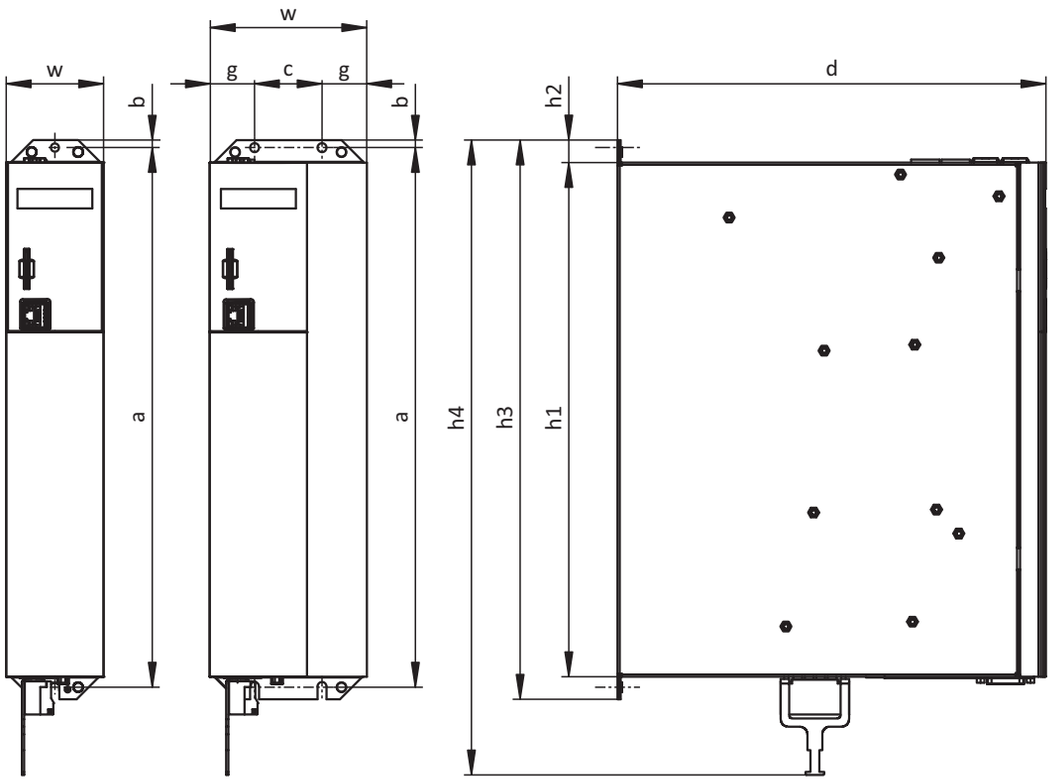

0 – 2 **3**

Fig. 2: SI6 dimensional drawing

Dimension			Size 0	Size 1	Size 2[6]	Size 2[7]	Size 3
Drive controller	Width	w	45	65		105	
	Depth	d	265	286			
	Body height	h1	343				
	Fastening clip height	h2	15				
	Height incl. fastening clips	h3	373				
	Total height incl. shield connection	h4	423				
Fastening holes (M5)	Vertical distance	a	360+2				
	Vertical distance to the upper edge	b	5				
	Horizontal spacing of the fastening holes	c	45				
	Horizontal distance to the side edge	g	30				

Tab. 23: SI6 dimensions [mm]

[6] Single-axis controller

[7] Double-axis controller

3.2.2.6 Weight

Type	Weight without packaging [g]	Weight with packaging [g]
SI6A061	2980	4600
SI6A062	3460	5060
SI6A161	3880	5260
SI6A162	4820	6240
SI6A261	4760	6200
SI6A262	6240	7420
SI6A361	6180	7360

Tab. 24: SI6 weight [g]

3.2.3 Supply module

The following section contains specifications for the electrical data, dimensions and weight of the PS6 supply module.

3.2.3.1 Type designation

PS	**6**	**A**	**2**	**4**

Tab. 25: Example code for supply module type designation

Code	Designation	Design
PS	Series	PowerSupply
6	Generation	Generation 6
A	Version	
2 – 3	Size	
4	Power output stage	

Tab. 26: Meaning of the example code

3.2.3.2 Sizes

Type	ID No.	Size
PS6A24	56650	Size 2
PS6A34	56651	Size 3

Tab. 27: Available PS6 types and sizes

PS6 in sizes 2 and 3

Note that the basic device is delivered without terminals. Suitable terminal sets are available separately for each size.

3.2.3.3 Electrical data

The electrical data of the available PS6 sizes as well as the properties of the brake chopper can be found in the following sections.

Information

The STO safety function is available for safe stopping as an alternative to continuous, cyclical power-on/power-off operation.

An explanation of the symbols used for formulas can be found in Chapter [▸ 12.1].

3.2.3.3.1 Control unit

Electrical data	All types
U_{1CU}	24 V_{DC}, +20%/–15%
I_{1maxCU}	0.5 A

Tab. 28: Control unit electrical data

3.2.3.3.2 Power unit: Size 2

Electrical data	PS6A24
U_{1PU}	3 × 400 V_{AC}, +32%/–50%, 50/60 Hz; 3 × 480 V_{AC}, +10%/–58%, 50/60 Hz
U_{2PU}	√2 × U_{1PU}
$P_{N,PU}$	10 kW
$I_{1N,PU}$	25 A
I_{1maxPU}	$I_{1N,PU}$ × 180% for 5 s; $I_{1N,PU}$ × 150% for 30 s
$C_{N,PU}$	5000 µF

Tab. 29: PS6 electrical data, size 2

3.2.3.3.3 Power unit: Size 3

Electrical data	PS6A34
U_{1PU}	3 × 400 V_{AC}, +32%/–50%, 50/60 Hz; 3 × 480 V_{AC}, +10%/–58%, 50/60 Hz
U_{2PU}	√2 × U_{1PU}
$P_{N,PU}$	20 kW
$I_{1N,PU}$	50 A
I_{1maxPU}	$I_{1N,PU}$ × 180% for 5 s; $I_{1N,PU}$ × 150% for 30 s
$C_{N,PU}$	10000 µF

Tab. 30: PS6 electrical data, size 3

3.2.3.3.4 Parallel connection

The power and current increase if supply modules are connected in parallel. Take into account that the total is derated by a factor of 0.8 in doing so.

The charging capacity of the supply modules can be increased by a parallel connection only if the power grid supply is connected to all supply modules simultaneously. Increasing the charging capacity also requires derating the total by a factor of 0.8.

The following table shows example combinations for parallel connection.

Electrical data	2 x PS6A24	3 x PS6A24	2 x PS6A34	3 x PS6A34
$P_{N,PU}$	16 kW	24 kW	32 kW	48 kW
$I_{1N,PU}$	40 A	60 A	80 A	120 A
C_{maxPU}	8000 µF	12000 µF	16000 µF	24000 µF

Tab. 31: Electrical data for parallel connection: Example combinations

The following general conditions apply to the parallel connection of several PS6 supply modules:

- Only the same sizes may be connected in parallel.
- You can connect a maximum of 3 PS6A34 in parallel.

3.2.3.3.5 Brake chopper

Electrical data	All types
U_{onCH}	780 – 800 V_{DC}
U_{offCH}	740 – 760 V_{DC}
R_{2minRB}	22 Ω
P_{maxRB}	29.1 kW
P_{effRB}	13.2 kW

Tab. 32: Brake chopper electrical data

3.2.3.3.6 Fast discharge

Fast discharge is activated when no power supply is present for 20 s and the DC link voltage has reduced over this time. For active fast discharge, the DC link is discharged via the brake chopper and the braking resistor. Fast discharge does not take place for constant or increasing DC link voltage as this behavior indicates a second supply module in the DC link group. If the temperature sensor of the braking resistor is active, the fast discharge also remains off.

3.2.3.4 Dimensions

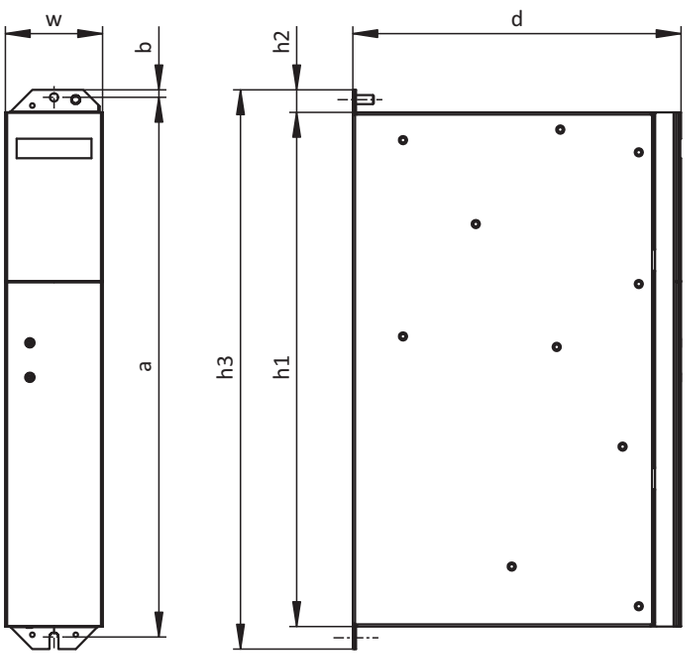

Fig. 3: PS6 dimensional drawing

Dimension			Size 2	Size 3
Supply module	Width	w	45	65
	Depth	d	204	219
	Body height	h1	343	
	Fastening clip height	h2	15	
	Height incl. fastening clips	h3	373	
Fastening holes (M5)	Vertical distance	a	360+2	
	Vertical distance to the upper edge	b	5	

Tab. 33: PS6 dimensions [mm]

3.2.3.5 Weight

Type	Weight without packaging [g]	Weight with packaging [g]
PS6A24	2680	4180
PS6A34	3820	4920

Tab. 34: PS6 weight [g]

3.2.4 DC link connection

The following section contains specifications for the electrical data, dimensions and weight of the DL6B modules Quick DC-Link.

3.2.4.1 General technical data

The following information applies to all Quick DC-Link modules and corresponds to the general technical data for the base device.

Device features	
Protection class of the device	IP20 (if built over with drive controller or supply module)
Protection class	Protection class I in accordance with DIN EN 61140 (if built over with drive controller or supply module)
Protection class of the installation space	At least IP54

Tab. 35: Device features

Transport and storage conditions	
Storage/ transport temperature	−20 °C to +70 °C Maximum change: 20 K/h
Relative humidity	Maximum relative humidity 85%, non-condensing
Vibration (transport) in accordance with DIN EN 60068-2-6	5 Hz ≤ f ≤ 9 Hz: 3.5 mm 9 Hz ≤ f ≤ 200 Hz: 10 m/s² 200 Hz ≤ f ≤ 500 Hz: 15 m/s²
Fall height for freefall[8] Weight < 100 kg in accordance with DIN EN 61800-2 (or DIN EN 60721-3-2:1997, class 2M1)	0.25 m

Tab. 36: Transport and storage conditions

Operating conditions	
Surrounding temperature during operation	0 °C to 45 °C with nominal data 45 °C to 55 °C with derating −2.5% / K
Relative humidity	Maximum relative humidity 85%, non-condensing
Installation altitude	0 m to 1000 m above sea level without restrictions 1000 m to 2000 m above sea level with −1.5%/100 m derating
Pollution degree	Pollution degree 2 in accordance with EN 50178
Vibration (operation) in accordance with DIN EN 60068-2-6	5 Hz ≤ f ≤ 9 Hz: 0.35 mm 9 Hz ≤ f ≤ 200 Hz: 1 m/s²

Tab. 37: Operating conditions

3.2.4.2 assignment to DL6B – SI6 and PS6

DL6B is available in the following designs suitable for the individual drive controller types and supply module types:

Type	DL6B10	DL6B11	DL6B12	DL6B20	DL6B21
ID No.	56655	56656	56663	56657	56658
SI6A061	X	–	–	–	–
SI6A062	X	–	–	–	–
SI6A161	–	X	–	–	–
SI6A162	–	X	–	–	–
SI6A261	–	X	–	–	–
SI6A262	–	–	X	–	–
SI6A361	–	–	X	–	–
PS6A24	–	–	–	X	–
PS6A34	–	–	–	–	X

Tab. 38: DL6B assignment to SI6 and PS6

[8] Only valid for components in original packaging

3.2.4.3 Dimensions

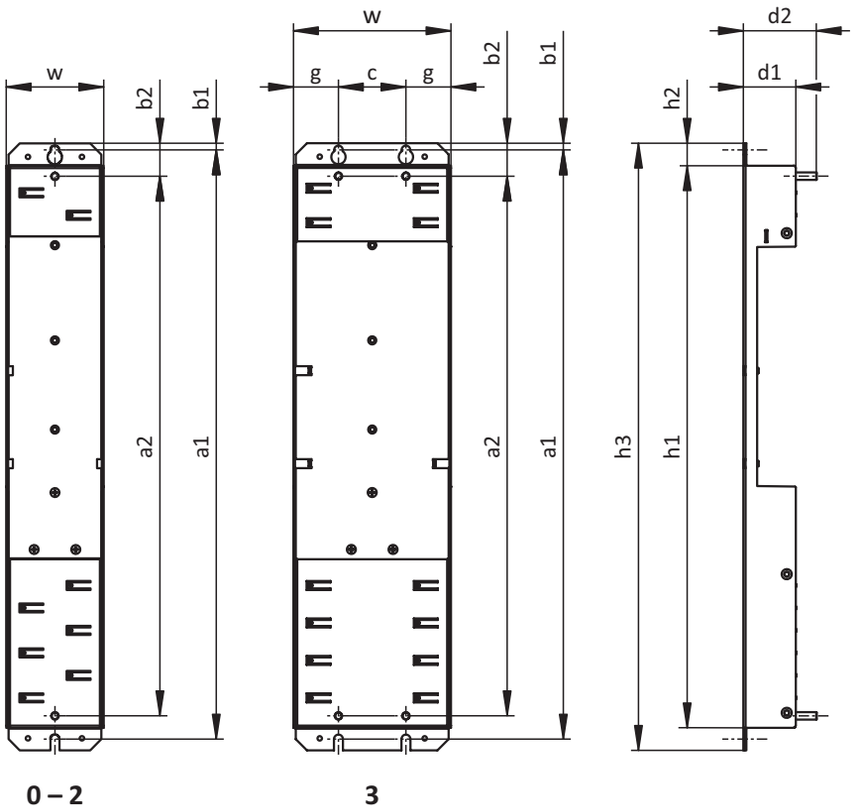

Fig. 4: DL6B dimensional drawing

Dimension			DL6B10 DL6B20	DL6B11 DL6B21	DL6B12
Quick DC-Link	Width	w	45	65	105
	Depth	d1	35		
	Depth incl. attachment bolts	d2	49		
	Height	h1	375		
	Fastening clip height	h2	15		
	Height incl. fastening clips	h3	405		
Fastening holes	Vertical distance (wall mounting)	a1	393+2		
	Vertical distance (module mounting)	a2	360		
	Vertical distance to the upper edge	b1	4.5		
	Vertical distance to the upper edge	b2	22		
	Horizontal spacing of the fastening holes	c	—		45
	Horizontal distance to the side edge	g	—		30

Tab. 39: DL6B dimensions [mm]

3.2.4.4 Weight

Type	Weight without packaging [g]	Weight with packaging [g]
DL6B10	440	480
DL6B11	560	600
DL6B12	880	920
DL6B20	480	520
DL6B21	740	780

Tab. 40: DL6B weight [g]

3.2.5 Minimum clearances

Drive controllers and supply modules

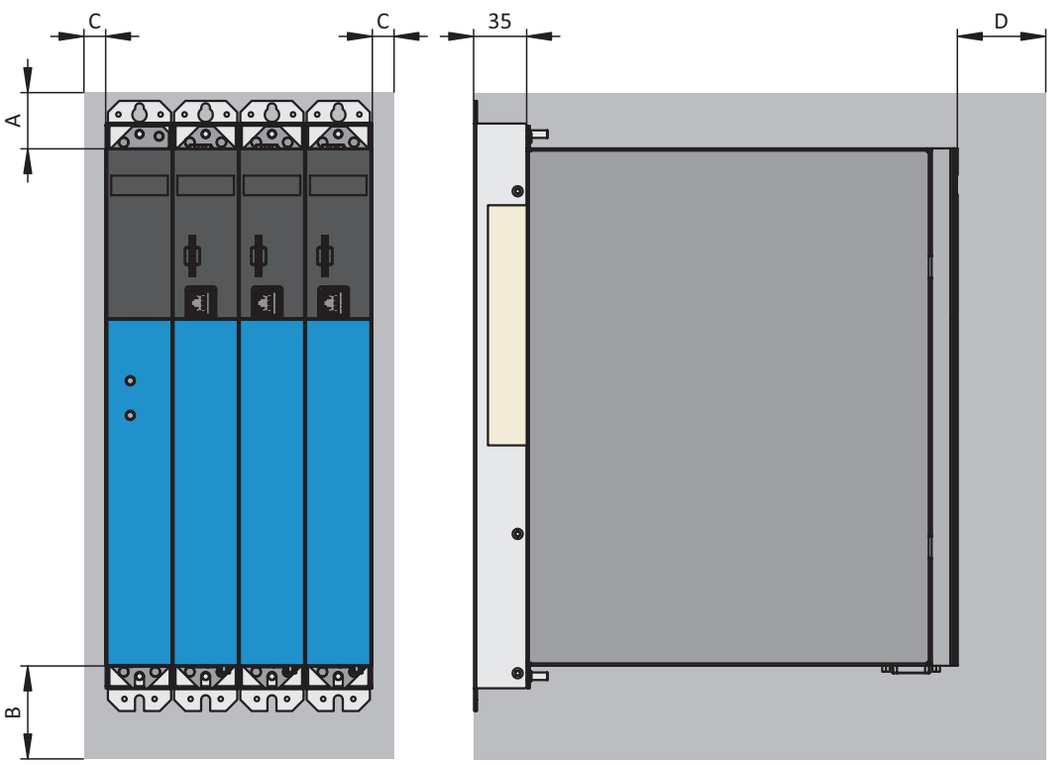

Fig. 5: Minimum clearances

The specified dimensions refer to the outside edges of the drive controller or supply module including the Quick DC-Link rear section module.

Minimum clearance	A (above)	B (below)	C (on the side)	D (in front)
All sizes	100	200	5	50[9]

Tab. 41: Minimum clearances [mm]

Chokes and filters

Avoid installation below drive controllers or supply modules. For installation in a control cabinet, a distance of approximately 100 mm to other neighboring components is recommended. This distance ensures proper heat dissipation for chokes and filters.

Braking resistors

Avoid installation below drive controllers or supply modules. In order for heated air to flow out unimpeded, a minimum clearance of approximately 200 mm must be maintained in relation to neighboring components or walls and approximately 300 mm must be maintained to components above or ceilings.

[9] Minimum clearance to be taken into account for permanent connection of the X9 service interface

3.3 Drive controller/motor combinations

An explanation of the symbols used for formulas can be found in Chapter [▸ 12.1].

EZ synchronous servo motor (n_N = 2000 rpm) – SI6

						SI6A061 SI6A062	SI6A161 SI6A162	SI6A261	SI6A262	SI6A361	SI6A061 SI6A062	SI6A161 SI6A162	SI6A261	SI6A262	SI6A361
						$I_{2N,PU}$ [A] ($f_{PWM,PU}$ = 4 kHz)					$I_{2N,PU}$ [A] ($f_{PWM,PU}$ = 8 kHz)				
	K_{EM} [V/1000 rpm]	M_N [Nm]	I_N [A]	M_0 [Nm]	I_0 [A]	5	12	22	25	50	4.5	10	20	20	40
IC 410 convection cooling						$I_{2N,PU}$ / I_0									
EZ805U	142	43.7	25.9	66.1	37.9					1.3					1.1

EZ synchronous servo motor (n_N = 3000 rpm) – SI6

						SI6A061 SI6A062	SI6A161 SI6A162	SI6A261	SI6A262	SI6A361	SI6A061 SI6A062	SI6A161 SI6A162	SI6A261	SI6A262	SI6A361
						$I_{2N,PU}$ [A] ($f_{PWM,PU}$ = 4 kHz)					$I_{2N,PU}$ [A] ($f_{PWM,PU}$ = 8 kHz)				
	K_{EM} [V/1000 rpm]	M_N [Nm]	I_N [A]	M_0 [Nm]	I_0 [A]	5	12	22	25	50	4.5	10	20	20	40
IC 410 convection cooling						$I_{2N,PU}$ / I_0									
EZ301U	40	0.93	1.99	0.95	2.02	2.5					2.2				
EZ302U	86	1.59	1.6	1.68	1.67	3.0					2.7				
EZ303U	109	2.07	1.63	2.19	1.71	2.9					2.6				
EZ401U	96	2.8	2.74	3	2.88	1.7					1.6				
EZ402U	94	4.7	4.4	5.2	4.8	1.0						2.1			
EZ404U	116	6.9	5.8	8.6	6.6		1.8					1.5			
EZ501U	97	4.3	3.74	4.7	4	1.3					1.1				
EZ502U	121	7.4	5.46	8	5.76		2.1					1.7			
EZ503U	119	9.7	6.9	11.1	7.67		1.6					1.3			
EZ505U	141	13.5	8.8	16	10		1.2	2.0				1.0	2.0	2.0	
EZ701U	95	7.4	7.2	8.3	8		1.5					1.3			
EZ702U	133	12	8.2	14.4	9.6		1.3					1.0	2.1	2.1	
EZ703U	122	16.5	11.4	20.8	14			1.6	1.8				1.4	1.4	
EZ705U	140	21.3	14.2	30.2	19.5			1.1	1.3				1.0	1.0	2.1
EZ802U	136	22.3	13.9	37.1	22.3				1.1						1.8
EZ803U	131	26.6	17.7	48.2	31.1					1.6					1.3
IC 416 forced ventilation						$I_{2N,PU}$ / I_0									
EZ401B	96	3.4	3.4	3.7	3.6	1.4					1.3				
EZ402B	94	5.9	5.5	6.3	5.8		2.1					1.7			
EZ404B	116	10.2	8.2	11.2	8.7		1.4					1.1		2.0	
EZ501B	97	5.4	4.7	5.8	5	1.0						2.0			
EZ502B	121	10.3	7.8	11.2	8.16		1.5					1.2			
EZ503B	119	14.4	10.9	15.9	11.8		1.0	1.9	2.1				1.7	1.7	
EZ505B	141	20.2	13.7	23.4	14.7			1.5	1.7				1.4	1.4	
EZ701B	95	9.7	9.5	10.5	10		1.2	2.2				1.0	2.0	2.0	
EZ702B	133	16.6	11.8	19.3	12.9			1.7	1.9				1.6	1.6	
EZ703B	122	24	18.2	28	20			1.1	1.3				1.0	1.0	2.0
EZ705B	140	33.8	22.9	41.8	26.5					1.9					1.5
EZ802B	136	34.3	26.5	47.9	28.9					1.7					1.4
EZ803B	131	49	35.9	66.7	42.3					1.2					

EZ synchronous servo motor (n_N = 4500 rpm) – SI6

						SI6A061 SI6A062	SI6A161 SI6A162	SI6A261	SI6A262	SI6A361	SI6A061 SI6A062	SI6A161 SI6A162	SI6A261	SI6A262	SI6A361
						$I_{2N,PU}$ [A] ($f_{PWM,PU}$ = 4 kHz)					$I_{2N,PU}$ [A] ($f_{PWM,PU}$ = 8 kHz)				
	K_{EM} [V/1000 rpm]	M_N [Nm]	I_N [A]	M_0 [Nm]	I_0 [A]	5	12	22	25	50	4.5	10	20	20	40
IC 410 convection cooling						$I_{2N,PU}$ / I_0									
EZ505U	103	9.5	8.9	15.3	13.4			1.6	1.9				1.5	1.5	
EZ703U	99	12.1	11.5	20	17.8			1.2	1.4				1.1	1.1	
EZ705U	106	16.4	14.8	30	25.2					2.0					1.6
EZ802U	90	10.5	11.2	34.5	33.3					1.5					1.2
IC 416 forced ventilation						$I_{2N,PU}$ / I_0									
EZ505B	103	16.4	16.4	22	19.4			1.1	1.3				1.0	1.0	2.1
EZ703B	99	19.8	20.3	27.2	24.2				1.0	2.1					1.7
EZ705B	106	27.7	25.4	39.4	32.8					1.5					1.2
EZ802B	90	30.6	30.5	47.4	45.1					1.1					

EZ synchronous servo motor (n_N = 6000 rpm) – SI6

						SI6A061 SI6A062	SI6A161 SI6A162	SI6A261	SI6A262	SI6A361	SI6A061 SI6A062	SI6A161 SI6A162	SI6A261	SI6A262	SI6A361
						$I_{2N,PU}$ [A] ($f_{PWM,PU}$ = 4 kHz)					$I_{2N,PU}$ [A] ($f_{PWM,PU}$ = 8 kHz)				
	K_{EM} [V/1000 rpm]	M_N [Nm]	I_N [A]	M_0 [Nm]	I_0 [A]	5	12	22	25	50	4.5	10	20	20	40
IC 410 convection cooling						$I_{2N,PU}$ / I_0									
EZ301U	40	0.89	1.93	0.95	2.02	2.5					2.2				
EZ302U	42	1.5	3.18	1.68	3.48	1.4					1.3				
EZ303U	55	1.96	3.17	2.25	3.55	1.4					1.3				
EZ401U	47	2.3	4.56	2.8	5.36		2.2					1.9			
EZ402U	60	3.5	5.65	4.9	7.43		1.6					1.3			
EZ404U	78	5.8	7.18	8.4	9.78		1.2					1.0	2.0	2.0	
EZ501U	68	3.4	4.77	4.4	5.8		2.1					1.7			
EZ502U	72	5.2	7.35	7.8	9.8		1.2					1.0	2.0	2.0	
EZ503U	84	6.2	7.64	10.6	11.6		1.0	1.9	2.2				1.7	1.7	
EZ701U	76	5.2	6.68	7.9	9.38		1.3					1.1	2.1	2.1	
EZ702U	82	7.2	8.96	14.3	16.5			1.3	1.5				1.2	1.2	
IC 416 forced ventilation						$I_{2N,PU}$ / I_0									
EZ401B	47	2.9	5.62	3.5	6.83		1.8					1.5			
EZ402B	60	5.1	7.88	6.4	9.34		1.3					1.1	2.1	2.1	
EZ404B	78	8	9.98	10.5	12		1.0	1.8	2.1				1.7	1.7	
EZ501B	68	4.5	6.7	5.7	7.5		1.6					1.3			
EZ502B	72	8.2	11.4	10.5	13.4			1.6	1.9				1.5	1.5	
EZ503B	84	10.4	13.5	14.8	15.9			1.4	1.6				1.3	1.3	
EZ701B	76	7.5	10.6	10.2	12.4			1.8	2.0				1.6	1.6	
EZ702B	82	12.5	16.7	19.3	22.1				1.1						1.8

EZHD synchronous servo motor with hollow shaft and direct drive (n_N = 3000 rpm) – SI6

						SI6A061 SI6A062	SI6A161 SI6A162	SI6A261	SI6A262	SI6A361	SI6A061 SI6A062	SI6A161 SI6A162	SI6A261	SI6A262	SI6A361
						$I_{2N,PU}$ [A] ($f_{PWM,PU}$ = 4 kHz)					$I_{2N,PU}$ [A] ($f_{PWM,PU}$ = 8 kHz)				
	K_{EM} [V/1000 rpm]	M_N [Nm]	I_N [A]	M_0 [Nm]	I_0 [A]	5	12	22	25	50	4.5	10	20	20	40
IC 410 convection cooling						$I_{2N,PU}$ / I_0									
EZHD0411U	96	1.9	2.36	2.6	2.89	1.7					1.6				
EZHD0412U	94	4.2	4.29	5.1	4.94	1.0						2.0			
EZHD0414U	116	7.7	6.3	8.5	6.88		1.7					1.5			
EZHD0511U	97	3	3.32	4.1	4.06	1.2					1.1				
EZHD0512U	121	7.0	5.59	7.8	6.13		2.0					1.6			
EZHD0513U	119	8.3	7.04	10.9	8.76		1.4					1.1			
EZHD0515U	141	14	9.46	16.4	11		1.1	2.0					1.8	1.8	
EZHD0711U	95	7.3	7.53	7.9	7.98		1.5					1.3			
EZHD0712U	133	11.6	8.18	14.4	9.99		1.2					1.0	2.0	2.0	
EZHD0713U	122	17.8	13.4	20.4	15.1			1.5	1.7				1.3	1.3	
EZHD0715U	140	24.6	17.2	31.1	21.1			1.0	1.2						1.9

EZS synchronous servo motor for screw drive (driven threaded spindle) (n_N = 3000 rpm) – SI6

						SI6A061 SI6A062	SI6A161 SI6A162	SI6A261	SI6A262	SI6A361	SI6A061 SI6A062	SI6A161 SI6A162	SI6A261	SI6A262	SI6A361
						$I_{2N,PU}$ [A] ($f_{PWM,PU}$ = 4 kHz)					$I_{2N,PU}$ [A] ($f_{PWM,PU}$ = 8 kHz)				
	K_{EM} [V/1000 rpm]	M_N [Nm]	I_N [A]	M_0 [Nm]	I_0 [A]	5	12	22	25	50	4.5	10	20	20	40
IC 410 convection cooling						$I_{2N,PU}$ / I_0									
EZS501U	97	3.85	3.65	4.3	3.95	1.3					1.1				
EZS502U	121	6.9	5.3	7.55	5.7		2.1					1.8			
EZS503U	119	9.1	6.7	10.7	7.6		1.6					1.3			
EZS701U	95	6.65	6.8	7.65	7.7		1.6					1.3			
EZS702U	133	11	7.75	13.5	9.25		1.3					1.1	2.2	2.2	
EZS703U	122	15.3	10.8	19.7	13.5			1.6	1.9				1.5	1.5	
IC 416 forced ventilation						$I_{2N,PU}$ / I_0									
EZS501B	97	5.1	4.7	5.45	5	1.0						2.0			
EZS502B	121	10	7.8	10.9	8.16		1.5					1.2			
EZS503B	119	14.1	10.9	15.6	11.8		1.0	1.9	2.1				1.7	1.7	
EZS701B	95	9.35	9.5	10.2	10		1.2	2.2				1.0	2.0	2.0	
EZS702B	133	16.3	11.8	19	12.9			1.7	1.9				1.6	1.6	
EZS703B	122	23.7	18.2	27.7	20			1.1	1.3				1.0	1.0	

EZM synchronous servo motor for screw drive (driven threaded nut) (n_N = 3000 rpm) – SI6

						SI6A061 SI6A062	SI6A161 SI6A162	SI6A261	SI6A262	SI6A361	SI6A061 SI6A062	SI6A161 SI6A162	SI6A261	SI6A262	SI6A361
						$I_{2N,PU}$ [A] ($f_{PWM,PU}$ = 4 kHz)					$I_{2N,PU}$ [A] ($f_{PWM,PU}$ = 8 kHz)				
	K_{EM} [V/1000 rpm]	M_N [Nm]	I_N [A]	M_0 [Nm]	I_0 [A]	5	12	22	25	50	4.5	10	20	20	40
IC 410 convection cooling						$I_{2N,PU}$ / I_0									
EZM511U	97	3.65	3.55	4.25	4	1.3					1.1				
EZM512U	121	6.6	5.2	7.55	5.75		2.1					1.7			
EZM513U	119	8.8	6.55	10.6	7.6		1.6					1.3			
EZM711U	95	6.35	6.6	7.3	7.4		1.6					1.4			
EZM712U	133	10.6	7.5	13	8.9		1.3					1.1			
EZM713U	122	14.7	10.4	18.9	13			1.7	1.9				1.5	1.5	

3.4 Accessories

You can find information about the available accessories in the following chapters.

3.4.1 Safety technology

Information

The drive controller is delivered in the standard design without safety technology (option SZ6). If you want a drive controller with integrated safety technology, you must order it together with the drive controller. The safety modules are an integrated part of the drive controllers and must not be modified.

SZ6 option – Without safety technology

Included in the standard version.

ID No. 56660
Design without safety technology.

SR6 safety module – STO using terminals

ID No. 56661
Optional accessory for the use of the Safe Torque Off safety function (STO) in safety-relevant applications (PL e, SIL 3) in accordance with DIN EN ISO 13849-1 and DIN EN 61800-5-2. Connection to a higher-level safety circuit via terminal X12.

SY6 safety module – STO and SS1 using FSoE

ID No. 56662
Optional accessory for the use of the Safe Torque Off (STO) and Safe Stop 1 (SS1) safety functions in safety-relevant applications (PL e, SIL 3) in accordance with DIN EN ISO 13849-1 and DIN EN 61800-5-2. Connection to the higher-level safety circuit using Fail Safe over EtherCAT (FSoE).

3.4.2 Communication

The drive controller has two interfaces for the fieldbus connection on the top of the device as well as an Ethernet service interface on the front of the device. Cables for the connection are available separately.

EtherCAT or PROFINET fieldbus system

Please specify the desired fieldbus system when placing your purchase order for the base device, since the fieldbus communication is defined using the firmware.

EtherCAT cables

Ethernet patch cable, CAT5e, yellow.
The following designs are available:
ID No. 49313: Length approx. 0.2 m.
ID No. 49314: Length approx. 0.35 m.

PC connecting cables

ID No. 49857
Cable for connecting the X9 service interface to the PC, CAT5e, blue, 5 m.

USB 2.0 Ethernet adapter

ID No. 49940
Adapter for connecting Ethernet to a USB port.

3.4.3 Terminal set

For the connection, you need suitable terminal sets for each PS6 supply module and each SI6 drive controller.

Terminal set for supply module

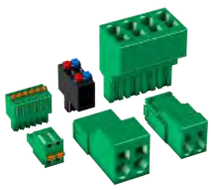

The following designs are available:
ID No. 138660
Terminal set for PS6A24.
ID No. 138661
Terminal set for PS6A34.

Terminal set for drive controller – SZ6 option (without safety technology) or SY6 option (STO and SS1 using FSoE)

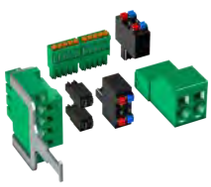

The following designs are available:
ID No. 138655
Terminal set for SI6A061Z/Y.
ID No. 138656
Terminal set for SI6A062Z/Y.
ID No. 138657
Terminal set for SI6A161Z/Y.
ID No. 138658
Terminal set for SI6A162Z/Y.
ID No. 138659
Terminal set for SI6A261Z/Y.
ID No. 138662
Terminal set for SI6A262Z/Y.
ID No. 138663
Terminal set for SI6A361Z/Y.

Terminal set for drive controller – SR6 option (STO via terminals)

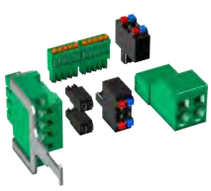

The following designs are available:
ID No. 138683
Terminal set for SI6A061R.
ID No. 138684
Terminal set for SI6A062R.
ID No. 138685
Terminal set for SI6A161R.
ID No. 138686
Terminal set for SI6A162R.
ID No. 138687
Terminal set for SI6A261R.
ID No. 138688
Terminal set for SI6A262R.
ID No. 138689
Terminal set for SI6A361R.

3.4.4 DC link connection

For the energy supply of the existing networked drive controllers, you need suitable Quick DC-Link modules of type DL6B for each PS6 supply module and each SI6 drive controller.

For the horizontal connection, you receive DL6B rear section modules in various designs, matched to the size of the drive controller or supply module.

The quick fastening clamps for attaching the copper rails and an insulation connection piece are contained in the scope of delivery. The copper rails are not included in the scope of delivery. These must have a cross-section of 5 x 12 mm. Insulation end sections are available separately.

Quick DC-Link DL6B for drive controller

The following designs are available:
DL6B10
ID No. 56655
Rear section module for size 0 drive controller:
SI6A061 and SI6A062
DL6B11
ID No. 56656
Rear section module for size 1 or 2 (single-axis controller) drive controller:
SI6A161, SI6A162 and SI6A261
DL6B12
ID No. 56663
Rear section module for size 2 (double-axis controller) or 3 drive controller:
SI6A262 and SI6A361

Quick DC-Link DL6B for supply module

The following designs are available:
DL6B20
ID No. 56657
Rear section module for size 2 supply module:
PS6A24
DL6B21
ID No. 56658
Rear section module for size 3 supply module:
PS6A34

Quick DC-Link DL6B insulation end section

ID No. 56659
Insulation end sections for the left and right termination of the group, 2 pcs.

3.4.5 Braking resistor

In addition to the supply modules, STOBER offers braking resistors in the various sizes and performance classes described below. For the selection, note the minimum permitted braking resistors specified in the technical data of the supply modules. In the event of a fault, such as a defective brake chopper, the supply module must be disconnected from the power supply.

3.4.5.1 Braking resistor assignment – PS6

Type	KWADQU	FZZMQU	FGFKQU
ID No.	56634	56635	56636
PS6A24	(—)	(X)	X
PS6A34	(—)	(X)	X

Tab. 42: Braking resistor assignment to PS6 supply module

X	Recommended
(X)	Possible
(—)	Useful under certain conditions

3.4.5.2 KWADQU flat resistor

Properties

Specification	KWADQU 420×91
ID No.	56634
Type	Flat resistor with temperature switch (incl. mounting bracket)
Resistance [Ω]	100
Power [W]	600
Thermal time constant τ_{th} [s]	60
Pulse power for < 1 s [kW]	13
U_{max} [V]	848
Cable design	FEP
Cable length [mm]	500
Conductor cross-section [AWG]	14/19 (1.9 mm²)
Weight without packaging [g]	2600
Protection class	IP54
Test symbols	c UL us CE

Tab. 43: KWADQU specification

Specification	Temperature switch
Switching capacity	2 A / 24 V_{DC} (DC11)
Nominal response temperature ϑ_{NAT}	180 °C ± 5 K
Type	NC
Cable design	FEP
Cable length [mm]	500
Conductor cross-section [AWG]	22

Tab. 44: Temperature switch specification

Dimensions

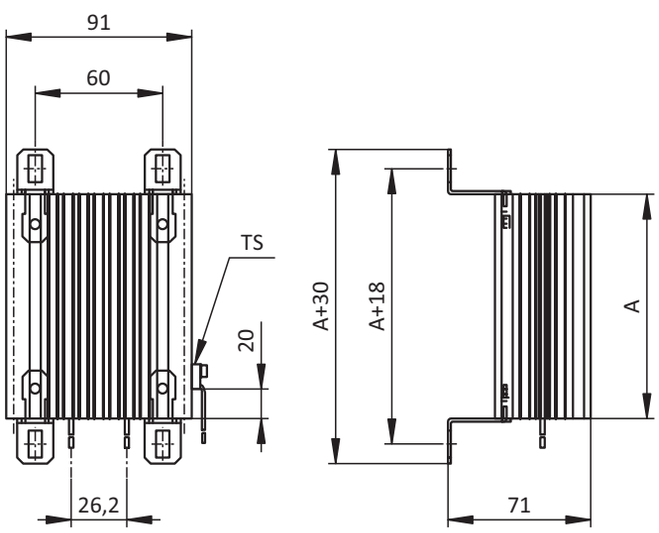

Fig. 6: KWADQU dimensional drawing

Dimension	KWADQU 420×91
A	420

Tab. 45: KWADQU dimensions [mm]

3.4.5.3 FZZMQU tubular fixed resistor

Properties

Specification	FZZMQU 400×65
ID No.	56635
Type	Tubular fixed resistor with temperature switch
Resistance [Ω]	47
Power [W]	1200
Thermal time constant τ_{th} [s]	40
Pulse power for < 1 s [kW]	36
U_{max} [V]	848
Weight without packaging [g]	4200
Protection class	IP20
Test symbols	c UL us CE

Tab. 46: FZZMQU specification

Specification	Temperature switch
Switching capacity	2 A / 24 V_{DC} (DC11)
Nominal response temperature ϑ_{NAT}	180 °C ± 5 K
Type	NC
Cable design	FEP
Cable length [mm]	500
Conductor cross-section [AWG]	22

Tab. 47: Temperature switch specification

Dimensions

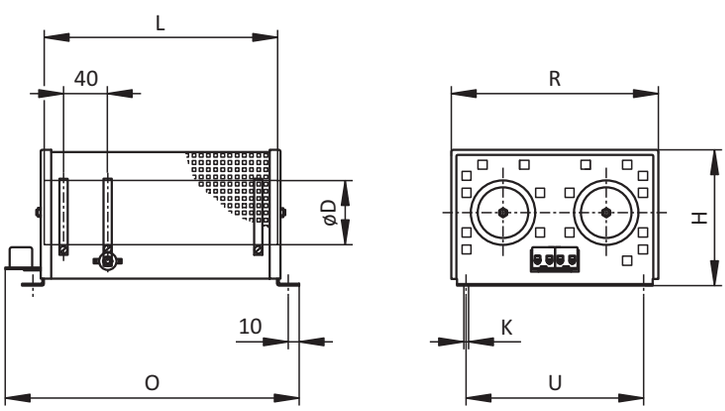

Fig. 7: FZZMQU dimensional drawing

Dimension	FZZMQU 400×65
L × D	400 × 65
H	120
K	6.5 × 12
O	485
R	185
U	150

Tab. 48: FZZMQU dimensions [mm]

3.4.5.4 FGFKQU steel-grid fixed resistor

Properties

Specification	FGFKQU 31005
ID No.	56636
Type	Steel-grid fixed resistor with temperature switch
Resistance [Ω]	22
Power [W]	2500
Thermal time constant τ_{th} [s]	30
Pulse power for < 1 s [kW]	50
U_{max} [V]	848
Weight without packaging [g]	7500
Protection class	IP20
Test symbols	c UL us CE

Tab. 49: FGFKQU specification

Specification	Temperature switch
Switching capacity	2 A / 24 V_{DC} (DC11)
Nominal response temperature ϑ_{NAT}	180 °C ± 5 K
Type	NC
Cable design	FEP
Cable length [mm]	500
Conductor cross-section [AWG]	22

Tab. 50: Temperature switch specification

Dimensions

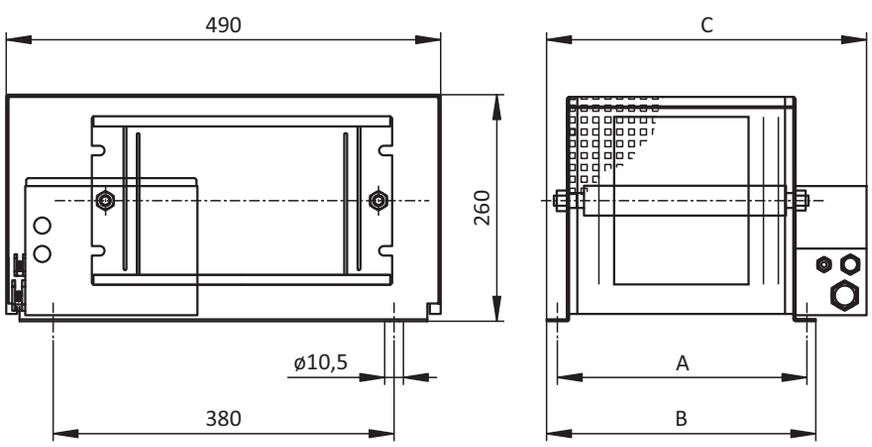

Fig. 8: FGFKQU dimensional drawing

Dimension	FGFKQU 31005
A	270
B	295
C	355

Tab. 51: FGFKQU dimensions [mm]

3.4.6 Choke

Technical specifications for suitable chokes can be found in the following chapters.

3.4.6.1 TEP power choke

Power chokes are used to dampen voltage and current peaks and reduce the load of the power feed-in of the supply modules.

Properties

Specification	TEP4010-2US00
ID No.	56528
Phases	3
Thermally allowed continuous current	100 A
Nominal current $I_{N,MF}$	90 A
Absolute loss P_V	103 W
Inductance	0.14 mH
Voltage range	3 × 400 V_{AC}, +32%/−50% 3 × 480 V_{AC}, +10%/−58%
Voltage drop U_k	2%
Frequency range	50/60 Hz
Protection class	IP00
Max. surrounding temperature $\vartheta_{amb,max}$	40 °C
Insulation class	B
Connection	Screw terminal
Connection type	Flexible with and without end sleeve
Max. conductor cross-section	6 – 35 mm²
Tightening torque	2.5 Nm
Insulation stripping length	17 mm
Installation	Screws
Directive	EN 61558-2-20
UL Recognized Component (CAN; USA)	Yes
Test symbol, symbol	c US CE

Tab. 52: TEP specification

Dimensions

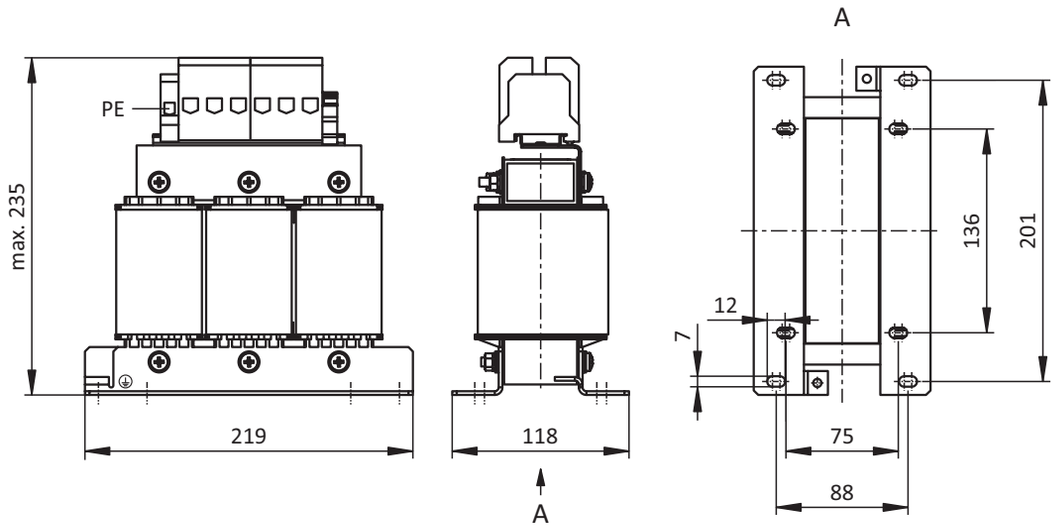

Fig. 9: Power choke dimensional drawing

Dimensions	TEP4010-2US00
Height [mm]	235
Width [mm]	219
Depth [mm]	118
Vertical distance 1 – fastening holes [mm]	201
Vertical distance 2 – Fastening holes [mm]	136
Horizontal distance 1 – fastening holes [mm]	88
Horizontal distance 2 – Fastening holes [mm]	75
Drill holes – Depth [mm]	7
Drill holes – Width [mm]	12
Screw connection – M	M6
Weight without packaging [g]	9900

Tab. 53: TEP dimensions and weight

3.4.6.2 TEP output choke

Output chokes are required for connecting size 0 to 2 drive controllers to synchronous servo motors or asynchronous motors from a cable length > 50 m in order to reduce interference pulses and protect the drive system. If Lean motors are connected, output chokes must not be used.

Information

The following technical data only applies to a rotating magnetic field frequency of 200 Hz. For example, this rotating magnetic field frequency is achieved with a motor with 4 pole pairs and a nominal speed of 3000 rpm. Always observe the specified derating for higher rotating magnetic field frequencies. Also observe the relationship with the clock frequency.

Properties

Specification	TEP3720-0ES41	TEP3820-0CS41	TEP4020-0RS41
ID No.	53188	53189	53190
Voltage range	3 × 0 to 480 V_{AC}		
Frequency range	0 – 200 Hz		
Nominal current $I_{N,MF}$ at 4 kHz	4 A	17.5 A	38 A
Nominal current $I_{N,MF}$ at 8 kHz	3.3 A	15.2 A	30.4 A
Max. permitted motor cable length with output choke	100 m		
Max. surrounding temperature $\vartheta_{amb,max}$	40 °C		
Protection class	IP00		
Winding losses	11 W	29 W	61 W
Iron losses	25 W	16 W	33 W
Connection	Screw terminal		
Max. conductor cross-section	10 mm²		
UL Recognized Component (CAN; USA)	Yes		
Test symbols	c UL us CE		

Tab. 54: TEP specification

Dimensions

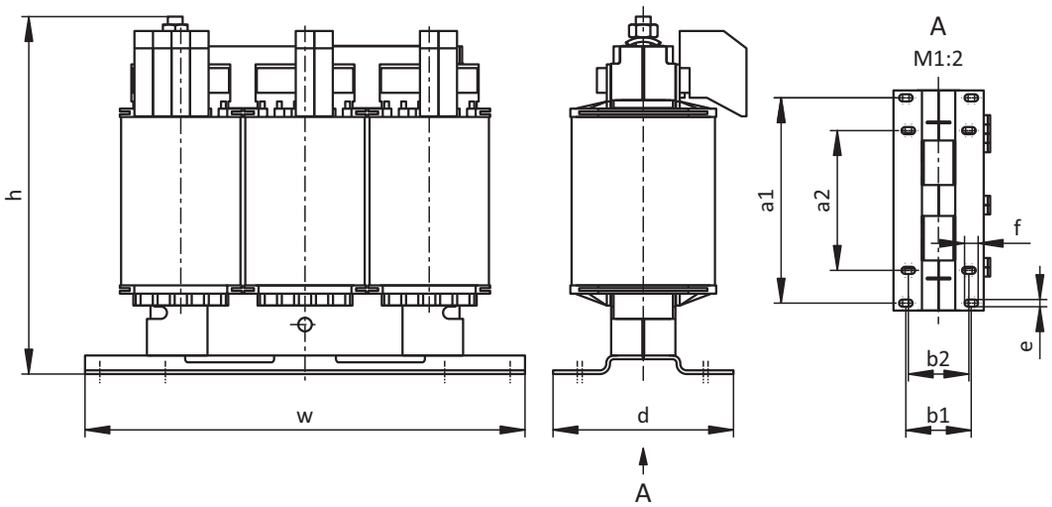

Fig. 10: TEP dimensional drawing

Dimension	TEP3720-0ES41	TEP3820-0CS41	TEP4020-0RS41
Height h [mm]	Max. 153	Max. 153	Max. 180
Width w [mm]	178	178	219
Depth d [mm]	73	88	119
Vertical distance – Fastening holes a1 [mm]	166	166	201
Vertical distance – Fastening holes a2 [mm]	113	113	136
Horizontal distance – Fastening holes b1 [mm]	53	68	89
Horizontal distance – Fastening holes b2 [mm]	49	64	76
Drill holes – Depth e [mm]	5.8	5.8	7
Drill holes – Width f [mm]	11	11	13
Screw connection – M	M5	M5	M6
Weight without packaging [g]	2900	5900	8800

Tab. 55: TEP dimensions and weight

3.4.7 Encoder battery module

Absolute Encoder Support AES

ID No. 55452
Battery module for buffering the supply voltage when using the EnDat 2.2 digital inductive encoder with battery-buffered multi-turn stage, for example EBI1135 or EBI135.
A battery is included.

Information

Note that a 15-pin extension cable between the socket and the AES may be necessary for the connection to the drive controller due to limited space.

a) A commercially available shielded extension cable with a 15-pin D-sub connector and a length of ≤ 1 m can be used between the socket and the AES.

AES replacement battery

ID No. 55453
Replacement battery for AES battery module.

3.4.8 HTL-to-TTL adapter

HT6 HTL-to-TTL adapter

ID No. 56665
Adapters for SC6 and SI6 series drive controllers for level conversion from HTL signals to TTL signals.
It is used to connect an HTL differential incremental encoder to terminal X4 of the drive controller.

3.5 Further information

3.5.1 Directives and standards

The following European directives and standards are relevant to the drive controllers:

- Machinery Directive 2006/42/EC
- Low Voltage Directive 2014/35/EU
- EMC Directive 2014/30/EU
- EN 61326-3-1:2008
- EN 61800-3:2004 and A1:2012
- EN 61800-5-1:2007
- EN 61800-5-2:2007
- EN 50178:1997
- IEC 61784-3:2010

3.5.2 Symbols, marks and test symbols

Grounding symbol
Grounding symbol in accordance with IEC 60417, symbol 5019.

RoHS lead-free mark
Marking in accordance with RoHS directive 2011-65-EU.

CE mark
Manufacturer's self declaration: The product meets the requirements of EU directives.

UL test symbol
This product is listed by UL for the United States and Canada. Representative samples of this product have been evaluated by UL and meet the requirements of applicable standards.

UL recognized component mark
This component or material is recognized by UL. Representative samples of this product have been evaluated by UL and meet applicable requirements.

3.5.3 Additional documentation

Additional documentation related to the product can be found at
http://www.stoeber.de/en/downloads/

Enter the ID of the documentation in the Search... field.

Documentation	ID
Manual for SI6 drive controllers	442728

4 SD6 drive controllers

Table of contents

4.1 Overview 84

4.1.1 Features 85

4.1.2 Software components 87

4.1.3 Application training 87

4.2 Technical data 88

4.2.1 Type designation 88

4.2.2 Sizes 88

4.2.3 General technical data 89

4.2.4 Electrical data 90

4.2.5 Derating 95

4.2.6 Dimensions 97

4.2.7 Weight 99

4.2.8 Minimum clearances 100

4.3 Drive controller/motor combinations 101

4.4 Accessories 104

4.4.1 Safety technology 104

4.4.2 Communication 104

4.4.3 Terminal module 106

4.4.4 DC link connection 108

4.4.5 Braking resistor 109

4.4.6 Choke 115

4.4.7 EMC shroud 119

4.4.8 Encoder adapter box 119

4.4.9 Encoder battery module 120

4.4.10 Removable data storage 120

4.5 Further information 121

4.5.1 Directives and standards 121

4.5.2 Symbols, marks and test symbols 121

4.5.3 Additional documentation 121

4 Drive controllers

SD6

4.1 Overview

High performance and flexibility

Features

- Nominal output current up to 85 A
- 250% overload capacity
- Control of linear and rotary synchronous servo motors and asynchronous motors
- Multi-functional encoder interfaces
- Automatic motor parameterization from the electronic motor nameplate
- Isochronic system bus (IGB motion bus) for parameterization and multi-axis applications
- Communication over CANopen, EtherCAT or PROFINET
- Safe Torque Off (STO) in the standard version, expanded safety technology (SS1, SS2, SLS, etc.) as an option
- Digital and analog inputs and outputs as an option
- Brake chopper, brake control and line filter
- Energy supply through direct power supply
- Flexible DC link connection for multi-axis applications
- Convenient operating unit consisting of graphical display and keys
- Paramodul removable data storage for quick commissioning and service

4.1.1 Features

STOBER drive controllers of the SD6 series offer maximum precision and productivity for automation technology and mechanical engineering despite ever more complex functions. Highly dynamic drives ensure the shortest recovery times from fast changes in set value and load jumps. There is also an option of connecting the drive controllers in a DC link for multi-axis applications, which improves the energy footprint of the entire system. The SD6 drive controller is available in four sizes with a nominal output current of up to 85 A.

For STOBER synchronous servo motors, we recommended operation with the EnDat 2.1/2.2 digital encoder or as a One Cable Solution with EnDat 3. These encoder systems make it possible to attain the highest control quality. It is possible to perform motor parameterization automatically from the electronic motor nameplate.

SD6 drive controller

32-bit Dual-Core

The control unit of the SD6 with a 32-bit dual-core processor opens up new dimensions in terms of precise movements and dynamics. The position, speed and torque control of the servo axes are calculated at a cycle time of 62.5 µs (16 kHz). This ensures the shortest recovery times from fast changes in set values and load jumps.

Fully electronic STO as a standard feature

There is already a wear-free, fully electronic interface for the Safe Torque Off (STO) safety function available in the standard series version. The solution is a technical innovation that works without any system tests disrupting operation. In practical terms, this means an impressive increase in the availability of machines and systems. Time-consuming planning and documentation of tests are also eliminated. In multi-axis applications with SD6 drive controllers, the STO safety function can simply be looped through. The safety-relevant functions were developed together with Pilz GmbH & Co. KG.

Expanded safety option

In addition to the safe stop functions Safe Stop 1 (SS1) and Safe Stop 2 (SS2), additional safety functions such as Safely-Limited Speed (SLS), Safe Brake Control (SBC), Safe Brake Test (SBT), Safe Direction (SDI) and Safely-Limited Increment (SLI) are also available.

Certified safety

TÜV certification makes it possible to use SD6 drive controllers even in applications with challenging safety requirements:

- SIL 3, HFT 1 in accordance with EN 61800-5-2
- PL e, category 4 in accordance with DIN EN ISO 13849

Quick DC-Link

All the product types of the SD6 drive controller have the option of a DC link connection. This technology makes it possible for the regenerative production of energy from one drive to be used as motor energy by another drive. The Quick DC-Link rear structure element has been developed to set up a reliable and efficient rail connection to the DC link connection. This optionally available accessory connects the DC links of the individual drive controllers by means of copper rails that can carry a load of up to 200 A. The rails can be attached without any tools using quick fastening clamps.

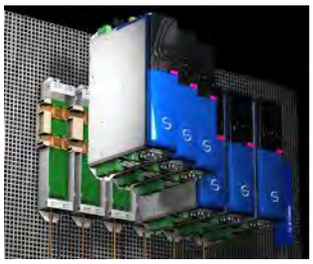

Paramodul removable data storage

Removable data storage with integrated microSD card is available for fast series commissioning by copying and for easy service when replacing devices. It represents the ideal medium for saving additional project data and documentation and can be used for direct editing on a PC.

Integrated bus (IGB)

SD6 drive controllers have two interfaces for the integrated bus in the standard version. The integrated bus is used for easy configuration over Ethernet and isochronic data exchange for the following functions:

- Multi-axis synchronization between the drive controllers (IGB motion bus)
- Direct connection for remote maintenance of individual and multiple drive controllers
- Direct connection between one or more drive controllers and a PC

Interface for the Integrated Bus

IGB motion bus

The IGB motion bus allows for cyclic, isochronic data exchange between multiple SD6 drive controllers integrated into the IGB network. In addition to transferring guide values for master/slave operation, it is possible to exchange any other data as well.

STOBER remote maintenance concept

STOBER remote maintenance enables commissioning software to be used to perform all processes and sequences just like an on-site service visit. The concept guides users through a controlled and protected procedure. It ensures that the person responsible for the machine is there on site to pay attention to special situations and personal safety. On the other end, the remote maintenance specialist has the assurance of communicating with a responsible employee on site who is monitoring the situation on the machine.

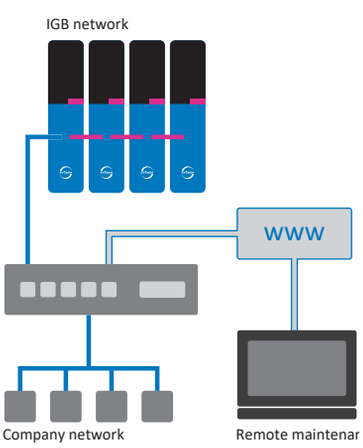

Remote maintenance enables all processes and sequences to be performed just like an on-site service visit.

Brake management

The SD6 drive controller can activate a 24 V_{DC} brake using an integrated brake control. Brake management provides two functions for the brake system:

- Cyclic brake test
- Bed in brake

4.1.2 Software components

Project configuration and commissioning

The 6th generation of DriveControlSuite project configuration and commissioning software has all the functions for the efficient use of drive controllers in single-axis and multi-axis applications. The program guides you step by step through the complete project configuration and parameterization process using wizards.

Open communication

Device communication is possible using EtherCAT, CANopen or PROFINET.

Applications

Drive-based motion control is recommended for the decentralized motion control of sophisticated machines.

The drive-based application package from STOBER is the right choice wherever universal and flexible solutions are needed. The Drive Based Synchronous application provides drive-based motion control for synchronous operation, positioning, velocity and torque/force with the PLCopen Motion Control command set. These standard commands have been combined into operating modes for different application cases and supplemented with additional functions such as motion block linking or cams. For the command operating mode, all properties of the movements are specified directly by the controller. The properties of the movements in the drive are predefined in the motion block operating mode so that only a start signal is necessary to perform the movement. Linking can be used to define complete motion sequences.

In addition, the CiA 402 application is also available, which includes both the controller-based and drive-based operating modes (csp, csv, cst, ip, pp, pv, pt).

4.1.3 Application training

STOBER offers a multi-level training program that is essentially focused on the drive controller.

G6 Basic

Training content: System overview, installation and commissioning of the drive controller. Use of option modules. Parameterization, commissioning and diagnostics using the commissioning software. Remote maintenance. Basics of controller optimization. Configuration of the drive train. Integrated software functions. Software applications. Connection to a higher-level controller. Basics of safety technology. Practical exercises on training topics.

Software used: DriveControlSuite.

G6 Customized

Training content: Special knowledge for regulating, control and safety technology. Electronic cam disk. Practical exercises on training topics.

4.2 Technical data

Technical data for the drive controller can be found in the following chapters.

4.2.1 Type designation

SD	6	A	0	6	T	E	X

Tab. 1: Example code for type designation

Code	Designation	Design
SD	Series	ServoDrive
6	Generation	Generation 6
A, B	Version	
0 – 3	Size	
6 (0 – 9)	Power output stage	Power output stage within the size
T E	Safety module	ST6: STO via terminals SE6: Expanded safety functionality via terminals
N **E** C P	Communication module	Empty EC6: EtherCAT CA6: CANopen PN6: PROFINET
N **X** R I	Terminal module	Empty XI6: Extended RI6: Resolver IO6: Standard

Tab. 2: Meaning of the example code

4.2.2 Sizes

Type	Size
SD6A02	Size 0
SD6A04	Size 0
SD6A06	Size 0
SD6A14	Size 1
SD6A16	Size 1
SD6A24	Size 2
SD6A26	Size 2
SD6A34	Size 3
SD6A36	Size 3
SD6A38	Size 3

Tab. 3: Available SD6 types and sizes

SD6 in sizes 0, 1, 2 and 3

4.2.3 General technical data

The following information applies to all device types.

Device features	
Protection class of the device	IP20
Protection class of the installation space	At least IP54
Protection class	Protection class I in accordance with DIN EN 61140
Radio interference suppression	Integrated line filter in accordance with DIN EN 61800-3, interference emission class C3
Overvoltage category	III in accordance with DIN EN 61800-5-1
Test symbols	

Tab. 4: Device features

Transport and storage conditions	
Storage/ transport temperature	−20 °C to +70 °C Maximum change: 20 K/h
Relative humidity	Maximum relative humidity 85%, non-condensing
Vibration (transport) in accordance with DIN EN 60068-2-6	5 Hz ≤ f ≤ 9 Hz: 3.5 mm 9 Hz ≤ f ≤ 200 Hz: 10 m/s² 200 Hz ≤ f ≤ 500 Hz: 15 m/s²
Fall height for freefall[1] Weight < 100 kg in accordance with DIN EN 61800-2 (or DIN EN 60721-3-2:1997, class 2M1)	0.25 m

Tab. 5: Transport and storage conditions

Operating conditions	
Surrounding temperature during operation	0 °C to 45 °C with nominal data 45 °C to 55 °C with derating −2.5% / K
Relative humidity	Maximum relative humidity 85%, non-condensing
Installation altitude	0 m to 1000 m above sea level without restrictions 1000 m to 2000 m above sea level with −1.5%/100 m derating
Pollution degree	Pollution degree 2 in accordance with EN 50178
Ventilation	Installed fan
Vibration (operation) in accordance with DIN EN 60068-2-6	5 Hz ≤ f ≤ 9 Hz: 0.35 mm 9 Hz ≤ f ≤ 200 Hz: 1 m/s²

Tab. 6: Operating conditions

Discharge times	
Self-discharge of DC link	6 min

Tab. 7: Discharge times of the DC link circuit

[1] Only valid for components in original packaging

4.2.4 Electrical data

The electrical data of the available SD6 sizes as well as the properties of the brake chopper can be found in the following chapters.

Information

For the time span between energizing two devices, note that:

a) Direct, repeat activation of the supply voltage is possible for cyclical power-on/power-off operation.

Information

The STO safety function is available for safe stopping as an alternative to continuous, cyclical power-on/power-off operation.

An explanation of the symbols used for formulas can be found in Chapter [▸ 12.1].

4.2.4.1 Control unit

Electrical data	All types
U_{1CU}	24 V_{DC}, +20%/−15%
I_{1maxCU}	1.5 A

Tab. 8: Control unit electrical data

4.2.4.2 Power unit: Size 0

Electrical data	SD6A02	SD6A04	SD6A06
U_{1PU}	1 × 230 V_{AC}, +20% / −40%, 50/60 Hz	3 × 400 V_{AC}, +32% / −50%, 50/60 Hz; 3 × 480 V_{AC}, +10% / −58%, 50/60 Hz	
f_{2PU}	0 – 700 Hz		
U_{2PU}	0 – max. U_{1PU}		
C_{PU}	340 µF	135 µF	135 µF
$C_{N,PU}$	1620 µF	540 µF	540 µF

Tab. 9: SD6 electrical data, size 0

Nominal currents up to +45 °C (in the control cabinet)

Electrical data	SD6A02	SD6A04	SD6A06
$f_{PWM,PU}$	4 kHz		
$I_{1N,PU}$	8.3 A	2.8 A	5.4 A
$I_{2N,PU}$	4 A	2.3 A	4.5 A
I_{2maxPU}	180% for 5 s; 150% for 30 s		

Tab. 10: SD6 electrical data, size 0, for 4 kHz clock frequency

Electrical data	SD6A02	SD6A04	SD6A06
$f_{PWM,PU}$	8 kHz		
$I_{1N,PU}$	6 A	2.2 A	4 A
$I_{2N,PU}$	3 A	1.7 A	3.4 A
I_{2maxPU}	250% for 2 s; 200% for 5 s		

Tab. 11: SD6 electrical data, size 0, for 8 kHz clock frequency

Electrical data	SD6A02	SD6A04	SD6A06
U_{onCH}	400 – 420 V_{DC}	780 – 800 V_{DC}	
U_{offCH}	360 – 380 V_{DC}	740 – 760 V_{DC}	
R_{2minRB}	100 Ω		
P_{maxRB}	1.8 kW	6.4 kW	
P_{effRB}	1.0 kW	2.9 kW	

Tab. 12: Brake chopper electrical data, size 0

4.2.4.3 Power unit: Size 1

Electrical data	SD6A14	SD6A16
U_{1PU}	3 × 400 V_{AC}, +32% / −50%, 50/60 Hz; 3 × 480 V_{AC}, +10% / −58%, 50/60 Hz	
f_{2PU}	0 – 700 Hz	
U_{2PU}	0 – max. U_{1PU}	
C_{PU}	470 µF	560 µF
$C_{N,PU}$	1400 µF	1400 µF

Tab. 13: SD6 electrical data, size 1

Nominal currents up to +45 °C (in the control cabinet)

Electrical data	SD6A14	SD6A16
$f_{PWM,PU}$	4 kHz	
$I_{1N,PU}$	12 A	19.2 A
$I_{2N,PU}$	10 A	16 A
I_{2maxPU}	180% for 5 s; 150% for 30 s	

Tab. 14: SD6 electrical data, size 1, for 4 kHz clock frequency

Electrical data	SD6A14	SD6A16
$f_{PWM,PU}$	8 kHz	
$I_{1N,PU}$	9.3 A	15.8 A
$I_{2N,PU}$	6 A	10 A
I_{2maxPU}	250% for 2 s; 200% for 5 s	

Tab. 15: SD6 electrical data, size 1, for 8 kHz clock frequency

Electrical data	SD6A14	SD6A16
U_{onCH}	780 – 800 V_{DC}	
U_{offCH}	740 – 760 V_{DC}	
R_{2minRB}	47 Ω	
P_{maxRB}	13.6 kW	
P_{effRB}	6.2 kW	

Tab. 16: Brake chopper electrical data, size 1

4.2.4.4 Power unit: Size 2

Electrical data	SD6A24	SD6A26
U_{1PU}	3 × 400 V_{AC}, +32% / −50%, 50/60 Hz; 3 × 480 V_{AC}, +10% / −58%, 50/60 Hz	
f_{2PU}	0 – 700 Hz	
U_{2PU}	0 – max. U_{1PU}	
C_{PU}	680 µF	1000 µF
$C_{N,PU}$	1400 µF	1400 µF

Tab. 17: SD6 electrical data, size 2

Nominal currents up to +45 °C (in the control cabinet)

Electrical data	SD6A24	SD6A26
$f_{PWM,PU}$	4 kHz	
$I_{1N,PU}$	26.4 A	38.4 A
$I_{2N,PU}$	22 A	32 A
I_{2maxPU}	180% for 5 s; 150% for 30 s	

Tab. 18: SD6 electrical data, size 2, for 4 kHz clock frequency

Electrical data	SD6A24	SD6A26
$f_{PWM,PU}$	8 kHz	
$I_{1N,PU}$	24.5 A	32.6 A
$I_{2N,PU}$	14 A	20 A
I_{2maxPU}	250% for 2 s; 200% for 5 s	

Tab. 19: SD6 electrical data, size 2, for 8 kHz clock frequency

Electrical data	SD6A24	SD6A26
U_{onCH}	780 – 800 V_{DC}	
U_{offCH}	740 – 760 V_{DC}	
R_{2minRB}	22 Ω	
P_{maxRB}	29.1 kW	
P_{effRB}	13.2 kW	

Tab. 20: Brake chopper electrical data, size 2

4.2.4.5 Power unit: Size 3

Electrical data	SD6A34	SD6A36	SD6A38
U_{1PU}	3 × 400 V_{AC}, +32% / −50%, 50/60 Hz; 3 × 480 V_{AC}, +10% / −58%, 50/60 Hz		
f_{2PU}	0 – 700 Hz		
U_{2PU}	0 – max. U_{1PU}		
C_{PU}	430 µF	900 µF	900 µF
$C_{N,PU}$	5100 µF	5100 µF	5100 µF

Tab. 21: SD6 electrical data, size 3

Nominal currents up to +45 °C (in the control cabinet)

Electrical data	SD6A34	SD6A36	SD6A38
$f_{PWM,PU}$	4 kHz		
$I_{1N,PU}$	45.3 A	76 A	76 A
$I_{2N,PU}$	44 A	70 A	85 A[2]
I_{2maxPU}	180% for 5 s; 150% for 30 s		

Tab. 22: SD6 electrical data, size 3, for 4 kHz clock frequency

Electrical data	SD6A34	SD6A36	SD6A38
$f_{PWM,PU}$	8 kHz		
$I_{1N,PU}$	37 A	62 A	76 A
$I_{2N,PU}$	30 A	50 A	60 A
I_{2maxPU}	250% for 2 s; 200% for 5 s		

Tab. 23: SD6 electrical data, size 3, for 8 kHz clock frequency

Electrical data	SD6A34	SD6A36	SD6A38
U_{onCH}	780 – 800 V_{DC}		
U_{offCH}	740 – 760 V_{DC}		
R_{intRB}	30 Ω (PTC resistance; 100 W; max. 1 kW for 1 s; τ = 40 s)		
R_{2minRB}	15 Ω		
P_{maxRB}	42 kW		
P_{effRB}	19.4 kW		

Tab. 24: Brake chopper electrical data, size 3

4.2.4.6 Parallel connection

The charging capacity of the driver controllers can be increased by a parallel connection only if the power grid supply is connected to all drive controllers simultaneously.

[2] Specification applies to the default setting of the field weakening voltage limit: B92 = 80%.

4.2.4.7 Power loss data in accordance with EN 61800-9-2

Type	Nominal current $I_{2N,PU}$	Apparent power	Absolute losses $P_{V,CU}$[3]	Operating points[4]								IE class[5]	Comparison[6]
				(0/25)	(0/50)	(0/100)	(50/25)	(50/50)	(50/100)	(90/50)	(90/100)		
				Relative losses									
	[A]	[kVA]	[W]	[%]									
SD6A02	4	0.9	10	5.01	5.07	5.68	5.20	5.37	6.30	5.88	7.43	IE2	
SD6A04	2.3	1.6	10	2.98	3.13	3.49	3.02	3.22	3.71	3.36	4.09	IE2	
SD6A06	4.5	3.1	12	1.71	1.86	2.24	1.75	1.97	2.51	2.16	3.04	IE2	
SD6A14	10	6.9	12	1.38	1.54	1.93	1.43	1.64	2.17	1.80	2.57	IE2	
SD6A16	16	11.1	12	0.95	1.12	1.66	0.99	1.23	1.98	1.41	2.52	IE2	
SD6A24	22	15.2	15	0.80	0.97	1.49	0.84	1.06	1.75	1.21	2.19	IE2	
SD6A26	32	22.2	15	0.70	0.87	1.40	0.74	0.97	1.67	1.11	2.10	IE2	
SD6A34	44	30.5	35	0.61	0.76	1.21	0.68	0.90	1.53	1.06	1.96	IE2	
SD6A36	70	48.5	35	0.53	0.69	1.18	0.59	0.82	1.49	0.97	1.89	IE2	
SD6A38	85	58.9	35	0.47	0.64	1.18	0.54	0.78	1.50	0.94	1.94	IE2	
				Absolute losses P_V									
	[A]	[kVA]	[W]	[W]									[%]
SD6A02	4	0.9	10	45.1	45.6	51.1	46.8	48.3	56.7	52.9	66.9	IE2	51.8
SD6A04	2.3	1.6	10	47.7	50.1	55.8	48.3	51.5	59.3	53.8	65.4	IE2	40.2
SD6A06	4.5	3.1	12	52.9	57.6	69.3	54.4	61.0	77.9	67.1	94.1	IE2	39.6
SD6A14	10	6.9	12	95.3	106.1	133.3	98.6	113.2	149.9	123.9	177.0	IE2	37.1
SD6A16	16	11.1	12	104.9	124.0	184.6	110.3	136.6	219.8	156.0	279.8	IE2	35.8
SD6A24	22	15.2	15	121.5	146.9	226.1	128.1	161.6	266.0	183.7	332.7	IE2	32.9
SD6A26	32	22.2	15	154.7	192.8	311.3	164.7	214.9	370.5	246.9	465.9	IE2	38.6
SD6A34	44	30.5	35	187.5	232.2	368.7	207.7	273.9	466.8	323.0	597.8	IE2	32.1
SD6A36	70	48.5	35	256.6	332.3	570.8	287.9	397.0	721.5	471.0	915.9	IE2	33.9
SD6A38	85	58.9	35	277.8	376.9	692.3	317.4	459.0	886.1	554.6	1143.1	IE2	35.3

Tab. 25: Power loss data of the SD6 drive controller in accordance with EN 61800-9-2

General conditions

The loss data applies to drive controllers without any accessories.

The power loss calculation is based on a three-phase supply voltage with 400 V_{AC}/50 Hz.

The calculated data includes a supplement of 10% in accordance with EN 61800-9-2.

The power loss specifications refer to a clock frequency of 4 kHz.

The absolute losses for a power unit that is switched off refer to the 24 V_{DC} power supply of the control electronics.

[3] Absolute losses for a power unit that is switched off

[4] Operating points for relative motor stator frequency in % and relative torque current in %

[5] IE class in accordance with EN 61800-9-2

[6] Comparison of the losses for the reference related to IE2 in the nominal point (90, 100)

4.2.4.8 Power loss data of accessories

If you intend to order the drive controller with accessory parts, losses increase as follows:

Type	Absolute losses P_V [W]
SE6 safety module	< 4
ST6 safety module	1
IO6 terminal module	< 2
XI6 terminal module	< 5
RI6 terminal module	< 5
CA6 communication module	1
EC6 communication module	< 2
PN6 communication module	< 4

Tab. 26: Absolute losses of the accessories

Information

Note the absolute power loss of the encoder (usually < 3 W) and of the brake when designing as well.

Loss specifications for other optional accessories can be found in the technical data of the respective accessory part.

4.2.5 Derating

When dimensioning the drive controller, observe the derating of the nominal output current as a function of the clock frequency, surrounding temperature and installation altitude. There is no restriction for a surrounding temperature from 0 °C to 45 °C and an installation altitude of 0 m to 1000 m. The details given below apply to values outside these ranges.

4.2.5.1 Effect of the clock frequency

Changing the clock frequency f_{PWM} affects the amount of noise produced by the drive, among other things. However, increasing the clock frequency results in increased losses. During project configuration, define the highest clock frequency and use it to determine the nominal output current $I_{2N,PU}$ for dimensioning the drive controller.

Type	$I_{2N,PU}$ 4 kHz	$I_{2N,PU}$ 8 kHz	$I_{2N,PU}$ 16 kHz
SD6A02	4 A	3 A	2 A
SD6A04	2.3 A	1.7 A	1.1 A
SD6A06	4.5 A	3.4 A	2.3 A
SD6A14	10 A	6 A	4 A
SD6A16	16 A	10 A	5.7 A
SD6A24	22 A	14 A	8.1 A
SD6A26	32 A	20 A	12 A
SD6A34	44 A	30 A	18 A
SD6A36	70 A	50 A	31 A
SD6A38	85 A[7]	60 A	37.8 A

Tab. 27: Nominal output current $I_{2N,PU}$ dependent on the clock frequency

[7] Specification applies to the default setting of the field weakening voltage limit: B92 = 80 %.

4.2.5.2 Effect of the installation altitude

Derating as a function of the installation altitude is determined as follows:

- 0 m to 1000 m: No restriction (D_{IA} = 100%)
- 1000 m to 2000 m: Derating −1.5%/100 m

Example

The drive controller needs to be installed at an altitude of 1500 m above sea level.

The derating factor D_{IA} is calculated as follows:
D_{IA} = 100% − 5 × 1.5% = 92.5%

4.2.5.3 Effect of the surrounding temperature

Derating as a function of the surrounding temperature is determined as follows:

- 0 °C to 45 °C: No restrictions (D_T = 100%)
- 45 °C to 55 °C: Derating −2.5%/K

Example

The drive controller needs to be operated at 50 °C.

The derating factor D_T is calculated as follows
D_T= 100% − 5 × 2.5% = 87.5%

4.2.5.4 Calculating the derating

Follow these steps for the calculation:

1. Determine the highest clock frequency (f_{PWM}) that will be used during operation and use it to determine the nominal current $I_{2N,PU}$.
2. Determine the derating factors for installation altitude and surrounding temperature.
3. Calculate the reduced nominal current $I_{2N,PU(red)}$ in accordance with the following formula:
   $I_{2N,PU(red)} = I_{2N,PU} \times D_T \times D_{IA}$

Example

A drive controller of type SD6A06 needs to be operated at a clock frequency of 8 kHz at an altitude of 1500 m above sea level and a surrounding temperature of 50 °C.

The nominal current of the SD6A06 at 8 kHz is 3.4 A. The derating factor D_T is calculated as follows:
D_T = 100% − 5 × 2.5% = 87.5%

The derating factor D_{IA} is calculated as follows:
D_{IA} = 100% − 5 × 1.5% = 92.5%

The output current of importance for the project configuration is:
$I_{2N,PU(red)}$ = 3.4 A × 0.875 × 0.925 = 2.75 A

4.2.6 Dimensions

The dimensions of the available SD6 sizes can be found in the following chapters.

4.2.6.1 Dimensions: sizes 0 to 2

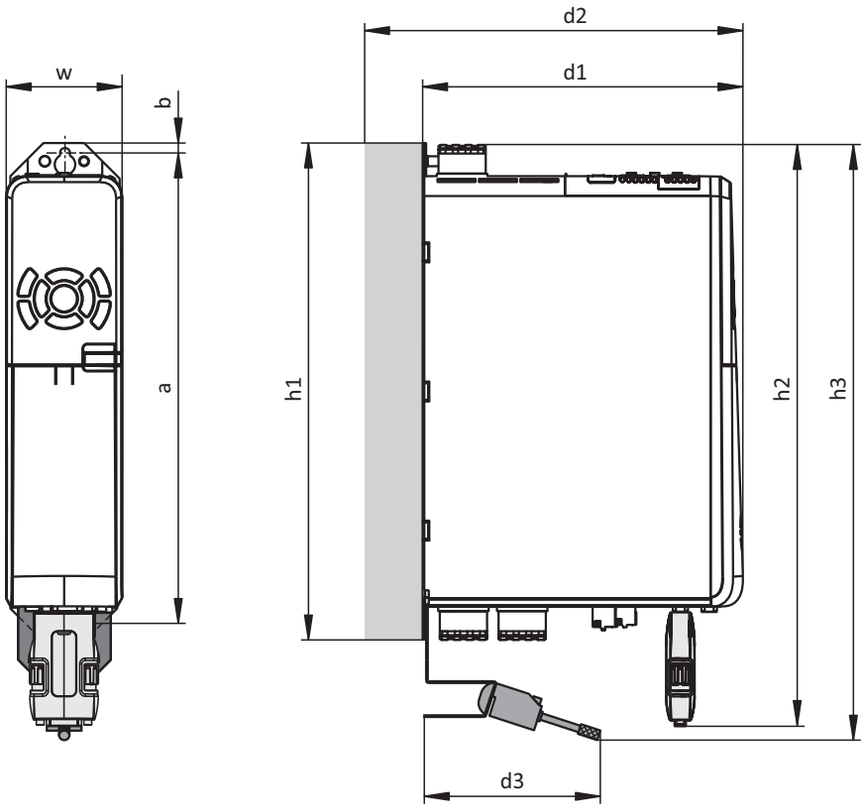

Fig. 1: SD6 dimensional drawing, sizes 0 to 2

Dimension			Size 0	Size 1	Size 2
Drive controller	Width	w	70	70	105
	Depth	d1	194	284	
	Depth incl. RB 5000 braking resistor	d2	212	302	
	Depth incl. Quick DC-Link	d2	229	319	
	Height incl. fastening clips	h1	300		
	Height incl. AES	h2	367		
	Height incl. EMC shroud	h3	approx. 376		
EMC shroud incl. shield connection terminal	Depth	d3	approx. 111		
Fastening holes	Vertical distance	a	283+2		
	Vertical distance to the upper edge	b	6		

Tab. 28: SD6 dimensions, sizes 0 to 2 [mm]

4.2.6.2 Dimensions: size 3

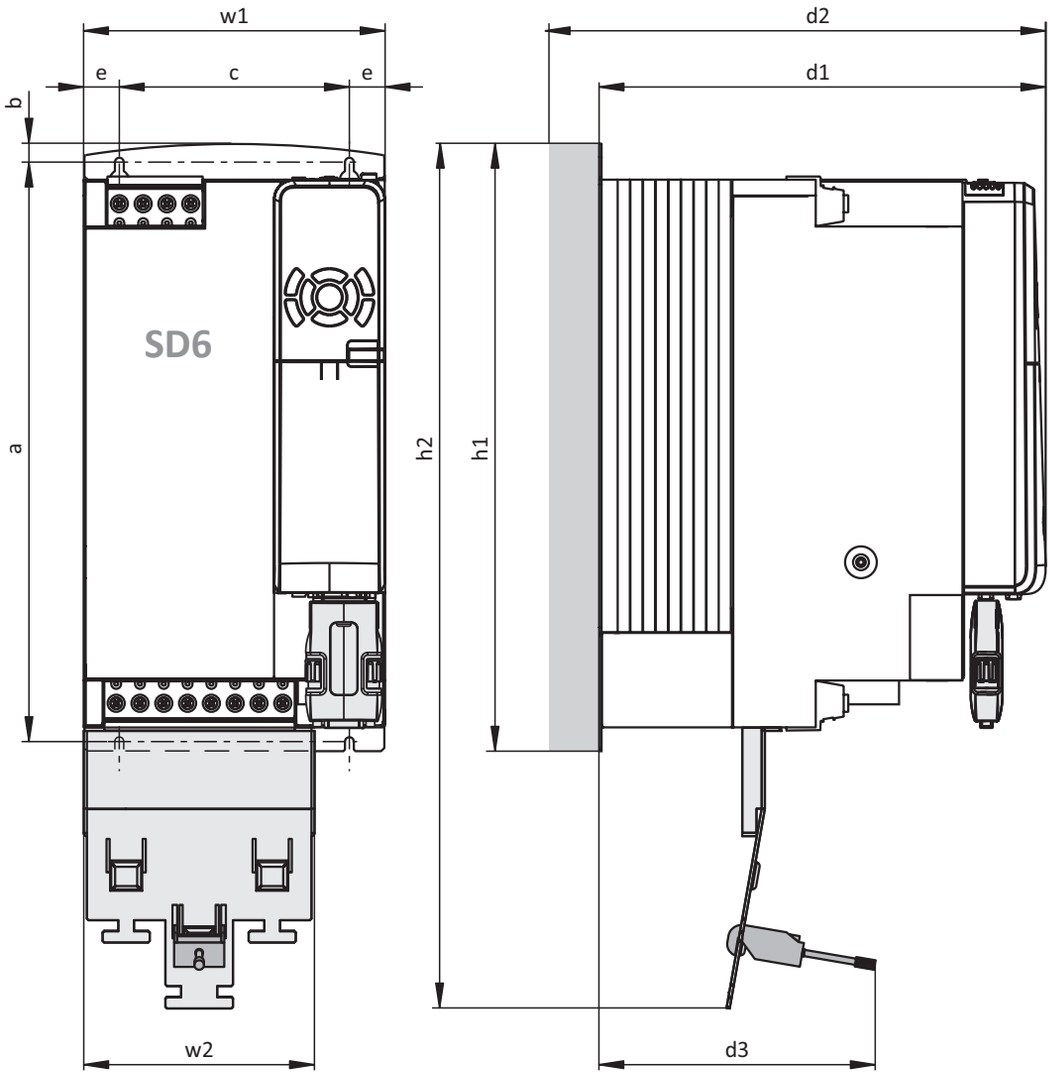

Fig. 2: SD6 dimensional drawing, size 3

Dimension			Size 3
Drive controller	Width	w1	194
	Depth	d1	305
	Depth incl. Quick DC-Link	d2	340
	Height incl. fastening clips	h1	382.5
	Height incl. EMC shroud	h2	540
EMC shroud incl. shield connection terminal	Width	w2	147
	Depth	d3	approx. 174
Fastening holes	Vertical distance	a	365+2
	Vertical distance to the upper edge	b	11.5
	Horizontal distance between the fastening holes of the drive controller	c	150+0.2/−0.2
	Horizontal distance to the side edge of the drive controller	e	20

Tab. 29: SD6 dimensions, size 3 [mm]

4.2.7 Weight

Size	Weight without packaging [g]	Weight with packaging [g]
Size 0	2530	3520
Size 1	3700	5470
Size 2	5050	6490
Size 3	13300	14800

Tab. 30: SD6 weight [g]

If you intend to order the drive controller with accessory parts, the weight increases as follows.

Accessories	Weight without packaging [g]
Communication module	50
Terminal module	135
Safety module	110

Tab. 31: Weight of the accessory part [g]

4.2.8 Minimum clearances

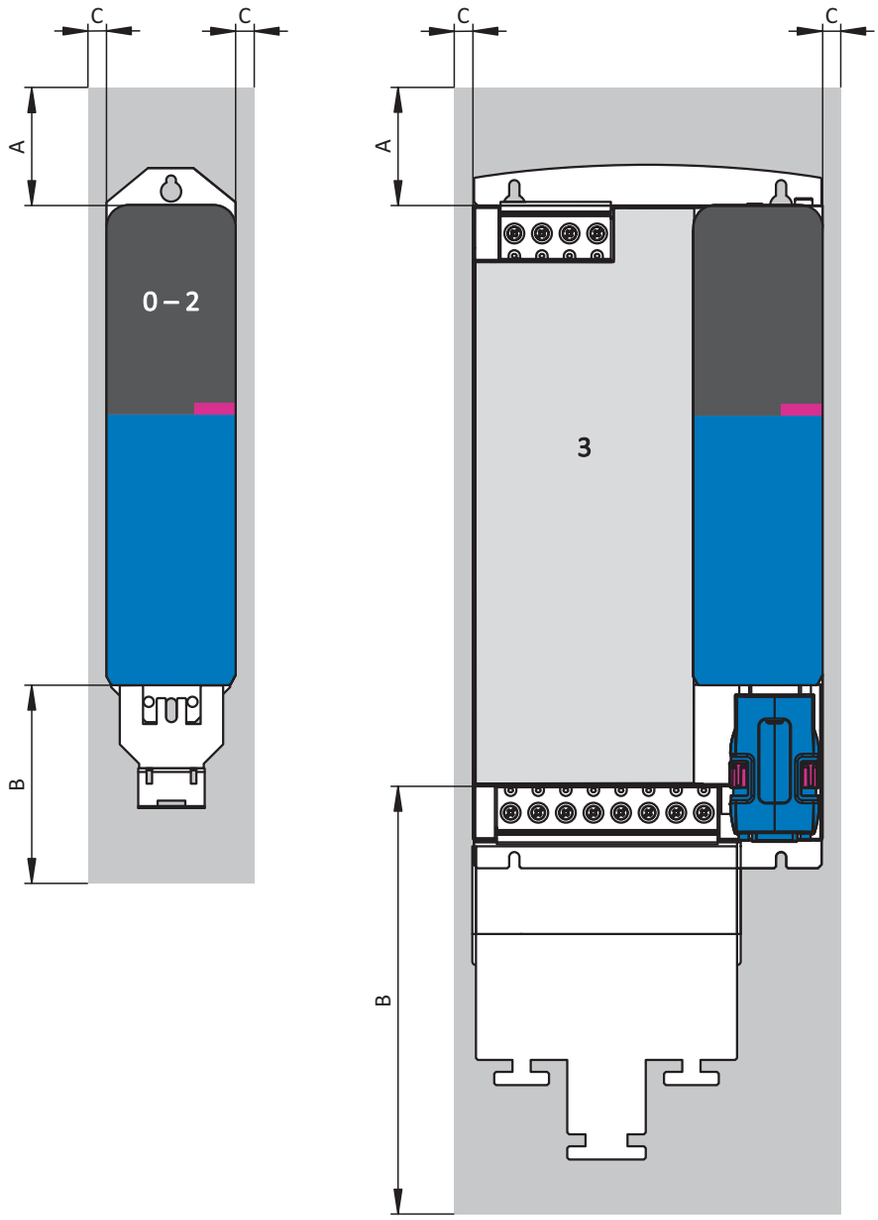

Fig. 3: Minimum clearances

The specified dimensions relate to the outer edges of the drive controller.

Minimum clearance	A (above)	B (below)	C (one the side)[8]
Size 0 – Size 2	100	100	5
... with EMC shroud	100	120	5
Size 3	100	100	5
... with EMC shroud	100	220	5

Tab. 32: Minimum clearances [mm]

Chokes and filters

Avoid installation below drive controllers or supply modules. For installation in a control cabinet, a distance of approximately 100 mm to other neighboring components is recommended. This distance ensures proper heat dissipation for chokes and filters.

Braking resistors

Avoid installation below drive controllers or supply modules. In order for heated air to flow out unimpeded, a minimum clearance of approximately 200 mm must be maintained in relation to neighboring components or walls and approximately 300 mm must be maintained to components above or ceilings.

[8] Installation without Quick DC-Link module

4.3 Drive controller/motor combinations

An explanation of the symbols used for formulas can be found in Chapter [▶ 12.1].

EZ synchronous servo motor (n_N = 2000 rpm) – SD6

						SD6A02	SD6A04	SD6A06	SD6A14	SD6A16	SD6A24	SD6A26	SD6A34	SD6A36	SD6A38
						$I_{2N,PU}$ [A] ($f_{PWM,PU}$ = 8 kHz)									
	K_{EM} [V/1000 rpm]	M_N [Nm]	I_N [A]	M_0 [Nm]	I_0 [A]	3	1.7	3.4	6	10	14	20	30	50	60
IC 410 convection cooling						$I_{2N,PU}$ / I_0									
EZ805U	142	43.7	25.9	66.1	37.9									1.3	1.6
IC 416 forced ventilation						$I_{2N,PU}$ / I_0									
EZ805B	142	77.2	45.2	94	53.9										1.1

EZ synchronous servo motor (n_N = 3000 rpm) – SD6

						SD6A02	SD6A04	SD6A06	SD6A14	SD6A16	SD6A24	SD6A26	SD6A34	SD6A36	SD6A38
						$I_{2N,PU}$ [A] ($f_{PWM,PU}$ = 8 kHz)									
	K_{EM} [V/1000 rpm]	M_N [Nm]	I_N [A]	M_0 [Nm]	I_0 [A]	3	1.7	3.4	6	10	14	20	30	50	60
IC 410 convection cooling						$I_{2N,PU}$ / I_0									
EZ301U	40	0.93	1.99	0.95	2.02	1.5		1.7							
EZ302U	86	1.59	1.6	1.68	1.67	1.8	1.0	2.0							
EZ303U	109	2.07	1.63	2.19	1.71	1.8	1.0	2.0							
EZ401U	96	2.8	2.74	3	2.88	1.0		1.2							
EZ402U	94	4.7	4.4	5.2	4.8				1.3						
EZ404U	116	6.9	5.8	8.6	6.6					1.5					
EZ501U	97	4.3	3.74	4.7	4				1.5						
EZ502U	121	7.4	5.46	8	5.76				1.0	1.7					
EZ503U	119	9.7	6.9	11.1	7.67					1.3	1.8				
EZ505U	141	13.5	8.8	16	10					1.0	1.4	2.0			
EZ701U	95	7.4	7.2	8.3	8					1.3	1.8				
EZ702U	133	12	8.2	14.4	9.6					1.0	1.5				
EZ703U	122	16.5	11.4	20.8	14						1.0	1.4			
EZ705U	140	21.3	14.2	30.2	19.5							1.0	1.5		
EZ802U	136	22.3	13.9	37.1	22.3								1.3		
EZ803U	131	26.6	17.7	48.2	31.1									1.6	1.9
IC 416 forced ventilation						$I_{2N,PU}$ / I_0									
EZ401B	96	3.4	3.4	3.7	3.6				1.7						
EZ402B	94	5.9	5.5	6.3	5.8				1.0	1.7					
EZ404B	116	10.2	8.2	11.2	8.7					1.1	1.6				
EZ501B	97	5.4	4.7	5.8	5				1.2	2.0					
EZ502B	121	10.3	7.8	11.2	8.16					1.2	1.7				
EZ503B	119	14.4	10.9	15.9	11.8						1.2	1.7			
EZ505B	141	20.2	13.7	23.4	14.7						1.0	1.4			
EZ701B	95	9.7	9.5	10.5	10					1.0	1.4	2.0			
EZ702B	133	16.6	11.8	19.3	12.9						1.1	1.6			
EZ703B	122	24	18.2	28	20							1.0	1.5		
EZ705B	140	33.8	22.9	41.8	26.5								1.1	1.9	
EZ802B	136	34.3	26.5	47.9	28.9								1.0	1.7	
EZ803B	131	49	35.9	66.7	42.3									1.2	1.4

EZ synchronous servo motor (n_N = 4500 rpm) – SD6

						SD6A02	SD6A04	SD6A06	SD6A14	SD6A16	SD6A24	SD6A26	SD6A34	SD6A36	SD6A38
						$I_{2N,PU}$ [A] ($f_{PWM,PU}$ = 8 kHz)									
	K_{EM} [V/1000 rpm]	M_N [Nm]	I_N [A]	M_0 [Nm]	I_0 [A]	3	1.7	3.4	6	10	14	20	30	50	60
IC 410 convection cooling						$I_{2N,PU}$ / I_0									
EZ505U	103	9.5	8.94	15.3	13.4						1.0	1.5			
EZ703U	99	12.1	11.5	20	17.8							1.1	1.7		
EZ705U	106	16.4	14.8	30	25.2								1.2	2.0	
EZ802U	90	10.5	11.2	34.5	33.3									1.5	1.8
IC 416 forced ventilation						$I_{2N,PU}$ / I_0									
EZ505B	103	16.4	16.4	22	19.4							1.0	1.5		
EZ703B	99	19.8	20.3	27.2	24.2								1.2		
EZ705B	106	27.7	25.4	39.4	32.8									1.5	1.8
EZ802B	90	30.6	30.5	47.4	45.1									1.1	1.3

EZ synchronous servo motor (n_N = 6000 rpm) – SD6

						SD6A02	SD6A04	SD6A06	SD6A14	SD6A16	SD6A24	SD6A26	SD6A34	SD6A36	SD6A38
						$I_{2N,PU}$ [A] ($f_{PWM,PU}$ = 8 kHz)									
	K_{EM} [V/1000 rpm]	M_N [Nm]	I_N [A]	M_0 [Nm]	I_0 [A]	3	1.7	3.4	6	10	14	20	30	50	60
IC 410 convection cooling						$I_{2N,PU}$ / I_0									
EZ301U	40	0.89	1.93	0.95	2.02	1.5		1.7							
EZ302U	42	1.5	3.18	1.68	3.48				1.7						
EZ303U	55	1.96	3.17	2.25	3.55				1.7						
EZ401U	47	2.3	4.56	2.8	5.36				1.1	1.9					
EZ402U	60	3.5	5.65	4.9	7.43					1.3	1.9				
EZ404U	78	5.8	7.18	8.4	9.78					1.0	1.4	2.0			
EZ501U	68	3.4	4.77	4.4	5.8				1.0	1.7	2.4				
EZ502U	72	5.2	7.35	7.8	9.8					1.0	1.4	2.0			
EZ503U	84	6.2	7.64	10.6	11.6						1.2	1.7			
EZ701U	76	5.2	6.68	7.9	9.38					1.1	1.5				
EZ702U	82	7.2	8.96	14.3	16.5							1.2	1.8		
IC 416 forced ventilation						$I_{2N,PU}$ / I_0									
EZ401B	47	2.9	5.62	3.5	6.83					1.5	2.0				
EZ402B	60	5.1	7.88	6.4	9.34					1.1	1.5				
EZ404B	78	8	9.98	10.5	12						1.2	1.7			
EZ501B	68	4.5	6.7	5.7	7.5					1.3	1.9				
EZ502B	72	8.2	11.4	10.5	13.4						1.0	1.5			
EZ503B	84	10.4	13.5	14.8	15.9							1.3	1.9		
EZ701B	76	7.5	10.6	10.2	12.4						1.1	1.6			
EZ702B	82	12.5	16.7	19.3	22.1								1.4		

EZHD synchronous servo motor with hollow shaft and direct drive (n_N = 3000 rpm) – SD6

						SD6A02	SD6A04	SD6A06	SD6A14	SD6A16	SD6A24	SD6A26	SD6A34	SD6A36	SD6A38
						$I_{2N,PU}$ [A] ($f_{PWM,PU}$ = 8 kHz)									
	K_{EM} [V/1000 rpm]	M_N [Nm]	I_N [A]	M_0 [Nm]	I_0 [A]	3	1.7	3.4	6	10	14	20	30	50	60
IC 410 convection cooling						$I_{2N,PU}$ / I_0									
EZHD0411U	96	1.9	2.36	2.6	2.89	1.0		1.2							
EZHD0412U	94	4.2	4.29	5.1	4.94				1.2						
EZHD0414U	116	7.7	6.3	8.5	6.88					1.5					
EZHD0511U	97	3	3.32	4.1	4.06				1.5						
EZHD0512U	121	7.0	5.59	7.8	6.13					1.6					
EZHD0513U	119	8.3	7.04	10.9	8.76					1.1	1.6				
EZHD0515U	141	14	9.46	16.4	11						1.3	1.8			
EZHD0711U	95	7.3	7.53	7.9	7.98					1.3	1.8				
EZHD0712U	133	11.6	8.18	14.4	9.99					1.0	1.4				
EZHD0713U	122	17.8	13.4	20.4	15.1							1.3	2.0		
EZHD0715U	140	24.6	17.2	31.1	21.1								1.4		

EZS synchronous servo motor for screw drive (driven threaded spindle) (n_N = 3000 rpm) – SD6

						SD6A02	SD6A04	SD6A06	SD6A14	SD6A16	SD6A24	SD6A26	SD6A34	SD6A36	SD6A38
						$I_{2N,PU}$ [A] ($f_{PWM,PU}$ = 8 kHz)									
	K_{EM} [V/1000 rpm]	M_N [Nm]	I_N [A]	M_0 [Nm]	I_0 [A]	3	1.7	3.4	6	10	14	20	30	50	60
IC 410 convection cooling						$I_{2N,PU}$ / I_0									
EZS501U	97	3.85	3.65	4.3	3.95				1.5						
EZS502U	121	6.9	5.3	7.55	5.7				1.1	1.8					
EZS503U	119	9.1	6.7	10.7	7.6					1.3	1.8				
EZS701U	95	6.65	6.8	7.65	7.7					1.3	1.8				
EZS702U	133	11	7.75	13.5	9.25					1.1	1.5	2.2			
EZS703U	122	15.3	10.8	19.7	13.5						1.0	1.5	2.2		
IC 416 forced ventilation						$I_{2N,PU}$ / I_0									
EZS501B	97	5.1	4.7	5.45	5				1.2	2.0					
EZS502B	121	10	7.8	10.9	8.16					1.2	1.7				
EZS503B	119	14.1	10.9	15.6	11.8						1.2	1.7			
EZS701B	95	9.35	9.5	10.2	10					1.0	1.4	2.0			
EZS702B	133	16.3	11.8	19	12.9						1.1	1.6			
EZS703B	122	23.7	18.2	27.7	20							1.0	1.5		

EZM synchronous servo motor for screw drive (driven threaded nut) (n_N = 3000 rpm) – SD6

						SD6A02	SD6A04	SD6A06	SD6A14	SD6A16	SD6A24	SD6A26	SD6A34	SD6A36	SD6A38
						$I_{2N,PU}$ [A] ($f_{PWM,PU}$ = 8 kHz)									
	K_{EM} [V/1000 rpm]	M_N [Nm]	I_N [A]	M_0 [Nm]	I_0 [A]	3	1.7	3.4	6	10	14	20	30	50	60
IC 410 convection cooling						$I_{2N,PU}$ / I_0									
EZM511U	97	3.65	3.55	4.25	4				1.5						
EZM512U	121	6.6	5.2	7.55	5.75				1.0	1.7					
EZM513U	119	8.8	6.55	10.6	7.6					1.3	1.8				
EZM711U	95	6.35	6.6	7.3	7.4					1.4	1.9				
EZM712U	133	10.6	7.5	13	8.9					1.1	1.6				
EZM713U	122	14.7	10.4	18.9	13						1.1	1.5			

4.4 Accessories

You can find information about the available accessories in the following chapters.

4.4.1 Safety technology

Information

The drive controller is delivered with the ST6 safety module in the standard design. If you want a drive controller with advanced safety technology, you must order it together with the drive controller. The safety modules are an integrated part of the drive controllers and must not be modified.

ST6 safety module – STO using terminals

Included in the standard version.

ID No. 56431
Accessory for the use of the Safe Torque Off safety function (STO) in safety-relevant applications (PL e, SIL 3) in accordance with DIN EN ISO 13849-1 and DIN EN 61800-5-2. Connection to a higher-level safety circuit via terminal X12.

SE6 safety module – Expanded safety functionality via terminals

ID No. 56432
Optional accessory for use in safety-related applications up to PL e, SIL 3 in accordance with DIN EN ISO 13849-1 and DIN EN 61800-5-2. In addition to the basic Safe Torque Off (STO) safety function, SE6 provides other safety functions specified in DIN EN 61800-5-2. In addition to the safe stop functions Safe Stop 1 (SS1) and Safe Stop 2 (SS2), these also include Safely-Limited Speed (SLS), Safe Brake Control (SBC), Safe Direction (SDI) and Safely-Limited Increment (SLI). The normative safety functions are supplemented by practical additional functions such as Safe Brake Test (SBT). Connection to the higher-level safety circuit using terminals X14 and X15.

X50 adapter cable (SE6 option)

ID No. 56434
Connection cable for the X50 encoder interface of the SE6 safety module with open cable ends. 1.5 m.

4.4.2 Communication

The SD6 drive controller has two interfaces for IGB communication on the top of the device as standard. The communication module is installed in the shaft at the top and it is used to connect the drive controller to the fieldbus system.
The following communication modules are available:

- EC6 for the EtherCAT connection
- CA6 for the CANopen connection
- PN6 for the PROFINET connection

IGB connecting cable

Cable for connecting the X3A or X3B interface for IGB, CAT5e, magenta.
The following designs are available:
ID No. 56489: 0.4 m.
ID No. 56490: 2 m.

PC connecting cables

ID No. 49857
Cable for connecting the X3A or X3B interface with the PC, CAT5e, blue, 5 m.

USB 2.0 Ethernet adapter

ID No. 49940
Adapter for connecting Ethernet to a USB port.

EC6 communication module

ID No. 138425
Communication module for the EtherCAT connection.

EtherCAT cables

Ethernet patch cable, CAT5e, yellow.
The following designs are available:
ID No. 49313: Length approx. 0.2 m.
ID No. 49314: Length approx. 0.35 m.

CA6 communication module

ID No. 138427
Communication module for the CANopen connection.

PN6 communication module

ID No. 138426
Communication module for the PROFINET connection.

4.4.3 Terminal module

XI6 terminal module

ID no. 138421
Terminal module for connecting analog and digital signals as well as encoders.
Supported inputs and outputs:

- 13 digital inputs (24 V_{DC})
- 10 digital outputs (24 V_{DC})
- 3 analog inputs (±10 V_{DC}, 1 x 0 – 20 mA, 16 bits)
- 2 analog outputs (±10 V_{DC}, 12 bits)

Supported encoders / interfaces:

- SSI encoder (simulation and evaluation)
- TTL incremental encoder, differential (simulation and evaluation)
- HTL incremental encoder, single-ended (simulation and evaluation)
- TTL pulse/direction interface, differential (simulation and evaluation)
- HTL pulse/direction interface, single-ended (simulation and evaluation)

RI6 terminal module

ID no. 138422

Terminal module for connecting analog and digital signals as well as encoders.

Supported inputs and outputs:

- 5 digital inputs (24 V_{DC})
- 2 digital outputs (24 V_{DC})
- 2 analog inputs (±10 V_{DC}, 1 x 0 – 20 mA, 16 bits)
- 2 analog outputs (±10 V_{DC}, ±20 mA, 12 bits)

Supported encoders / interfaces:

- Resolver (evaluation)
- EnDat 2.1 sin/cos encoder (evaluation)
- EnDat 2.1/2.2 digital encoder (evaluation)
- Sin/cos encoder (evaluation)
- SSI encoder (simulation and evaluation)
- TTL incremental encoder, differential (simulation and evaluation)
- TTL incremental encoder, single-ended (evaluation)
- HTL incremental encoder, single-ended (simulation and evaluation)
- TTL pulse/direction interface, differential (simulation and evaluation)
- TTL pulse/direction interface, single-ended (evaluation)
- HTL pulse/direction interface, single-ended (simulation and evaluation)

Information

For connecting STOBER EnDat 2.1 sin/cos cables with a 15-pin D-sub connector to an integrated motor temperature sensor, you must use the AP6A02 interface adapter (ID No. 56523), available separately, to lead out the temperature sensor cores.

IO6 terminal module

ID no. 138420

Terminal module for connecting analog and digital signals as well as encoders.

Supported inputs and outputs:

- 5 digital inputs (24 V_{DC})
- 2 digital outputs (24 V_{DC})
- 2 analog inputs (±10 V_{DC}, 1 x 0 – 20 mA, 12 bits)
- 2 analog outputs (±10 V_{DC}, ±20 mA, 12 bits)

Supported encoders / interfaces:

- HTL incremental encoder, single-ended (simulation and evaluation)
- HTL pulse/direction interface, single-ended (simulation and evaluation)

4.4.4 DC link connection

If you want to connect SD6 drive controllers in the DC link group, you will need Quick DC-Link modules of type DL6A.

You receive the DL6A rear section modules in different designs for a horizontal connection, suitable for the size of the drive controller.

The quick fastening clamps for attaching the copper rails and an insulation connection piece are contained in the scope of delivery. The copper rails are not included in the scope of delivery. These must have a cross-section of 5 x 12 mm. Insulation end sections are available separately.

DL6A Quick DC-Link for drive controllers

The following designs are available:
DL6A0
ID No. 56440
Rear section module for size 0 drive controller.
DL6A1
ID No. 56441
Rear section module for size 1 drive controller.
DL6A2
ID No. 56442
Rear section module for size 2 drive controller.
DL6A3
ID No. 56443
Rear section module for size 3 drive controller.

DL6A Quick DC-Link insulation end section

ID No. 56494
Insulation end sections for the left and right termination of the group, 2 pcs.

4.4.5 Braking resistor

In addition to drive controllers, STOBER offers the following braking resistors described below in various sizes and performance classes. For the selection, note the minimum permitted braking resistors specified in the technical data of the individual drive controller types.

4.4.5.1 Tubular fixed resistor FZMU, FZZMU

Type	FZMU 400×65			FZZMU 400×65		
ID No.	49010	55445	55446	53895	55447	55448
SD6A02	X	—	—	—	—	—
SD6A04	X	—	—	—	—	—
SD6A06	X	—	—	—	—	—
SD6A14	(X)	—	—	X	—	—
SD6A16	(X)	—	—	X	—	—
SD6A24	(—)	X	—	(X)	X	—
SD6A26	(—)	X	—	(X)	X	—
SD6A34	(—)	(X)	X	(—)	(X)	X
SD6A36	(—)	(X)	X	(—)	(X)	X
SD6A38	(—)	(X)	X	(—)	(X)	X

Tab. 33: Assignment of FZMU, FZZMU braking resistor – SD6 drive controller

X	Recommended
(X)	Possible
(—)	Useful under certain conditions
—	Not possible

Properties

Specification	FZMU 400×65			FZZMU 400×65		
ID No.	49010	55445	55446	53895	55447	55448
Type	Tubular fixed resistor			Tubular fixed resistor		
Resistance [Ω]	100	22	15	47	22	15
Power [W]	600			1200		
Therm. time const. τ_{th} [s]	40			40		
Pulse power for < 1 s [kW]	18			36		
U_{max} [V]	848			848		
Weight without packaging [g]	2200			4170		
Protection class	IP20			IP20		
Test symbols	c UL us CE			c UL us CE		

Tab. 34: FZMU, FZZMU specification

Dimensions

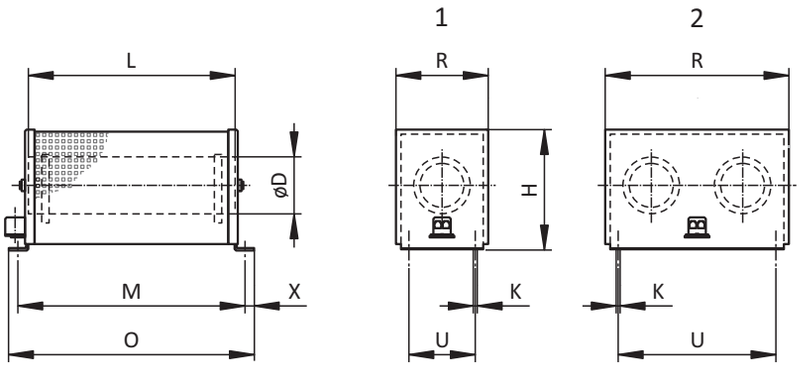

Fig. 4: FZMU (1), FZZMU (2) dimensional drawing

Dimension	FZMU 400×65			FZZMU 400×65		
ID No.	49010	55445	55446	53895	55447	55448
L x D	400 × 65			400 × 65		
H	120			120		
K	6.5 × 12			6.5 × 12		
M	430			426		
O	485			485		
R	92			185		
U	64			150		
X	10			10		

Tab. 35: FZMU, FZZMU dimensions [mm]

4.4.5.2 GVADU, GBADU flat resistor

Type	GVADU 210×20	GBADU 265×30	GBADU 405×30	GBADU 335×30	GBADU 265×30
ID No.	55441	55442	55499	55443	55444
SD6A02	X	X	X	—	—
SD6A04	X	X	X	—	—
SD6A06	X	X	X	—	—
SD6A14	(X)	(X)	(X)	X	—
SD6A16	(X)	(X)	(X)	X	—
SD6A24	(—)	(—)	(—)	(X)	X
SD6A26	(—)	(—)	(—)	(X)	X
SD6A34	(—)	(—)	(—)	(—)	(X)
SD6A36	(—)	(—)	(—)	(—)	(X)
SD6A38	(—)	(—)	(—)	(—)	(X)

Tab. 36: Assignment of GVADU, GBADU braking resistor – SD6 drive controller

X	Recommended
(X)	Possible
(—)	Useful under certain conditions
—	Not possible

Properties

Specification	GVADU 210×20	GBADU 265×30	GBADU 405×30	GBADU 335×30	GBADU 265×30
ID No.	55441	55442	55499	55443	55444
Type	Flat resistor	Flat resistor	Flat resistor	Flat resistor	Flat resistor
Resistance [Ω]	100	100	100	47	22
Power [W]	150	300	500	400	300
Therm. time const. τ_{th} [s]	60	60	60	60	60
Pulse power for < 1 s [kW]	3.3	6.6	11	8.8	6.6
U_{max} [V]	848	848	848	848	848
Cable design	Radox	FEP	FEP	FEP	FEP
Cable length [mm]	500	1500	500	1500	1500
Conductor cross-section [AWG]	18/19 (0.82 mm²)	14/19 (1.9 mm²)	14/19 (1.9 mm²)	14/19 (1.9 mm²)	14/19 (1.9 mm²)
Weight without packaging [g]	300	930	1410	1200	930
Protection class	IP54	IP54	IP54	IP54	IP54
Test symbols	c UL us CE	c UL us CE	c UL us CE	c UL us CE	c UL us CE

Tab. 37: GVADU, GBADU specification

Dimensions

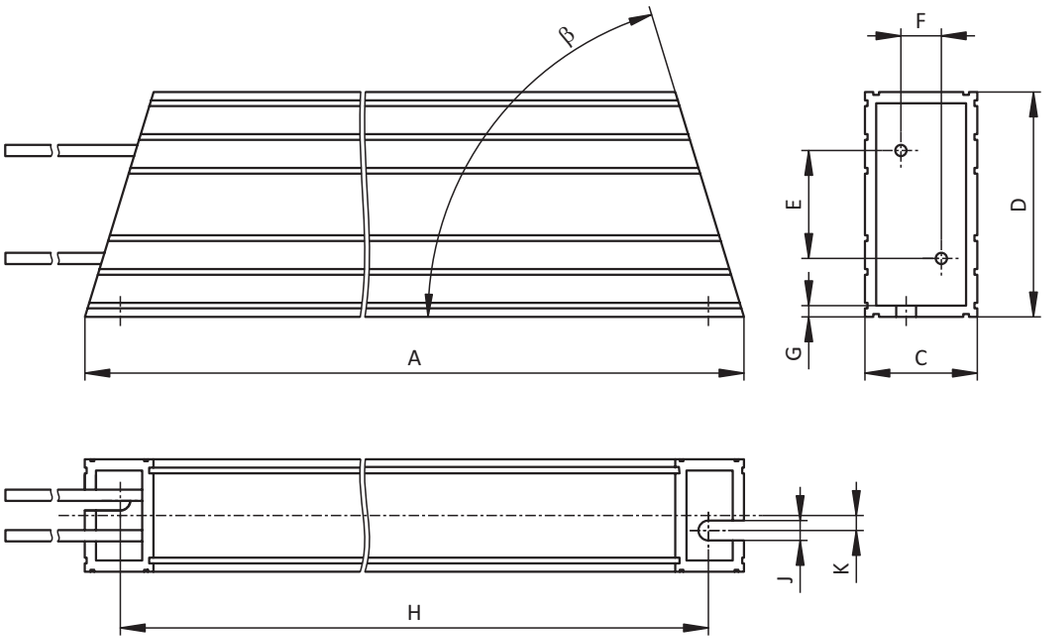

Fig. 5: GVADU, GBADU dimensional drawing

Dimension	GVADU 210×20	GBADU 265×30	GBADU 405×30	GBADU 335×30	GBADU 265×30
ID No.	55441	55442	55499	55443	55444
A	210	265	405	335	265
H	192	246	386	316	246
C	20	30	30	30	30
D	40	60	60	60	60
E	18.2	28.8	28.8	28.8	28.8
F	6.2	10.8	10.8	10.8	10.8
G	2	3	3	3	3
K	2.5	4	4	4	4
J	4.3	5.3	5.3	5.3	5.3
β	65°	73°	73°	73°	73°

Tab. 38: GVADU, GBADU dimensions [mm]

4.4.5.3 FGFKU steel-grid fixed resistor

Type	FGFKU 3100502	FGFKU 3100502	FGFKU 3111202	FGFKU 3121602
ID No.	55449	55450	55451	53897
SD6A24	X	—	—	—
SD6A26	X	—	—	—
SD6A34	(X)	X	X	X
SD6A36	(X)	X	X	X
SD6A38	(X)	X	X	X

Tab. 39: Assignment of FGFKU braking resistor – SD6 drive controller

X	Recommended
(X)	Possible
—	Not possible

Properties

Specification	FGFKU 3100502	FGFKU 3100502	FGFKU 3111202	FGFKU 3121602
ID No.	55449	55450	55451	53897
Type	Steel-grid fixed resistor			
Resistance [Ω]	22	15	15	15
Power [W]	2500	2500	6000	8000
Therm. time const. τ_{th} [s]	30	30	20	20
Pulse power for < 1 s [kW]	50	50	120	160
U_{max} [V]	848	848	848	848
Weight without packaging [g]	7500	7500	12000	18000
Protection class	IP20	IP20	IP20	IP20
Test symbols	c UL us CE	c UL us CE	c UL us CE	c UL us CE

Tab. 40: FGFKU specification

Dimensions

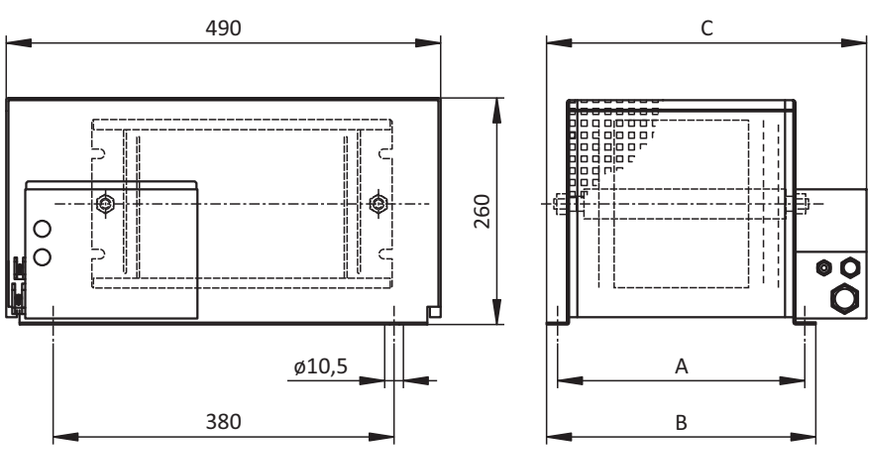

Fig. 6: FGFKU dimensional drawing

Dimension	FGFKU 3100502	FGFKU 3100502	FGFKU 3111202	FGFKU 3121602
ID No.	55449	55450	55451	53897
A	270	270	370	570
B	295	295	395	595
C	355	355	455	655

Tab. 41: FGFKU dimensions [mm]

4.4.5.4 Rear section braking resistor RB 5000

Type	RB 5022	RB 5047	RB 5100
ID No.	45618	44966	44965
SD6A02	—	—	X
SD6A04	—	—	X
SD6A06	—	—	X
SD6A14	—	X	(X)
SD6A16	—	X	(X)
SD6A24	X	—	—
SD6A26	X	—	—
SD6A34	—	—	—
SD6A36	—	—	—
SD6A38	—	—	—

Tab. 42: Assignment of RB 5000 braking resistor – SD6 drive controller

X	Recommended
(X)	Possible
—	Not possible

Properties

Specification	RB 5022	RB 5047	RB 5100
ID No.	45618	44966	44965
Resistance [Ω]	22	47	100
Power [W]	100	60	60
Therm. time const. τ_{th} [s]	8	8	8
Pulse power for < 1 s [kW]	1.5	1.0	1.0
U_{max} [V]	800	800	800
Weight without packaging [g]	640	460	440
Cable design	Radox	Radox	Radox
Cable length [mm]	250	250	250
Conductor cross-section [AWG]	18/19 (0.82 mm²)	18/19 (0.82 mm²)	18/19 (0.82 mm²)
Maximum torque of M5 threaded bolts [Nm]	5	5	5
Protection class	IP40	IP40	IP40
Test symbols	c UL us CE	c UL us CE	c UL us CE

Tab. 43: RB 5000 specification

Dimensions

Dimension	RB 5022	RB 5047	RB 5100
ID No.	45618	44966	44965
Height	300	300	300
Width	94	62	62
Depth	18	18	18
Drilling diagram corresponds to size	Size 2	Size 1	Size 0 and Size 1

Tab. 44: RB 5000 dimensions [mm]

4.4.6 Choke

Technical specifications for suitable chokes can be found in the following chapters.

4.4.6.1 TEP power choke

For each size 3 SD6 drive controller, you need one power choke. It dampens voltage and current peaks and reduces the load of the drive controller power feed-in.

Properties

Specification	TEP4010-2US00
ID No.	56528
Phases	3
Thermally allowed continuous current	100 A
Nominal current $I_{N,MF}$	90 A
Absolute loss P_V	103 W
Inductance	0.14 mH
Voltage range	3 × 400 V_{AC}, +32%/−50% 3 × 480 V_{AC}, +10%/−58%
Voltage drop U_k	2%
Frequency range	50/60 Hz
Protection class	IP00
Max. surrounding temperature $\vartheta_{amb,max}$	40 °C
Insulation class	B
Connection	Screw terminal
Connection type	Flexible with and without end sleeve
Max. conductor cross-section	6 – 35 mm²
Tightening torque	2.5 Nm
Insulation stripping length	17 mm
Installation	Screws
Directive	EN 61558-2-20
UL Recognized Component (CAN; USA)	Yes
Test symbol, symbol	c US

Tab. 45: TEP specification

Dimensions

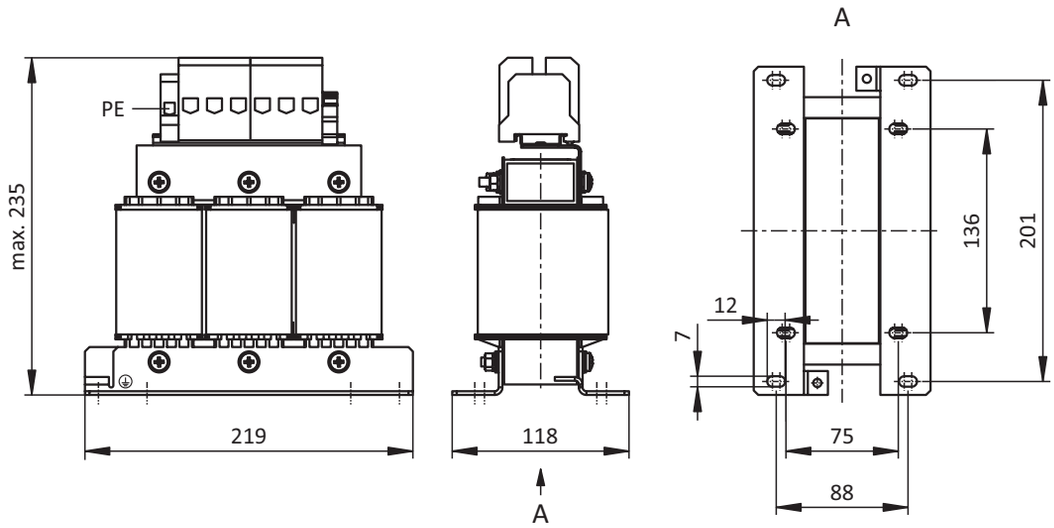

Fig. 7: Power choke dimensional drawing

Dimensions	TEP4010-2US00
Height [mm]	235
Width [mm]	219
Depth [mm]	118
Vertical distance 1 – fastening holes [mm]	201
Vertical distance 2 – Fastening holes [mm]	136
Horizontal distance 1 – fastening holes [mm]	88
Horizontal distance 2 – Fastening holes [mm]	75
Drill holes – Depth [mm]	7
Drill holes – Width [mm]	12
Screw connection – M	M6
Weight without packaging [g]	9900

Tab. 46: TEP dimensions and weight

4.4.6.2 TEP output choke

Output chokes are required for connecting size 0 to 2 drive controllers from a cable length > 50 m in order to reduce interference pulses and protect the drive system.

Information

The following technical data only applies to a rotating magnetic field frequency of 200 Hz. For example, this rotating magnetic field frequency is achieved with a motor with 4 pole pairs and a nominal speed of 3000 rpm. Always observe the specified derating for higher rotating magnetic field frequencies. Also observe the relationship with the clock frequency.

Properties

Specification	TEP3720-0ES41	TEP3820-0CS41	TEP4020-0RS41
ID No.	53188	53189	53190
Voltage range	3 × 0 to 480 V_{AC}		
Frequency range	0 – 200 Hz		
Nominal current $I_{N,MF}$ at 4 kHz	4 A	17.5 A	38 A
Nominal current $I_{N,MF}$ at 8 kHz	3.3 A	15.2 A	30.4 A
Max. permitted motor cable length with output choke	100 m		
Max. surrounding temperature $\vartheta_{amb,max}$	40 °C		
Protection class	IP00		
Winding losses	11 W	29 W	61 W
Iron losses	25 W	16 W	33 W
Connection	Screw terminal		
Max. conductor cross-section	10 mm²		
UL Recognized Component (CAN; USA)	Yes		
Test symbols			

Tab. 47: TEP specification

Dimensions

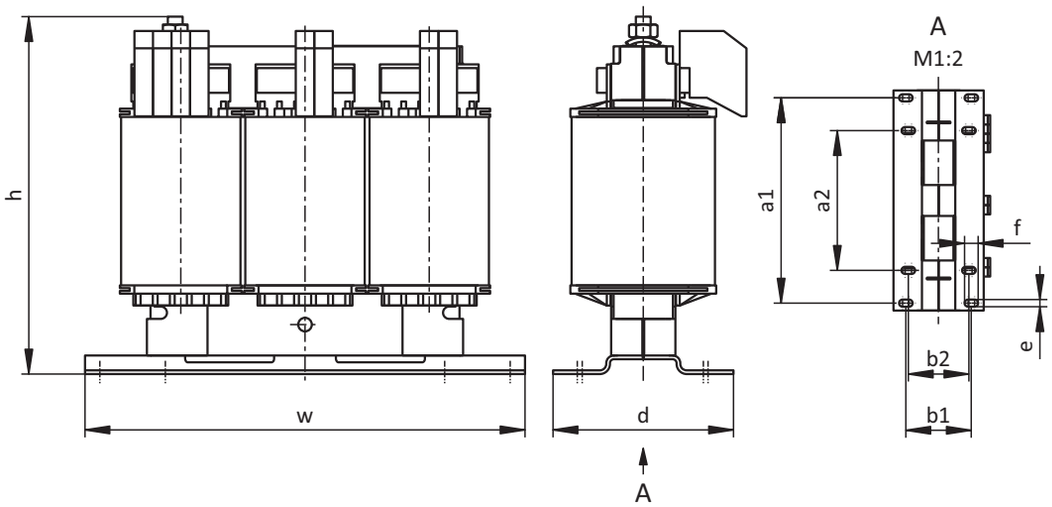

Fig. 8: TEP dimensional drawing

Dimension	TEP3720-0ES41	TEP3820-0CS41	TEP4020-0RS41
Height h [mm]	Max. 153	Max. 153	Max. 180
Width w [mm]	178	178	219
Depth d [mm]	73	88	119
Vertical distance – Fastening holes a1 [mm]	166	166	201
Vertical distance – Fastening holes a2 [mm]	113	113	136
Horizontal distance – Fastening holes b1 [mm]	53	68	89
Horizontal distance – Fastening holes b2 [mm]	49	64	76
Drill holes – Depth e [mm]	5.8	5.8	7
Drill holes – Width f [mm]	11	11	13
Screw connection – M	M5	M5	M6
Weight without packaging [g]	2900	5900	8800

Tab. 48: TEP dimensions and weight

4.4.7 EMC shroud

You can use the EM6A EMC shroud to connect the cable shield of the power cable. Two different designs are available.

EM6A0 EMC shroud

ID No. 56459
EMC shroud for the SD6 drive controller up to size 2.
Accessory part for shield connection of the power cable.
Can be attached to the basic housing.
Including shield connection terminal.

EMC shroud EM6A3

ID No. 56521
EMC shroud for drive controllers of the MDS 5000, SDS 5000 and SD6 series.
Accessory part for shield connection of the power cable for drive controllers up to size 3.
Can be attached to the basic housing.
Including shield connection terminal.
If necessary you can also connect the cable shield of the braking resistor and DC link connection to the shroud.

4.4.8 Encoder adapter box

LA6A00 encoder adapter box

ID No. 56510
Interface adapter for differential TTL incremental signals and single-ended TTL Hall sensor signals.
The adapter converts and transmits TTL signals from synchronous linear motors to the SD6 drive controller. A variable, internal interface converts the input signals appropriately for the STOBER standard interfaces.

X120 SSI/TTL connection cable

ID No. 49482
Cable for connecting the X120 TTL interface on the SD6 drive controller (on terminal module RI6 or XI6) with the X301 interface on the LA6 adapter box in order to transfer Hall sensor signals. 0.3 m.

LA6 / AX 5000 connection cable

Cable for connecting the X4 connection on the SD6 drive controller to X300 on the LA6 adapter box in order to transmit incremental encoder signals.
The following designs are available:
ID No. 45405: 0.5 m.
ID No. 45386: 2.5 m.

4.4.9 Encoder battery module

Absolute Encoder Support AES

ID No. 55452
Battery module for buffering the supply voltage when using the EnDat 2.2 digital inductive encoder with battery-buffered multi-turn stage, for example EBI1135 or EBI135.
A battery is included.

Information

Note that a 15-pin extension cable between the socket and the AES may be necessary for the connection to the drive controller due to limited space.

a) A commercially available shielded extension cable with a 15-pin D-sub connector and a length of ≤ 1 m can be used between the socket and the AES.

AES replacement battery

ID No. 55453
Replacement battery for AES battery module.

4.4.10 Removable data storage

Paramodul removable data storage

Included in the standard version.

ID No. 56403
The plug-in Paramodul with integrated microSD card (from 512 MB, industrial type) is available as a storage medium.

4.5 Further information

4.5.1 Directives and standards

The following European directives and standards are relevant to the drive controllers:

- Machinery Directive 2006/42/EC
- Low Voltage Directive 2014/35/EU
- EMC Directive 2014/30/EU
- EN 61326-3-1:2008
- EN 61800-3:2004 and A1:2012
- EN 61800-5-1:2007
- EN 61800-5-2:2007
- EN 50178:1997

4.5.2 Symbols, marks and test symbols

Choke without overload protection in accordance with DIN EN 61558-2-20.

Grounding symbol
Grounding symbol in accordance with IEC 60417, symbol 5019.

RoHS lead-free mark
Marking in accordance with RoHS directive 2011-65-EU.

CE mark
Manufacturer's self declaration: The product meets the requirements of EU directives.

UL test symbol
This product is listed by UL for the United States and Canada. Representative samples of this product have been evaluated by UL and meet the requirements of applicable standards.

UL recognized component mark
This component or material is recognized by UL. Representative samples of this product have been evaluated by UL and meet applicable requirements.

4.5.3 Additional documentation

Additional documentation related to the product can be found at
http://www.stoeber.de/en/downloads/

Enter the ID of the documentation in the Search... field.

Documentation	ID
Manual for SD6 drive controllers	442426

5 POSIDYN SDS 5000 Servo inverters

Table of contents

5.1 Overview 124

5.1.1 Features 125

5.1.2 Software components 127

5.1.3 Application training 128

5.2 Technical data 128

5.2.1 Type designation 128

5.2.2 Sizes 128

5.2.3 General technical data 129

5.2.4 Electrical data 130

5.2.5 Derating by increasing the clock frequency 136

5.2.6 Dimensions 137

5.2.7 Minimum clearances 139

5.3 Inverter/motor combination 139

5.4 Accessories 142

5.4.1 Safety technology 142

5.4.2 Communication 142

5.4.3 Terminal module 144

5.4.4 Braking resistor 145

5.4.5 Choke 151

5.4.6 Brake module and EMC shroud 153

5.4.7 Axis switcher 153

5.4.8 Encoder battery module 154

5.4.9 Removable data storage 154

5.5 Further information 155

5.5.1 Directives and standards 155

5.5.2 Symbols, marks and test symbols 155

5.5.3 Additional documentation 155

5 Servo inverters

POSIDYN SDS 5000

5.1 Overview

High dynamics for fully digital servo axes

Features

- Nominal output current up to 60 A (at 8 kHz clock frequency)
- 250% overload capacity
- Power range: 0.75 kW to 45 kW
- Control of rotary synchronous servo motors and asynchronous motors
- Multi-functional encoder interfaces
- Automatic motor parameterization from the electronic motor nameplate
- Isochronic system bus (IGB motion bus) for parameterization and multi-axis applications
- Communication using PROFIBUS DP, PROFINET, CANopen or EtherCAT
- Safe Torque Off (STO) and Safe Stop 1 (SS1) safety functions: SIL 3, PL e (cat. 3)
- Digital and analog inputs and outputs as an option
- Brake chopper, brake control and line filter
- Convenient operating unit consisting of plain-text display and buttons
- Paramodul removable data storage

5.1.1 Features

The 5th generation series of STOBER inverters are purely digital, modular inverter systems for operating rotary synchronous and asynchronous motors. It includes product types for direct operation on a one or three-phase network in a voltage range from 200 V_{AC} to 528 V_{AC}. An EMC line filter is integrated. EnDat 2.1/2.2 digital, SSI and incremental (HTL/TTL) are available as encoder interfaces in the standard design. A resolver evaluation is available as an option. The inverter can be adapted to the requirements of individual applications using different option modules. The ASP 5001 safety module makes it possible to implement the Safe Torque Off (STO) and Safe Stop 1 (SS1) safety functions in accordance with DIN EN ISO 13849-1 and DIN EN 61800-5-2 for safety-relevant applications. Communication modules provide the connection to a controller over the PROFIBUS DP, PROFINET, CANopen or EtherCAT fieldbus. In addition, terminal modules are available for connecting analog and digital signals as well as additional encoder signals. A plain text display and keyboard simplify diagnostics in the event of a fault and enable fast access to parameters. The Paramodul removable data storage can be used to transfer all application-relevant data from one inverter to another.

STOBER synchronous servo motors are ideally intended for operation with the EnDat 2.1/2.2 digital encoder. These encoder systems can deliver the highest control quality. Motor parameterization can be derived automatically from the electronic motor nameplate.

POSIDYN SDS 5000

Sequential axis switching with POSISwitch AX 5000

The POSISwitch AX 5000 accessory allows for up to four synchronous servo motors to be operated on one inverter sequentially using the EnDat 2.1/2.2 digital absolute encoder. The POSISwitch AX 5000 module is used to switch absolute encoder signals as well as control signals for brake and motor line switching. Switching is easy and EMC interference-free thanks to the entirely digital encoder signals with EnDat protocol.

Integrated bus (IGB) for performance, convenience and safety

SDS 5000 servo inverters feature two interfaces for the integrated bus in the standard version. The integrated bus is used for easy configuration over Ethernet and isochronic data exchange for the following functions:

- Multi-axis synchronization between the servo inverters (IGB motion bus)
- Internet connection for remote maintenance of individual and multiple inverters
- Direct connection between servo inverter and PC

IGB motion bus

The IGB motion bus allows for cyclic, isochronic data exchange between multiple POSIDYN SDS 5000 units integrated into the IGB network. In addition to transferring guide values for master/slave operation, any other data items can also be exchanged, such as tailor-made applications.

STOBER remote maintenance concept

STOBER remote maintenance enables commissioning software to be used to perform all processes and sequences just like an on-site service visit. The concept guides users through a controlled and protected procedure. It ensures that the person responsible for the machine is there on site to pay attention to special situations and personal safety. On the other end, the remote maintenance specialist has the assurance of communicating with a responsible employee on site who is monitoring the situation on the machine.

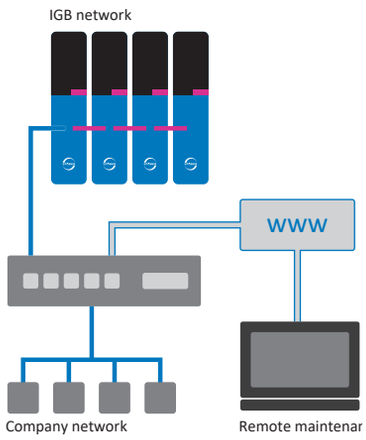

Remote maintenance enables all processes and sequences to be performed just like an on-site service visit.

Brake management

Using the optional BRS 5001 brake module, the POSIDYN SDS 5000 servo inverter can activate one or two 24 V_{DC} brake systems. Brake management provides the following functions for both brake systems:

- Cyclic brake test
- Bed in brake

Optionally available: BRS 5001 brake module

POSITool

The 5th generation of POSITool project configuration and commissioning software has all the functions needed for efficient use of inverters in single and multi-axis applications.

Paramodul removable data storage

Removable data storage for fast series commissioning by copying and easy service when replacing devices.

5.1.2 Software components

Modular application software

Various standard applications can be loaded onto the devices of the 5th STOBER inverter generation with the POSITool commissioning software as needed. Furthermore, programming based on IEC 61131-3 with CFC can be used to create new applications or expand existing ones. The inverter operating system is multi-axis capable. It supports up to four axes with separate application and parameter ranges.

Velocity mode (standard application)

- **Fast set value**
  Simple speed application for lean applications. The speed reference value and torque limiting can be specified using analog inputs as well as digitally.

Torque/force and velocity mode (standard application)

- **Comfort set value**
  Expanded torque and speed set value application. Set values and limits can be assigned with the fast set value as well as using fixed values, motor potentiometers and other functions.
- **Technology controller**
  PID controller for torque or speed-controlled applications.

Positioning and master/slave mode (standard application)

- **Command, synchronous command**
  High-performance positioning application with a command interface based on PLCopen. The data for a motion task including target position, velocity and acceleration are transferred together over fieldbus to the inverter, which then processes them independently. The functional scope is rounded out by an electrical cam, motion block switching point and Posi-Latch.
- **Motion block**
  Extensive positioning application with up to 256 motion blocks based on PLCopen. The motion blocks can be selected individually over fieldbus or with digital inputs. They can also be started in a chain. The functional scope is rounded out by an electrical cam, motion block switching point and Posi-Latch.

Electronic cam disk with PLCopen interface (tailor-made applications)

The electronic cam disk application makes it possible to implement complex motion tasks such as:

- Flying saw
- Synchronizer (clock in/clock out)
- Cross cutter
- Welding bar/embossing stamp
- Print mark control

These applications can be implemented quickly and easily using readily understandable, free graphical programming based on IEC 61131-3 CFC. This also allows for customer-specific adaptations to special system conditions. Function blocks based on PLCopen Motion Control are available for this purpose for trained users.

5.1.3 Application training

STOBER offers a multi-level training program that is essentially focused on the inverter.

G5 Basic

Training content: System overview, installation and commissioning of the inverter. Use of option modules. Parameterization, commissioning and diagnostics using the integrated display and commissioning software. Remote maintenance. Basics of controller optimization. Configuration of the drive train. Integrated software functions. Software applications. Connection to a higher-level controller. Basics of safety technology. Practical exercises on training topics.

Software used: POSITool.

G5 Customized

Training content: Graphical programming with CFC. Special knowledge for regulating, control and safety technology. Electronic cam disk. Practical exercises on training topics.

5.2 Technical data

Technical data for inverters can be found in the following sections.

5.2.1 Type designation

SDS	5	075	A

Tab. 1: Example code for type designation

Code	Designation	Design
SDS	Series	
5	Generation	Generation 5
075	Power	075 = 7.5 kW
– **A**	Hardware variants	No identification: HW 199 or lower A: HW 200 or higher

Tab. 2: Meaning of the example code

5.2.2 Sizes

Type	ID No.	Size
SDS 5007A	55428	Size 0
SDS 5008A	55429	Size 0
SDS 5015A	55430	Size 0
SDS 5040A	55431	Size 1
SDS 5075A	55432	Size 1
SDS 5110A	55433	Size 2
SDS 5150A	55434	Size 2
SDS 5220A	55435	Size 3
SDS 5370A	55436	Size 3
SDS 5450A	55437	Size 3

Tab. 3: Available SDS 5000 types and sizes

SDS 5000 in sizes 3, 2, 1 and 0

5.2.3 General technical data

The following information applies to all inverter types.

Device features	
Protection class of the device	IP20
Protection class of the installation space	At least IP54
Protection class	Protection class I in accordance with DIN EN 61140
Radio interference suppression	Integrated line filter in accordance with DIN EN 61800-3, interference emission class C3
Overvoltage category	III in accordance with DIN EN 61800-5-1
Test symbols	CE UL LISTED POWER CONVERSION EQUIPMENT 52PA c UL

Tab. 4: Device features

Transport and storage conditions	
Storage/ transport temperature	−20 °C to +70 °C Maximum change: 20 K/h
Relative humidity	Maximum relative humidity 85%, non-condensing
Vibration (transport) in accordance with DIN EN 60068-2-6	5 Hz ≤ f ≤ 9 Hz: 3.5 mm 9 Hz ≤ f ≤ 200 Hz: 10 m/s² 200 Hz ≤ f ≤ 500 Hz: 15 m/s²
Fall height for freefall[1] Weight < 100 kg in accordance with DIN EN 61800-2 (or DIN EN 60721-3-2:1997, class 2M1)	0.25 m

Tab. 5: Transport and storage conditions

Operating conditions	
Surrounding temperature during operation	0 °C to 45 °C with nominal data 45 °C to 55 °C with derating −2.5% / K
Relative humidity	Maximum relative humidity 85%, non-condensing
Installation altitude	0 m to 1000 m above sea level without restrictions 1000 m to 2000 m above sea level with −1.5%/100 m derating
Pollution degree	Pollution degree 2 in accordance with EN 50178
Ventilation	Installed fan
Vibration (operation) in accordance with DIN EN 60068-2-6	5 Hz ≤ f ≤ 9 Hz: 0.35 mm 9 Hz ≤ f ≤ 200 Hz: 1 m/s²

Tab. 6: Operating conditions

Discharge times	
Self-discharge of DC link	6 min

Tab. 7: Discharge times of the DC link circuit

[1] Only valid for components in original packaging

5.2.4 Electrical data

The electrical data of the available sizes as well as the properties of the brake chopper can be found in the following sections.

An explanation of the symbols used for formulas can be found in Chapter [▸ 12.1].

5.2.4.1 Size 0: SDS 5007A to SDS 5015A

Electrical data	SDS 5007A	SDS 5008A	SDS 5015A
ID No.	55428	55429	55430
Recommended motor rating	0.75 kW	0.75 kW	1.5 kW
U_{1PU}	1 × 230 V, +20% / −40%, 50/60 Hz	3 × 400 V, +32% / −50%, 50 Hz; 3 × 480 V, +10% / −58%, 60 Hz	
$I_{1N,PU}$	1 × 5.9 A	3 × 2.2 A	3 × 4 A
f_{2PU}	0 – 700 Hz		
U_{2PU}	0 – 230 V	0 – 400 V	
U_{maxPU}	440 V	830 V	

Tab. 8: SDS 5000 electrical data, size 0

Nominal currents up to +45 °C (in the control cabinet)

Operation with asynchronous motor

Electrical data	SDS 5007A	SDS 5008A	SDS 5015A
$I_{2N,PU}$	3 × 4 A	3 × 2.3 A	3 × 4.5 A
I_{2maxPU}	180% for 5 s; 150% for 30 s		
$f_{PWM,PU}$	4 kHz[2]		

Tab. 9: SDS 5000 electrical data, size 0, for 4 kHz clock frequency

Operation with synchronous servo motor

Electrical data	SDS 5007A	SDS 5008A	SDS 5015A
$I_{2N,PU}$	3 × 3 A	3 × 1.7 A	3 × 3.4 A
I_{2maxPU}	250% for 2 s; 200% for 5 s		
$f_{PWM,PU}$	8 kHz[3]		

Tab. 10: SDS 5000 electrical data, size 0, for 8 kHz clock frequency

Electrical data	SDS 5007A	SDS 5008A	SDS 5015A
U_{onCH}	400 – 420 V	780 – 800 V	
U_{offCH}	360 – 380 V	740 – 760 V	
R_{2minRB}	100 Ω	100 Ω	
P_{maxRB}	1.8 kW	6.4 kW	

Tab. 11: Brake chopper electrical data, size 0

[2] Clock frequency adjustable from 4 to 16 kHz (see the chapter on derating)

[3] Clock frequency adjustable from 4 to 16 kHz (see the chapter on derating)

5.2.4.2 Size 1: SDS 5040A to SDS 5075A

Electrical data	SDS 5040A	SDS 5075A
ID No.	55431	55432
Recommended motor rating	4.0 kW	7.5 kW
U_{1PU}	3 × 400 V, +32% / −50%, 50 Hz; 3 × 480 V, +10% / −58%, 60 Hz	
$I_{1N,PU}$	3 × 9.3 A	3 × 15.8 A
f_{2PU}	0 – 700 Hz	
U_{2PU}	0 – 400 V	
U_{maxPU}	830 V	

Tab. 12: SDS 5000 electrical data, size 1

Nominal currents up to +45 °C (in the control cabinet)

Operation with asynchronous motor

Electrical data	SDS 5040A	SDS 5075A
$I_{2N,PU}$	3 × 10 A	3 × 16 A
I_{2maxPU}	180% for 5 s; 150% for 30 s	
$f_{PWM,PU}$	4 kHz[4]	

Tab. 13: SDS 5000 electrical data, size 1, for 4 kHz clock frequency

Operation with synchronous servo motor

Electrical data	SDS 5040A	SDS 5075A
$I_{2N,PU}$	3 × 6 A	3 × 10 A
I_{2maxPU}	250% for 2 s; 200% for 5 s	
$f_{PWM,PU}$	8 kHz[5]	

Tab. 14: SDS 5000 electrical data, size 1, for 8 kHz clock frequency

Electrical data	SDS 5040A	SDS 5075A
U_{onCH}	780 – 800 V	
U_{offCH}	740 – 760 V	
R_{2minRB}	47 Ω	47 Ω
P_{maxRB}	13.6 kW	13.6 kW

Tab. 15: Brake chopper electrical data, size 1

[4] Clock frequency adjustable from 4 to 16 kHz (see the chapter on derating)

[5] Clock frequency adjustable from 4 to 16 kHz (see the chapter on derating)

5.2.4.3 Size 2: SDS 5110A to SDS 5150A

Electrical data	SDS 5110A	SDS 5150A
ID No.	55433	55434
Recommended motor rating	11 kW	15 kW
U_{1PU}	3 × 400 V, +32% / −50%, 50 Hz; 3 × 480 V, +10% / −58%, 60 Hz	
$I_{1N,PU}$	3 × 24.5 A	3 × 32.6 A
f_{2PU}	0 – 700 Hz	
U_{2PU}	0 – 400 V	
U_{maxPU}	830 V	

Tab. 16: SDS 5000 electrical data, size 2

Nominal currents up to +45 °C (in the control cabinet)

Operation with asynchronous motor

Electrical data	SDS 5110A	SDS 5150A
$I_{2N,PU}$	3 × 22 A	3 × 32 A
I_{2maxPU}	180% for 5 s; 150% for 30 s	
$f_{PWM,PU}$	4 kHz[6]	

Tab. 17: SDS 5000 electrical data, size 2, for 4 kHz clock frequency

Operation with synchronous servo motor

Electrical data	SDS 5110A	SDS 5150A
$I_{2N,PU}$	3 × 14 A	3 × 20 A
I_{2maxPU}	250% for 2 s; 200% for 5 s	
$f_{PWM,PU}$	8 kHz[7]	

Tab. 18: SDS 5000 electrical data, size 2, for 8 kHz clock frequency

Electrical data	SDS 5110A	SDS 5150A
U_{onCH}	780 – 800 V	
U_{offCH}	740 – 760 V	
R_{2minRB}	22 Ω	
P_{maxRB}	29.1 kW	

Tab. 19: Brake chopper electrical data, size 2

[6] Clock frequency adjustable from 4 to 16 kHz (see the chapter on derating)

[7] Clock frequency adjustable from 4 to 16 kHz (see the chapter on derating)

5.2.4.4 Size 3: SDS 5220A to SDS 5450A

Electrical data	SDS 5220A	SDS 5370A	SDS 5450A
ID No.	55435	55436	55437
Recommended motor rating	22 kW	37 kW	45 kW
U_{1PU}	3 × 400 V, +32% / −50%, 50 Hz; 3 × 480 V, +10% / −58%, 60 Hz		
$I_{1N,PU}$	1 × 37 A	3 × 62 A	3 × 76 A
f_{2PU}	0 – 700 Hz		
U_{2PU}	0 – 400 V		
U_{maxPU}	830 V		

Tab. 20: SDS 5000 electrical data, size 3

Nominal currents up to +45 °C (in the control cabinet)

Operation with asynchronous motor

Electrical data	SDS 5220A	SDS 5370A	SDS 5450A
$I_{2N,PU}$	3 × 44 A	3 × 70 A	3 × 85 A
I_{2maxPU}	180% for 5 s; 150% for 30 s		
$f_{PWM,PU}$	4 kHz[8]		

Tab. 21: SDS 5000 electrical data, size 3, for 4 kHz clock frequency

Operation with synchronous servo motor

Electrical data	SDS 5220A	SDS 5370A	SDS 5450A
$I_{2N,PU}$	3 × 30 A	3 × 50 A	3 × 60 A
I_{2maxPU}	250% for 2 s; 200% for 5 s		
$f_{PWM,PU}$	8 kHz[9]		

Tab. 22: SDS 5000 electrical data, size 3, for 8 kHz clock frequency

Electrical data	SDS 5220A	SDS 5370A	SDS 5450A
U_{onCH}	780 – 800 V		
U_{offCH}	740 – 760 V		
R_{intRB}	30 Ω (PTC resistance; 100 W; max. 1 kW for 1 s; τ = 40 s)		
R_{2minRB}	15 Ω		
P_{maxRB}	42 kW		

Tab. 23: Brake chopper electrical data, size 3

[8] Clock frequency adjustable from 4 to 16 kHz (see the chapter on derating)

[9] Clock frequency adjustable from 4 to 16 kHz (see the chapter on derating)

5.2.4.5 Power loss data in accordance with EN 61800-9-2

Type	Nominal current $I_{2N,PU}$	Apparent power	Absolute losses $P_{V,CU}$[10]	Operating points[11]								IE class[12]
				(0/25)	(0/50)	(0/100)	(50/25)	(50/50)	(50/100)	(90/50)	(90/100)	
				Relative losses								
	[A]	[kVA]	[W]	[%]								
SDS 5007A	4	0.9	10	5.01	5.07	5.68	5.20	5.37	6.30	5.88	7.43	IE2
SDS 5008A	2.3	1.6	10	2.98	3.13	3.49	3.02	3.22	3.71	3.36	4.09	IE2
SDS 5015A	4.5	3.1	12	1.71	1.86	2.24	1.75	1.97	2.51	2.16	3.04	IE2
SDS 5040A	10	6.9	12	1.38	1.54	1.93	1.43	1.64	2.17	1.80	2.57	IE2
SDS 5075A	16	11.1	12	0.95	1.12	1.66	0.99	1.23	1.98	1.41	2.52	IE2
SDS 5110A	22	15.2	15	0.80	0.97	1.49	0.84	1.06	1.75	1.21	2.19	IE2
SDS 5150A	32	22.2	15	0.70	0.87	1.40	0.74	0.97	1.66	1.11	2.08	IE2
SDS 5220A	44	30.5	35	0.61	0.76	1.21	0.68	0.90	1.53	1.06	1.96	IE2
SDS 5370A	70	48.5	35	0.53	0.69	1.18	0.59	0.82	1.49	0.97	1.89	IE2
SDS 5450A	85	58.9	35	0.47	0.64	1.18	0.54	0.78	1.50	0.94	1.94	IE2

Tab. 24: Relative losses of inverter SDS 5000 according to EN 61800-9-2

[10] Absolute losses for a power unit that is switched off

[11] Operating points for relative motor stator frequency in % and relative torque current in %

[12] IE class in accordance with EN 61800-9-2

Type	Nominal current $I_{2N,PU}$	Apparent power	Absolute losses $P_{V,CU}$[13]	Operating points[14]								IE class[15]	Compar-ison[16]
				(0/25)	(0/50)	(0/100)	(50/25)	(50/50)	(50/100)	(90/50)	(90/100)		
				Absolute losses P_V									
	[A]	[kVA]	[W]	[W]									[%]
SDS 5007A	4	0.9	10	45.1	45.6	51.1	46.8	48.3	56.7	52.9	66.9	IE2	51.8
SDS 5008A	2.3	1.6	10	47.7	50.1	55.8	48.3	51.5	59.3	53.8	65.4	IE2	40.2
SDS 5015A	4.5	3.1	12	52.9	57.6	69.3	54.4	61.0	77.9	67.1	94.1	IE2	39.6
SDS 5040A	10	6.9	12	95.3	106.1	133.3	98.6	113.2	149.9	123.9	177.0	IE2	37.1
SDS 5075A	16	11.1	12	104.9	124.0	184.6	110.3	136.6	219.8	156.0	279.8	IE2	35.8
SDS 5110A	22	15.2	15	121.5	146.9	226.1	128.1	161.6	266.0	183.7	332.7	IE2	32.9
SDS 5150A	32	22.2	15	154.7	192.8	311.3	164.6	214.6	369.3	245.9	462.1	IE2	38.3
SDS 5220A	44	30.5	35	187.5	232.2	368.7	207.7	273.9	466.8	323.0	597.8	IE2	32.1
SDS 5370A	70	48.5	35	256.6	332.3	570.8	287.9	397.0	721.5	471.0	915.9	IE2	33.9
SDS 5450A	85	58.9	35	277.8	376.9	692.3	317.4	459.0	886.1	554.6	1143.1	IE2	35.3

Tab. 25: Power loss data of SDS 5000 inverter in accordance with EN 61800-9-2

General conditions

The loss data applies to inverters without accessories.

The power loss calculation is based on a three-phase supply voltage with 400 V_{AC}/50 Hz.

The calculated data includes a supplement of 10% in accordance with EN 61800-9-2.

The power loss specifications refer to a clock frequency of 4 kHz.

The absolute losses for a power unit that is switched off refer to the 24 V_{DC} power supply of the control electronics.

[13] Absolute losses for a power unit that is switched off

[14] Operating points for relative motor stator frequency in % and relative torque current in %

[15] IE class in accordance with EN 61800-9-2

[16] Comparison of the losses for the reference inverter related to IE2 in the nominal point (90, 100)

5.2.4.6 Power loss data of accessories

If the inverter needs to be ordered with accessory parts, the losses increase as follows:

Type	Absolute losses P_V [W]
ASP 5001 safety module	1
SEA 5001 terminal module	< 2
XEA 5001 terminal module	< 5
REA 5001 terminal module	< 5
CAN 5000 communication module	1
DP 5000 communication module	< 2
ECS 5000 communication module	< 2
PN 5000 communication module	< 4
BRM 5000 / BRS 5001 brake module	< 1

Tab. 26: Absolute losses in the accessories

Information

Note the absolute power loss of the encoder (usually < 3 W) and of the brake when designing as well.

Loss specifications for other optional accessories can be found in the technical data of the respective accessory part.

5.2.5 Derating by increasing the clock frequency

Depending on the clock frequency $f_{PWM,PU}$, the following values for nominal output currents $I_{2N,PU}$ arise. Note that only 8 kHz and 16 kHz can be set for the servo control type.

Type	$I_{2N,PU}$ 4 kHz	$I_{2N,PU}$ 8 kHz	$I_{2N,PU}$ 16 kHz
SDS 5007A	4 A	3 A	2 A
SDS 5008A	2.3 A	1.7 A	1.2 A
SDS 5015A	4.5 A	3.4 A	2.2 A
SDS 5040A	10 A	6 A	3.3 A
SDS 5075A	16 A	10 A	5.7 A
SDS 5110A	22 A	14 A	8.1 A
SDS 5150A	32 A	20 A	11.4 A
SDS 5220A	44 A	30 A	18.3 A
SDS 5370A	70 A	50 A	31.8 A
SDS 5450A	85 A	60 A	37.8 A

Tab. 27: Nominal output current $I_{2N,PU}$ dependent on the clock frequency

5.2.6 Dimensions

The dimensions of the available SDS 5000 sizes can be found in the following chapters.

5.2.6.1 Dimensions: sizes 0 to 2

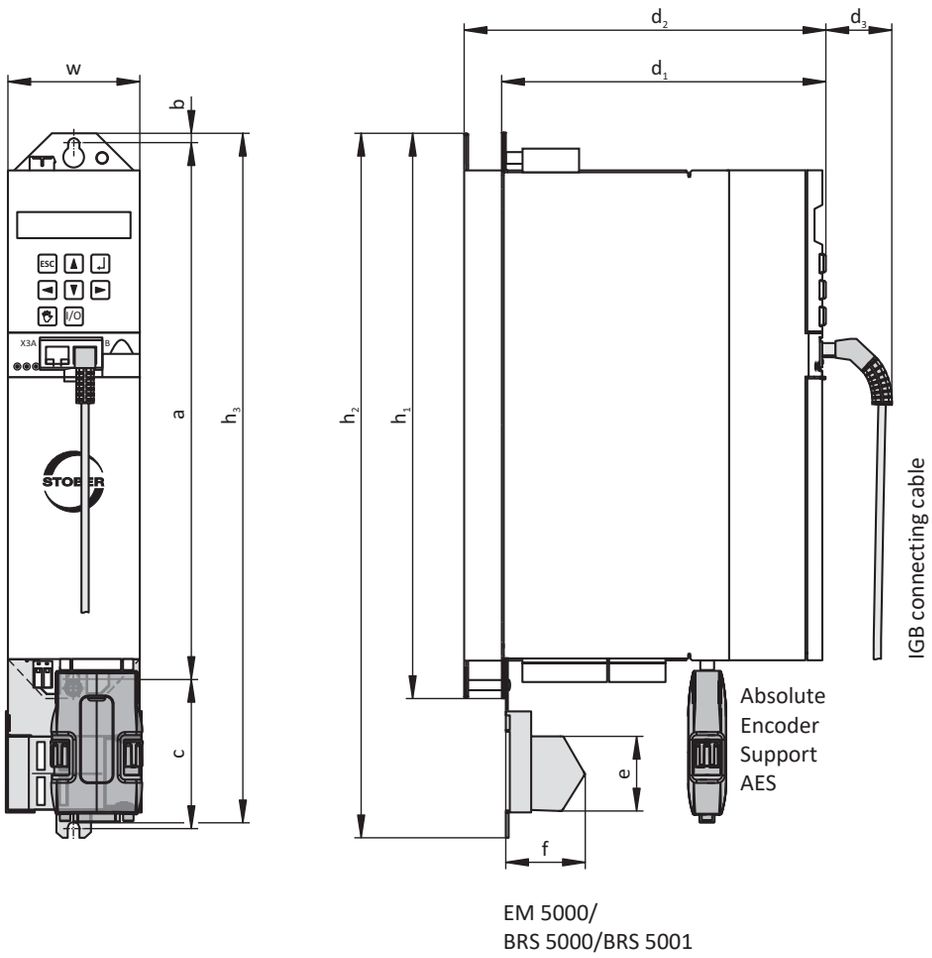

Fig. 1: SDS 5000 dimensional drawing, sizes 0 to 2

Dimensions [mm]			Size 0	Size 1	Size 2
Inverter	Height	h_1	300		
		h_2	360[17] / 373[18]		
		h_3[19]	365		
	Width	w	70		105
	Depth	d_1	175	260	260
		d_2[20]	193	278	278
		d_3	40		
EMC shroud	Height	e	37.5[21] / 44[22]		
	Depth	f	40		
Fastening holes	Vertical distance to the upper edge	b	6		
	Vertical distance	a	283+2		
	Vertical distance	c[23]	79		

Tab. 28: SDS 5000 dimensions, sizes 0 to 2 [mm]

[17] h2 = height incl. EMC shroud EM 5000
[18] h2 = height incl. brake module BRS 5001
[19] h3 = Height incl. AES
[20] d2 = Depth including RB 5000 brake resistor
[21] e = height of EM 5000 EMC shroud
[22] e = height of BRS 5001 brake module
[23] c = vertical distance with BRS 5001 brake module

5.2.6.2 Dimensions: size 3

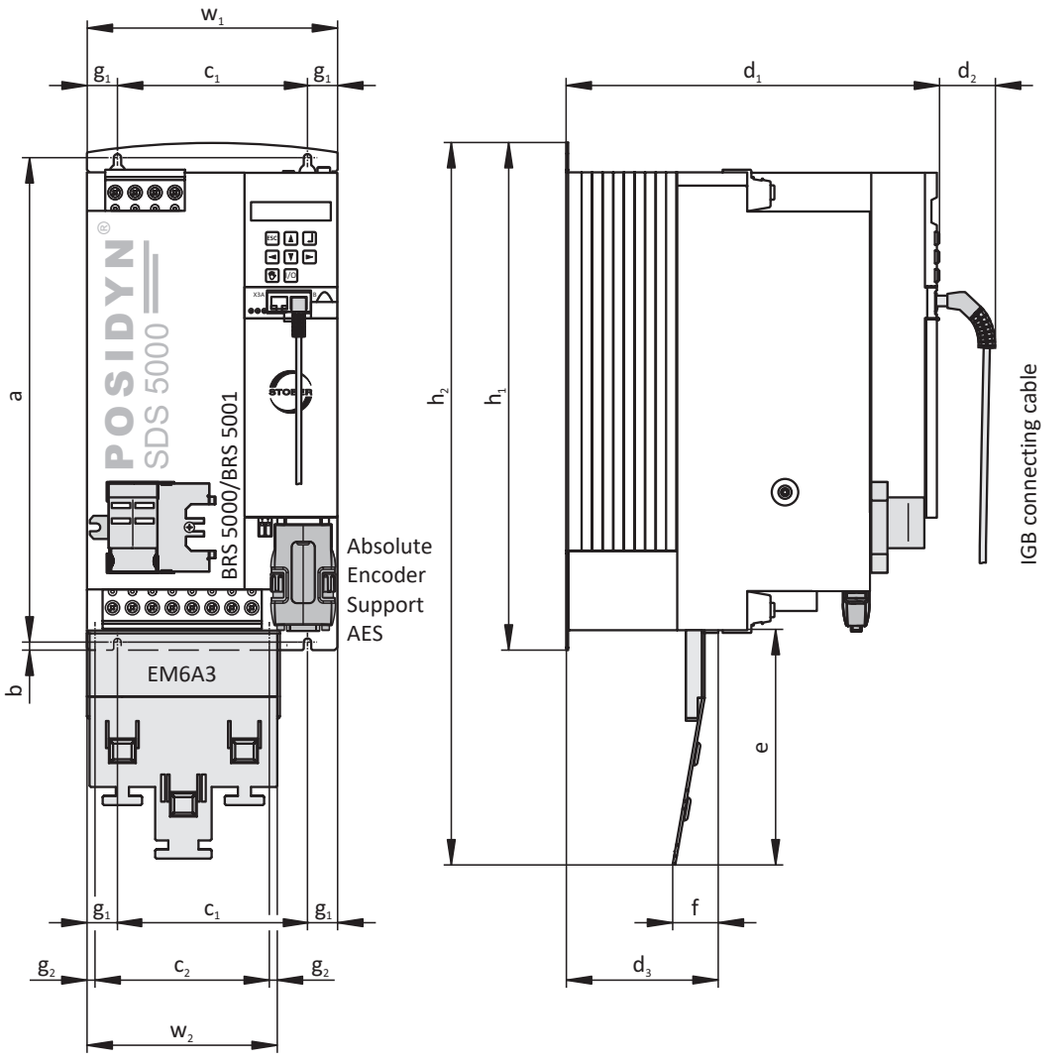

Fig. 2: SDS 5000 dimensional drawing, size 3

Dimensions [mm]			Size 3
Inverter	Height	h_1	382.5
		h_2[24]	540
	Width	w_1	194
	Depth	d_1	276
		d_2	40
EMC shroud	Height	e	174
	Width	w_2	147
	Depth	f	34
	Depth	d_3	113
Fastening holes	Vertical distance	a	365+2
	Vertical distance to the bottom edge	b	6
	Horizontal distance	c_1[25]	150+0.2/−0.2
	Horizontal distance to the side edge	g_1[26]	20
	Horizontal distance	c_2[27]	132
	Horizontal distance to the side edge	g_2[28]	7.5

Tab. 29: SDS 5000 dimensions, size 3 [mm]

[24] h2 = Height incl. EM6A3 EMC shroud

[25] c1 = Horizontal distance to the fastening holes of the inverter

[26] g1 = Horizontal distance to the side edge of the inverter

[27] c2 = Horizontal distance to the fastening holes of the EM6A3 EMC shroud

[28] g2 = Horizontal distance to the side edge of the EM6A3 EMC shroud

5.2.7 Minimum clearances

The specified dimensions refer to the outside edges of the inverter.

Minimum clearance	Above	Below	On the side
Size 0 – Size 2	100	100	5
... with EMC shroud or brake module	100	120	5
Size 3	100	100	5
... with EMC shroud	100	220	5

Tab. 30: Minimum clearances [mm]

5.3 Inverter/motor combination

An explanation of the symbols used for formulas can be found in Chapter [▸ 12.1].

EZ synchronous servo motor (n_N = 2000 rpm) – SDS 5000

						5007A	5008A	5015A	5040A	5075A	5110A	5150A	5220A	5370A	5450A
						$I_{2N,PU}$ [A] ($f_{PWM,PU}$ = 8 kHz)									
	K_{EM} [V/1000 rpm]	M_N [Nm]	I_N [A]	M_0 [Nm]	I_0 [A]	3	1.7	3.4	6	10	14	20	30	50	60
IC 410 convection cooling						$I_{2N,PU}$ / I_0									
EZ805U	142	43.7	25.9	66.1	37.9									1.3	1.6
IC 416 forced ventilation						$I_{2N,PU}$ / I_0									
EZ805B	142	77.2	45.2	94	53.9										1.1

EZ synchronous servo motor (n_N = 3000 rpm) – SDS 5000

						5007A	5008A	5015A	5040A	5075A	5110A	5150A	5220A	5370A	5450A
						$I_{2N,PU}$ [A] ($f_{PWM,PU}$ = 8 kHz)									
	K_{EM} [V/1000 rpm]	M_N [Nm]	I_N [A]	M_0 [Nm]	I_0 [A]	3	1.7	3.4	6	10	14	20	30	50	60
IC 410 convection cooling						$I_{2N,PU}$ / I_0									
EZ301U	40	0.93	1.99	0.95	2.02	1.5		1.7							
EZ302U	86	1.59	1.6	1.68	1.67		1.0	2.0							
EZ303U	109	2.07	1.63	2.19	1.71		1.0	2.0							
EZ401U	96	2.8	2.74	3	2.88			1.2							
EZ402U	94	4.7	4.4	5.2	4.8				1.3						
EZ404U	116	6.9	5.8	8.6	6.6					1.5					
EZ501U	97	4.3	3.74	4.7	4				1.5						
EZ502U	121	7.4	5.46	8	5.76				1.0	1.7					
EZ503U	119	9.7	6.9	11.1	7.67					1.3	1.8				
EZ505U	141	13.5	8.8	16	10					1.0	1.4	2.0			
EZ701U	95	7.4	7.2	8.3	8					1.3	1.8				
EZ702U	133	12	8.2	14.4	9.6					1.0	1.5				
EZ703U	122	16.5	11.4	20.8	14						1.0	1.4			
EZ705U	140	21.3	14.2	30.2	19.5							1.0	1.5		
EZ802U	136	22.3	13.9	37.1	22.3								1.3		
EZ803U	131	26.6	17.7	48.2	31.1									1.6	1.9

IC 416 forced ventilation						$I_{2N,PU}$ / I_0									
EZ401B	96	3.4	3.4	3.7	3.6				1.7						
EZ402B	94	5.9	5.5	6.3	5.8				1.0	1.7					
EZ404B	116	10.2	8.2	11.2	8.7					1.1	1.6				
EZ501B	97	5.4	4.7	5.8	5				1.2	2.0					
EZ502B	121	10.3	7.8	11.2	8.16					1.2	1.7				
EZ503B	119	14.4	10.9	15.9	11.8						1.2	1.7			
EZ505B	141	20.2	13.7	23.4	14.7						1.0	1.4			
EZ701B	95	9.7	9.5	10.5	10					1.0	1.4	2.0			
EZ702B	133	16.6	11.8	19.3	12.9						1.1	1.6			
EZ703B	122	24	18.2	28	20							1.0	1.5		
EZ705B	140	33.8	22.9	41.8	26.5								1.1	1.9	
EZ802B	136	34.3	26.5	47.9	28.9								1.0	1.7	
EZ803B	131	49	35.9	66.7	42.3									1.2	1.4

EZ synchronous servo motor (n_N = 4500 rpm) – SDS 5000

						5007A	5008A	5015A	5040A	5075A	5110A	5150A	5220A	5370A	5450A
						$I_{2N,PU}$ [A] ($f_{PWM,PU}$ = 8 kHz)									
	K_{EM} [V/1000 rpm]	M_N [Nm]	I_N [A]	M_0 [Nm]	I_0 [A]	3	1.7	3.4	6	10	14	20	30	50	60
IC 410 convection cooling						$I_{2N,PU}$ / I_0									
EZ505U	103	9.5	8.94	15.3	13.4						1.0	1.5			
EZ703U	99	12.1	11.5	20	17.8							1.1	1.7		
EZ705U	106	16.4	14.8	30	25.2								1.2	2.0	
EZ802U	90	10.5	11.2	34.5	33.3									1.5	1.8
IC 416 forced ventilation						$I_{2N,PU}$ / I_0									
EZ505B	103	16.4	16.4	22	19.4							1.0	1.5		
EZ703B	99	19.8	20.3	27.2	24.2								1.2		
EZ705B	106	27.7	25.4	39.4	32.8									1.5	1.8
EZ802B	90	30.6	30.5	47.4	45.1									1.1	1.3

EZ synchronous servo motor (n_N = 6000 rpm) – SDS 5000

						5007A	5008A	5015A	5040A	5075A	5110A	5150A	5220A	5370A	5450A
						$I_{2N,PU}$ [A] ($f_{PWM,PU}$ = 8 kHz)									
	K_{EM} [V/1000 rpm]	M_N [Nm]	I_N [A]	M_0 [Nm]	I_0 [A]	3	1.7	3.4	6	10	14	20	30	50	60
IC 410 convection cooling						$I_{2N,PU}$ / I_0									
EZ301U	40	0.89	1.93	0.95	2.02			1.7							
EZ302U	42	1.5	3.18	1.68	3.48				1.7						
EZ303U	55	1.96	3.17	2.25	3.55				1.7						
EZ401U	47	2.3	4.56	2.8	5.36				1.1	1.9					
EZ402U	60	3.5	5.65	4.9	7.43					1.3	1.9				
EZ404U	78	5.8	7.18	8.4	9.78					1.0	1.4	2.0			
EZ501U	68	3.4	4.77	4.4	5.8				1.0	1.7	2.4				
EZ502U	72	5.2	7.35	7.8	9.8					1.0	1.4	2.0			
EZ503U	84	6.2	7.64	10.6	11.6						1.2	1.7			
EZ701U	76	5.2	6.68	7.9	9.38					1.1	1.5				
EZ702U	82	7.2	8.96	14.3	16.5							1.2	1.8		

IC 416 forced ventilation						$I_{2N,PU}$ / I_0									
EZ401B	47	2.9	5.62	3.5	6.83					1.5	2.0				
EZ402B	60	5.1	7.88	6.4	9.34					1.1	1.5				
EZ404B	78	8	9.98	10.5	12						1.2	1.7			
EZ501B	68	4.5	6.7	5.7	7.5					1.3	1.9				
EZ502B	72	8.2	11.4	10.5	13.4						1.0	1.5			
EZ503B	84	10.4	13.5	14.8	15.9							1.3	1.9		
EZ701B	76	7.5	10.6	10.2	12.4						1.1	1.6			
EZ702B	82	12.5	16.7	19.3	22.1								1.4		

EZHD synchronous servo motor with hollow shaft and direct drive (n_N = 3000 rpm) – SDS 5000

						5007A	5008A	5015A	5040A	5075A	5110A	5150A	5220A	5370A	5450A
						$I_{2N,PU}$ [A] ($f_{PWM,PU}$ = 8 kHz)									
	K_{EM} [V/1000 rpm]	M_N [Nm]	I_N [A]	M_0 [Nm]	I_0 [A]	3	1.7	3.4	6	10	14	20	30	50	60
IC 410 convection cooling						$I_{2N,PU}$ / I_0									
EZHD0411U	96	1.9	2.36	2.6	2.89	1.0		1.2							
EZHD0412U	94	4.2	4.29	5.1	4.94				1.2						
EZHD0414U	116	7.7	6.3	8.5	6.88					1.5					
EZHD0511U	97	3	3.32	4.1	4.06				1.5						
EZHD0512U	121	7.0	5.59	7.8	6.13					1.6					
EZHD0513U	119	8.3	7.04	10.9	8.76					1.1	1.6				
EZHD0515U	141	14	9.46	16.4	11						1.3	1.8			
EZHD0711U	95	7.3	7.53	7.9	7.98					1.3	1.8				
EZHD0712U	133	11.6	8.18	14.4	9.99					1.0	1.4				
EZHD0713U	122	17.8	13.4	20.4	15.1							1.3	2.0		
EZHD0715U	140	24.6	17.2	31.1	21.1								1.4		

EZS synchronous servo motor for screw drive (driven threaded spindle) (n_N = 3000 rpm) – SDS 5000

						5007A	5008A	5015A	5040A	5075A	5110A	5150A	5220A	5370A	5450A
						$I_{2N,PU}$ [A] ($f_{PWM,PU}$ = 8 kHz)									
	K_{EM} [V/1000 rpm]	M_N [Nm]	I_N [A]	M_0 [Nm]	I_0 [A]	3	1.7	3.4	6	10	14	20	30	50	60
IC 410 convection cooling						$I_{2N,PU}$ / I_0									
EZS501U	97	3.85	3.65	4.3	3.95				1.5						
EZS502U	121	6.9	5.3	7.55	5.7				1.1	1.8					
EZS503U	119	9.1	6.7	10.7	7.6					1.3	1.8				
EZS701U	95	6.65	6.8	7.65	7.7					1.3	1.8				
EZS702U	133	11	7.75	13.5	9.25					1.1	1.5				
EZS703U	122	15.3	10.8	19.7	13.5						1.0	1.5			
IC 416 forced ventilation						$I_{2N,PU}$ / I_0									
EZS501B	97	5.1	4.7	5.45	5				1.2	2.0					
EZS502B	121	10	7.8	10.9	8.16					1.2	1.7				
EZS503B	119	14.1	10.9	15.6	11.8						1.2	1.7			
EZS701B	95	9.35	9.5	10.2	10					1.0	1.4	2.0			
EZS702B	133	16.3	11.8	19	12.9						1.1	1.6			
EZS703B	122	23.7	18.2	27.7	20							1.0	1.5		

EZM synchronous servo motor for screw drive (driven threaded nut) (n_N = 3000 rpm) – SDS 5000

						5007A	5008A	5015A	5040A	5075A	5110A	5150A	5220A	5370A	5450A
						$I_{2N,PU}$ [A] ($f_{PWM,PU}$ = 8 kHz)									
	K_{EM} [V/1000 rpm]	M_N [Nm]	I_N [A]	M_0 [Nm]	I_0 [A]	3	1.7	3.4	6	10	14	20	30	50	60
IC 410 convection cooling						$I_{2N,PU}$ / I_0									
EZM511U	97	3.65	3.55	4.25	4				1.5						
EZM512U	121	6.6	5.2	7.55	5.75				1.0	1.7					
EZM513U	119	8.8	6.55	10.6	7.6					1.3	1.8				
EZM711U	95	6.35	6.6	7.3	7.4					1.4	1.9				
EZM712U	133	10.6	7.5	13	8.9					1.1	1.6				
EZM713U	122	14.7	10.4	18.9	13						1.1	1.5			

5.4 Accessories

You can find information about the available accessories in the following chapters.

5.4.1 Safety technology

ASP 5001 – Safe Torque Off

Information

The drive controller is delivered in the standard design without safety technology. If you want a drive controller with integrated safety technology, you must order it together with the drive controller. The safety modules are an integrated part of the drive controller and must not be modified.

Available with the standard design.

Option module for implementation of integrated safety function Safe Torque Off (STO).

5.4.2 Communication

IGB connecting cable

Cable for connecting the interface X3A or X3B on the inverter front for IGB, CAT5e, magenta, connector angled at 45°.
The following versions are available:
ID No. 49855: 0.4 m.
ID No. 49856: 2 m.

PC connecting cables

ID No. 49857
Cable for connecting the X3A or X3B interface with the PC, CAT5e, blue, 5 m.

USB 2.0 Ethernet adapter

ID No. 49940
Adapter for connecting Ethernet to a USB port.

CANopen DS-301 CAN 5000 communication module

ID No. 44574
Accessory part for connecting CAN bus.

PROFIBUS DP-V1 DP 5000 communication module

ID No. 44575
Accessory module for connecting PROFIBUS DP-V1.

EtherCAT ECS 5000 communication module

ID No. 49014
Accessory part for connecting EtherCAT (CANopen over EtherCAT).

EtherCAT cables

Ethernet patch cable, CAT5e, yellow.
The following designs are available:
ID No. 49313: Length approx. 0.2 m.
ID No. 49314: Length approx. 0.35 m.

PROFINET PN 5000 communication module

ID No. 53893
Accessory part for connecting PROFINET.

5.4.3 Terminal module

SEA 5001 standard terminal module

ID No. 49576

Terminals:

- 2 analog inputs
- 2 analog outputs
- 5 digital inputs
- 2 digital outputs

XEA 5001 extended terminal module

ID No. 49015

Terminals:

- 3 analog inputs
- 2 analog outputs
- 13 digital inputs
- 10 digital outputs

Encoder / interfaces:

- TTL incremental encoder (simulation and evaluation)
- Pulse/direction interface (simulation and evaluation)
- SSI encoder (simulation and evaluation)

X120 SSI/TTL connection cable

ID No. 49482

Cable for connecting the X120 TTL interface on the SD6 drive controller (on terminal module RI6 or XI6) with the X301 interface on the LA6 adapter box in order to transfer Hall sensor signals. 0.3 m.

REA 5001 resolver terminal module

ID No. 49854

Terminals:

- 2 analog inputs
- 2 analog outputs
- 5 binary inputs
- 2 binary outputs

Encoder / interfaces:

- Resolver
- EnDat 2.1 sin/cos encoders
- TTL incremental encoder (simulation and evaluation)
- SSI encoder (simulation and evaluation)
- Pulse/direction interface (simulation and evaluation)

Resolver cables that were connected to an POSIDYN SDS 4000 can be connected using the resolver adapter (9-pin to 15-pin) included in the scope of delivery to terminal X140 of REA 5001.

5.4.4 Braking resistor

In addition to the inverters, STOBER offers braking resistors in different sizes and performance classes described below. For the selection, note the minimum permitted braking resistances specified in the technical data of the individual inverter types.

5.4.4.1 FZMU, FZZMU tubular fixed resistor

Type	FZMU 400×65			FZZMU 400×65		
ID No.	49010	55445	55446	53895	55447	55448
SDS 5007A	X	—	—	—	—	—
SDS 5008A	X	—	—	—	—	—
SDS 5015A	X	—	—	—	—	—
SDS 5040A	(X)	—	—	X	—	—
SDS 5075A	(X)	—	—	X	—	—
SDS 5110A	(—)	X	—	(X)	X	—
SDS 5150A	(—)	X	—	(X)	X	—
SDS 5220A	(—)	(X)	X	(—)	(X)	X
SDS 5370A	(—)	(X)	X	(—)	(X)	X
SDS 5450A	(—)	(X)	X	(—)	(X)	X

Tab. 31: Assignment of FZMU, FZZMU braking resistor – SDS 5000 inverter

X	Recommended
(X)	Possible
(—)	Useful under certain conditions
—	Not possible

Properties

Specification	FZMU 400×65			FZZMU 400×65		
ID No.	49010	55445	55446	53895	55447	55448
Type	Tubular fixed resistor			Tubular fixed resistor		
Resistance [Ω]	100	22	15	47	22	15
Power [W]	600			1200		
Therm. time const. τ_{th} [s]	40			40		
Pulse power for < 1 s [kW]	18			36		
U_{max} [V]	848			848		
Weight without packaging [g]	2200			4170		
Protection class	IP20			IP20		
Test symbols	c UL us CE			c UL us CE		

Tab. 32: FZMU, FZZMU specification

Dimensions

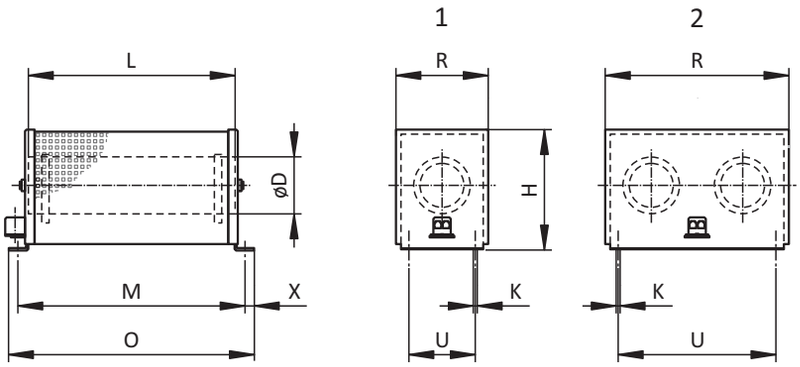

Fig. 3: FZMU (1), FZZMU (2) dimensional drawing

Dimension	FZMU 400×65			FZZMU 400×65		
ID No.	49010	55445	55446	53895	55447	55448
L x D	400 × 65			400 × 65		
H	120			120		
K	6.5 × 12			6.5 × 12		
M	430			426		
O	485			485		
R	92			185		
U	64			150		
X	10			10		

Tab. 33: FZMU, FZZMU dimensions [mm]

5.4.4.2 GVADU, GBADU flat resistor

Type	GVADU 210×20	GBADU 265×30	GBADU 405×30	GBADU 335×30	GBADU 265×30
ID No.	55441	55442	55499	55443	55444
SDS 5007A	X	X	X	—	—
SDS 5008A	X	X	X	—	—
SDS 5015A	X	X	X	—	—
SDS 5040A	(X)	(X)	(X)	X	—
SDS 5075A	(X)	(X)	(X)	X	—
SDS 5110A	(—)	(—)	(—)	(X)	X
SDS 5150A	(—)	(—)	(—)	(X)	X
SDS 5220A	(—)	(—)	(—)	(—)	(X)
SDS 5370A	(—)	(—)	(—)	(—)	(X)
SDS 5450A	(—)	(—)	(—)	(—)	(X)

Tab. 34: Assignment of GVADU, GBADU braking resistor – SDS 5000 inverters

X	Recommended
(X)	Possible
(—)	Useful under certain conditions
—	Not possible

Properties

Specification	GVADU 210×20	GBADU 265×30	GBADU 405×30	GBADU 335×30	GBADU 265×30
ID No.	55441	55442	55499	55443	55444
Type	Flat resistor	Flat resistor	Flat resistor	Flat resistor	Flat resistor
Resistance [Ω]	100	100	100	47	22
Power [W]	150	300	500	400	300
Therm. time const. τ_{th} [s]	60	60	60	60	60
Pulse power for < 1 s [kW]	3.3	6.6	11	8.8	6.6
U_{max} [V]	848	848	848	848	848
Cable design	Radox	FEP	FEP	FEP	FEP
Cable length [mm]	500	1500	500	1500	1500
Conductor cross-section [AWG]	18/19 (0.82 mm²)	14/19 (1.9 mm²)	14/19 (1.9 mm²)	14/19 (1.9 mm²)	14/19 (1.9 mm²)
Weight without packaging [g]	300	930	1410	1200	930
Protection class	IP54	IP54	IP54	IP54	IP54
Test symbols	c UL us CE	c UL us CE	c UL us CE	c UL us CE	c UL us CE

Tab. 35: GVADU, GBADU specification

Dimensions

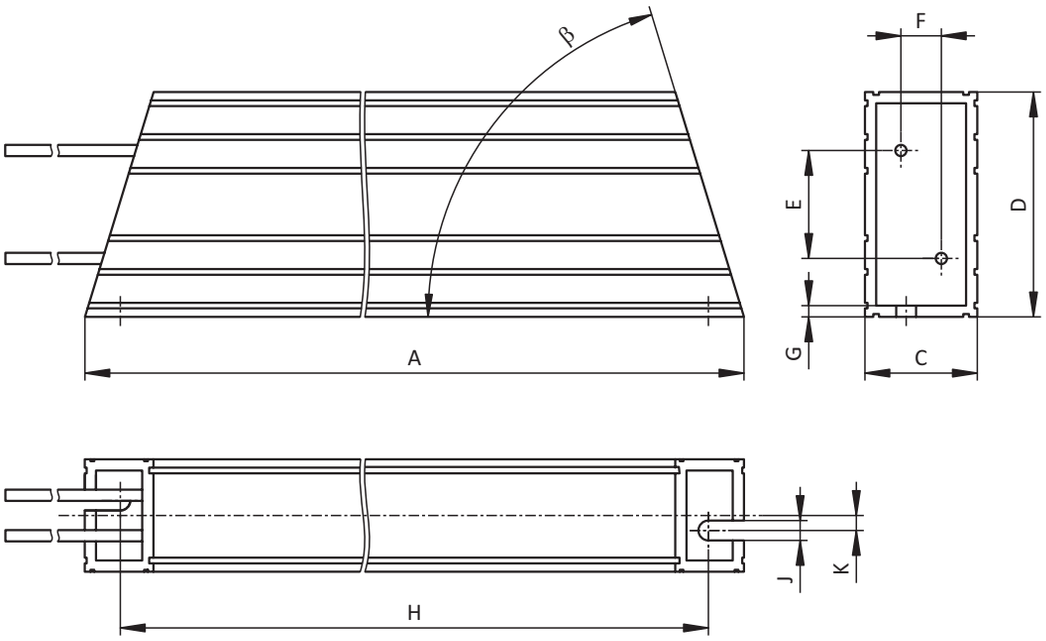

Fig. 4: GVADU, GBADU dimensional drawing

Dimension	GVADU 210×20	GBADU 265×30	GBADU 405×30	GBADU 335×30	GBADU 265×30
ID No.	55441	55442	55499	55443	55444
A	210	265	405	335	265
H	192	246	386	316	246
C	20	30	30	30	30
D	40	60	60	60	60
E	18.2	28.8	28.8	28.8	28.8
F	6.2	10.8	10.8	10.8	10.8
G	2	3	3	3	3
K	2.5	4	4	4	4
J	4.3	5.3	5.3	5.3	5.3
β	65°	73°	73°	73°	73°

Tab. 36: GVADU, GBADU dimensions [mm]

5.4.4.3 FGFKU steel-grid fixed resistor

Type	FGFKU 3100502	FGFKU 3100502	FGFKU 3111202	FGFKU 3121602
ID No.	55449	55450	55451	53897
SDS 5110A	X	—	—	—
SDS 5150A	X	—	—	—
SDS 5220A	(X)	X	X	X
SDS 5370A	(X)	X	X	X
SDS 5450A	(X)	X	X	X

Tab. 37: Assignment of FGFKU braking resistor – SDS 5000 inverter

X	Recommended
(X)	Possible
—	Not possible

Properties

Specification	FGFKU 3100502	FGFKU 3100502	FGFKU 3111202	FGFKU 3121602
ID No.	55449	55450	55451	53897
Type	Steel-grid fixed resistor			
Resistance [Ω]	22	15	15	15
Power [W]	2500	2500	6000	8000
Therm. time const. τ_{th} [s]	30	30	20	20
Pulse power for < 1 s [kW]	50	50	120	160
U_{max} [V]	848	848	848	848
Weight without packaging [g]	7500	7500	12000	18000
Protection class	IP20	IP20	IP20	IP20
Test symbols				

Tab. 38: FGFKU specification

Dimensions

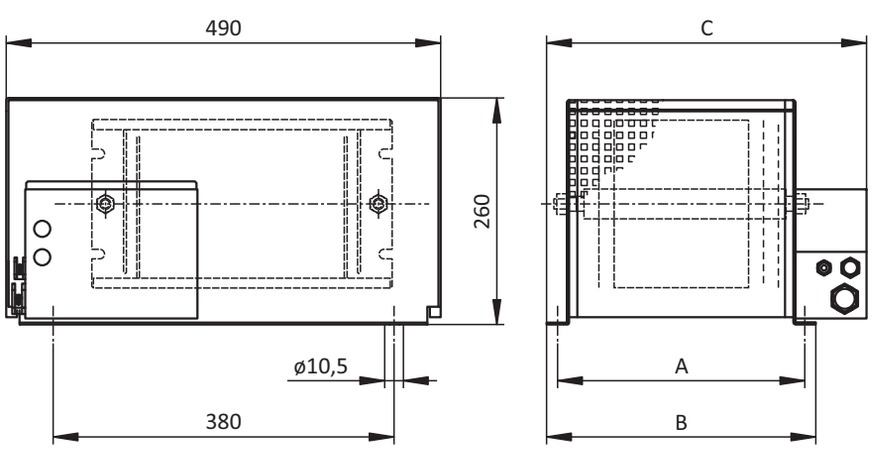

Fig. 5: FGFKU dimensional drawing

Dimension	FGFKU 3100502	FGFKU 3100502	FGFKU 3111202	FGFKU 3121602
ID No.	55449	55450	55451	53897
A	270	270	370	570
B	295	295	395	595
C	355	355	455	655

Tab. 39: FGFKU dimensions [mm]

5.4.4.4 RB 5000 rear section braking resistor

Type	RB 5022	RB 5047	RB 5100
ID No.	45618	44966	44965
SDS 5007A	—	—	X
SDS 5008A	—	—	X
SDS 5015A	—	—	X
SDS 5040A	—	X	(X)
SDS 5075A	—	X	(X)
SDS 5110A	X	—	—
SDS 5150A	X	—	—

Tab. 40: Assignment of RB 5000 braking resistor – SDS 5000 inverter

X	Recommended
(X)	Possible
—	Not possible

Properties

Specification	RB 5022	RB 5047	RB 5100
ID No.	45618	44966	44965
Resistance [Ω]	22	47	100
Power [W]	100	60	60
Therm. time const. τ_{th} [s]	8	8	8
Pulse power for < 1 s [kW]	1.5	1.0	1.0
U_{max} [V]	800	800	800
Weight without packaging [g]	640	460	440
Cable design	Radox	Radox	Radox
Cable length [mm]	250	250	250
Conductor cross-section [AWG]	18/19 (0.82 mm²)	18/19 (0.82 mm²)	18/19 (0.82 mm²)
Maximum torque of M5 threaded bolts [Nm]	5	5	5
Protection class	IP40	IP40	IP40
Test symbols	c UL us CE	c UL us CE	c UL us CE

Tab. 41: RB 5000 specification

Dimensions

Dimension	RB 5022	RB 5047	RB 5100
ID No.	45618	44966	44965
Height	300	300	300
Width	94	62	62
Depth	18	18	18
Drilling diagram corresponds to size	Size 2	Size 1	Size 0 and Size 1

Tab. 42: RB 5000 dimensions [mm]

5.4.5 Choke

Technical specifications for suitable chokes can be found in the following chapters.

5.4.5.1 TEP output choke

Output chokes are required for connecting size 0 to 2 drive controllers from a cable length > 50 m in order to reduce interference pulses and protect the drive system.

Information

The following technical data only applies to a rotating magnetic field frequency of 200 Hz. For example, this rotating magnetic field frequency is achieved with a motor with 4 pole pairs and a nominal speed of 3000 rpm. Always observe the specified derating for higher rotating magnetic field frequencies. Also observe the relationship with the clock frequency.

Properties

Specification	TEP3720-0ES41	TEP3820-0CS41	TEP4020-0RS41
ID No.	53188	53189	53190
Voltage range	3 × 0 to 480 V_{AC}		
Frequency range	0 – 200 Hz		
Nominal current $I_{N,MF}$ at 4 kHz	4 A	17.5 A	38 A
Nominal current $I_{N,MF}$ at 8 kHz	3.3 A	15.2 A	30.4 A
Max. permitted motor cable length with output choke	100 m		
Max. surrounding temperature $\vartheta_{amb,max}$	40 °C		
Protection class	IP00		
Winding losses	11 W	29 W	61 W
Iron losses	25 W	16 W	33 W
Connection	Screw terminal		
Max. conductor cross-section	10 mm²		
UL Recognized Component (CAN; USA)	Yes		
Test symbols	c UL us CE		

Tab. 43: TEP specification

Dimensions

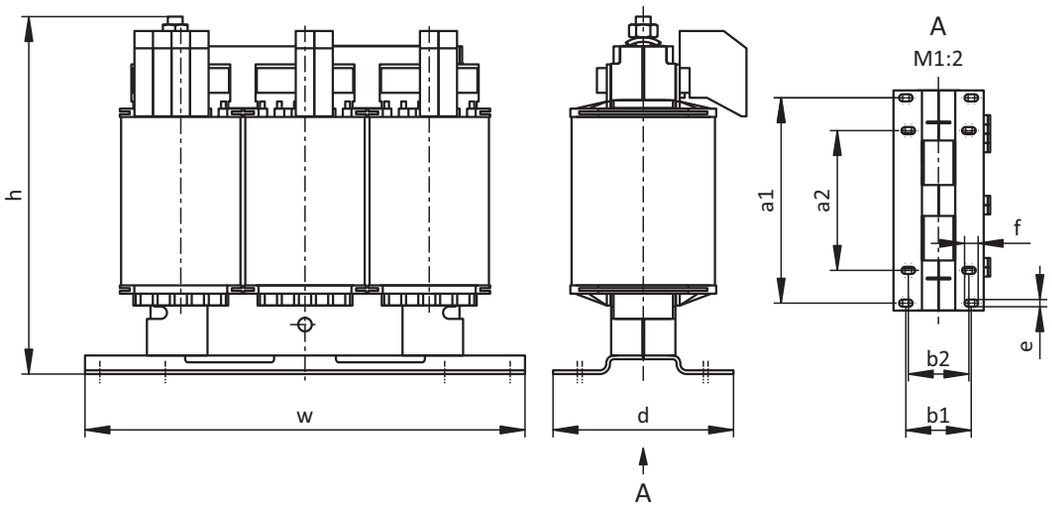

Fig. 6: TEP dimensional drawing

Dimension	TEP3720-0ES41	TEP3820-0CS41	TEP4020-0RS41
Height h [mm]	Max. 153	Max. 153	Max. 180
Width w [mm]	178	178	219
Depth d [mm]	73	88	119
Vertical distance – Fastening holes a1 [mm]	166	166	201
Vertical distance – Fastening holes a2 [mm]	113	113	136
Horizontal distance – Fastening holes b1 [mm]	53	68	89
Horizontal distance – Fastening holes b2 [mm]	49	64	76
Drill holes – Depth e [mm]	5.8	5.8	7
Drill holes – Width f [mm]	11	11	13
Screw connection – M	M5	M5	M6
Weight without packaging [g]	2900	5900	8800

Tab. 44: TEP dimensions and weight

5.4.6 Brake module and EMC shroud

BRS 5001 brake module

ID No. 56519
Brake module for inverters of the SDS 5000 series.
Accessory part for direct control of up to two brakes (24 V_{DC}) and (for inverters up to size 2) for connecting to the shield of the power cable.
Can be attached to the basic housing.
Including connection cable for basic device and shield connection terminal.

EM 5000 EMC shroud

ID No. 44959
EMC shroud for servo inverters of generation 5.
Accessory part for shield connection of the power cable for inverters up to size 2.
Can be attached to the basic housing.
Including shield connection terminal.

EMC shroud EM6A3

ID No. 56521
EMC shroud for drive controllers of the MDS 5000, SDS 5000 and SD6 series.
Accessory part for shield connection of the power cable for drive controllers up to size 3.
Can be attached to the basic housing.
Including shield connection terminal.
If necessary you can also connect the cable shield of the braking resistor and DC link connection to the shroud.

5.4.7 Axis switcher

POSISwitch AX 5000 4-way axis switcher

ID No. 49578
Axis switcher for MDS 5000 and SDS 5000 series inverters.
Enables the operation of up to four synchronous servo motors on one inverter.

LA6 / AX 5000 connection cable

Cable to connect inverter and POSISwitch AX 5000 axis switcher.
The following versions are available:
ID No. 45405: 0.5 m.
ID No. 45386: 2.5 m.

5.4.8 Encoder battery module

Absolute Encoder Support (AES)

ID No. 55452
Battery module for buffering the supply voltage when using the EnDat 2.2 digital inductive encoder with battery-buffered multi-turn stage, for example EBI1135 or EBI135.
A battery is included.

AES replacement battery

ID No. 55453
Replacement battery for AES battery module.

5.4.9 Removable data storage

Paramodul removable data storage

Included in the standard version.

ID No. 55464
Memory module for configuration and parameters.

5.5 Further information

5.5.1 Directives and standards

The following European directives and standards are relevant for inverters:

- Machinery Directive 2006/42/EC
- Low Voltage Directive 2014/35/EU
- EMC Directive 2014/30/EU
- EN 61326-3-1:2008
- EN 61800-3:2012-09 and 1:2014-02
- EN 61800-5-1:2008-04 and 1:2010-04
- EN 61800-5-2:2016-04
- EN 50178:1997

5.5.2 Symbols, marks and test symbols

Grounding symbol
Grounding symbol in accordance with IEC 60417, symbol 5019.

RoHS lead-free mark
Marking in accordance with RoHS directive 2011-65-EU.

CE mark
Manufacturer's self declaration: The product meets the requirements of EU directives.

UL test symbol
This product is listed by UL for the United States and Canada. Representative samples of this product have been evaluated by UL and meet the requirements of applicable standards.

UL recognized component mark
This component or material is recognized by UL. Representative samples of this product have been evaluated by UL and meet applicable requirements.

5.5.3 Additional documentation

Additional documentation related to the product can be found at
http://www.stoeber.de/en/downloads/

Enter the ID of the documentation in the Search... field.

Documentation	ID
Configuration manual for POSIDYN SDS 5000 servo inverters	442277

6 Connection method

Table of contents

6.1 Overview 158

6.2 Conventions for cables 159

6.3 Power cables 159

6.3.1 Motor assignment 159

6.3.2 Connection description 162

6.4 Encoder cables 165

6.4.1 EnDat 2.1/2.2 digital encoders 165

6.4.2 EnDat 2.1 sin/cos encoders 168

6.4.3 Resolver 170

6.5 One Cable Solution EnDat 3 172

6.5.1 Motor assignment 172

6.5.2 Connection description 174

6.6 Additional documentation 175

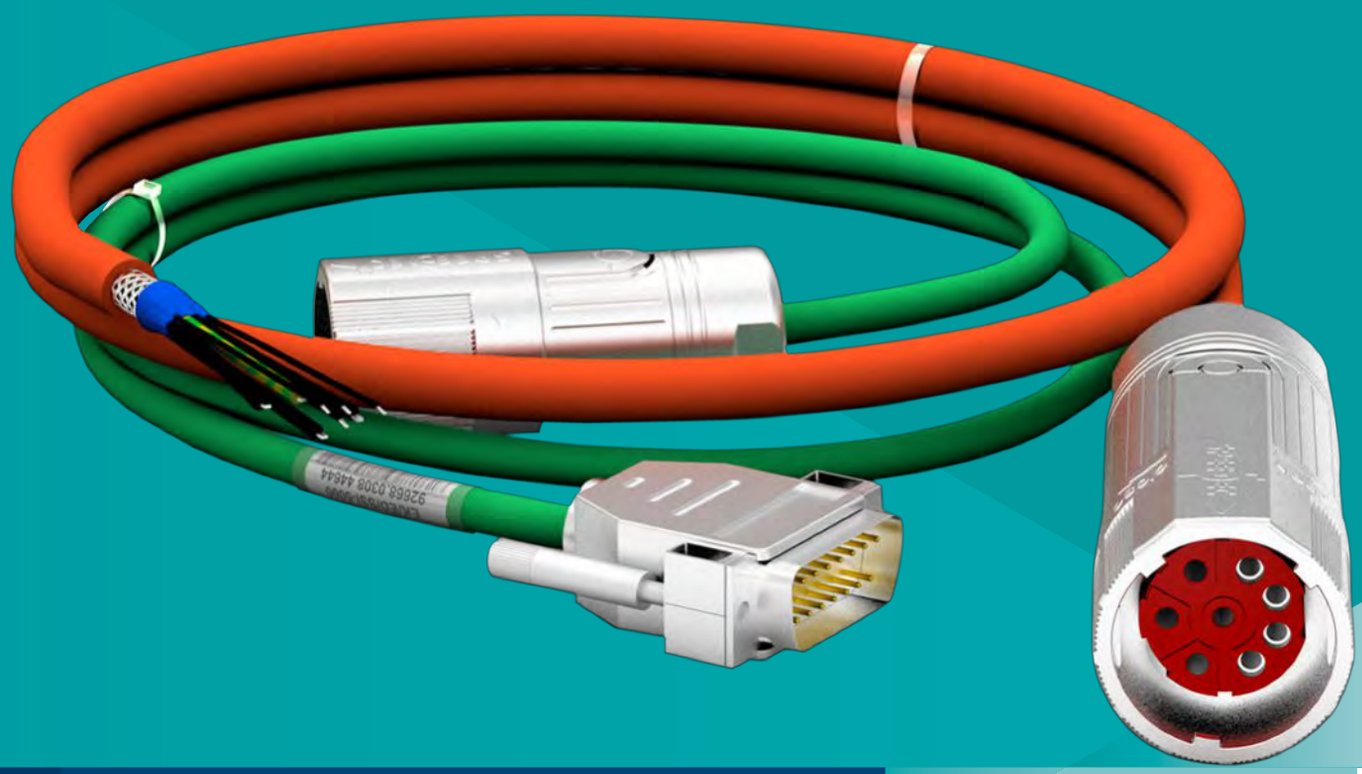

6 Connection method

6.1 Overview

Coordinated connection methods for STOBER drive controllers

Features

- Torsional stress ±30°/m
- Bending resistance
- Oil resistance
- Chemical resistance

A drive controller, cable and motor that are not coordinated with one another can lead to impermissibly high voltage peaks in the drive system, which may cause damage to the motor. The legal requirements of (EMC) Directive 2014/30/EU must also be observed.

Combining STOBER motors, STOBER cables and STOBER drive controllers enables you to comply with these legal requirements.

STOBER offers a range of cables to match. Cables are available in different lengths and are ready-made on both ends.

Using unsuitable connection cables may void any claims made under the warranty.

6.2 Conventions for cables

In the cable connection descriptions, core colors are shortened and used as follows.

Cable colors

BK:	BLACK	PK:	PINK
BN:	BROWN	RD:	RED
BU:	BLUE	VT:	VIOLET
GN:	GREEN	WH:	WHITE
GY:	GRAY	YE:	YELLOW
OG:	ORANGE		

Formatting conventions

Two-colored core:	WHYE	WHITEYELLOW (white and yellow)
Single-colored core:	BK/BN	BLACK/BROWN (black or brown)

6.3 Power cables

STOBER synchronous servo motors are equipped with plug connectors as standard.

STOBER provides suitable cables in various lengths, conductor cross-sections and connector sizes.

The cables are available ready-made in the lengths 2.5 m, 5.0 m, 7.5 m, 10.0 m, 12.5 m, 15.0 m, 18.0 m, 20.0 m, 25.0 m, 30.0 m.
Other lengths on request.

6.3.1 Motor assignment

STOBER offers cables with a minimum cross-section for the motors as standard. Depending on the application, however, larger conductor cross-sections may be required. For this reason, take into account the following points in addition for dimensioning the cable:

- Stall current I_0 of the motor
- Permitted current carrying capacity of the conductors
- Cable length
- Terminal specifications of the drive controller or output choke
- Connector size of the motor

EZ motors – IC 410 convection cooling

	n_N 2000 rpm			n_N 3000 rpm			n_N 4500 rpm			n_N 6000 rpm		
	K_{EM} V/1000 rpm	Plug con. size	Minimum cross-section mm²	K_{EM} V/1000 rpm	Plug con. size	Minimum cross-section mm²	K_{EM} V/1000 rpm	Plug con. size	Minimum cross-section mm²	K_{EM} V/1000 rpm	Plug con. size	Minimum cross-section mm²
EZ301U	—	—	—	40	con.15	1.0	—	—	—	40	con.15	1.0
EZ302U	—	—	—	86	con.15	1.0	—	—	—	42	con.15	1.0
EZ303U	—	—	—	109	con.15	1.0	—	—	—	55	con.15	1.0
EZ401U	—	—	—	96	con.23	1.5	—	—	—	47	con.23	1.5
EZ402U	—	—	—	94	con.23	1.5	—	—	—	60	con.23	1.5
EZ404U	—	—	—	116	con.23	1.5	—	—	—	78	con.23	1.5
EZ501U	—	—	—	97	con.23	1.5	—	—	—	68	con.23	1.5
EZ502U	—	—	—	121	con.23	1.5	—	—	—	72	con.23	1.5
EZ503U	—	—	—	119	con.23	1.5	—	—	—	84	con.23	1.5
EZ505U	—	—	—	141	con.23	1.5	103	con.23	1.5	—	—	—
EZ701U	—	—	—	95	con.23	1.5	—	—	—	76	con.23	1.5
EZ702U	—	—	—	133	con.23	1.5	—	—	—	82	con.23	2.5
EZ703U	—	—	—	122	con.23	1.5	99	con.23	2.5	—	—	—
EZ705U	—	—	—	140	con.40	2.5	106	con.40	4.0	—	—	—
EZ802U	—	—	—	136	con.40	4.0	90	con.40	6.0	—	—	—
EZ803U	—	—	—	131	con.40	6.0	—	—	—	—	—	—
EZ805U	142	con.40	10.0	—	—	—	—	—	—	—	—	—

Tab. 1: Plug connector size and minimum cross-section, EZ synchronous servo motors with convection cooling

EZ motors – IC 416 forced ventilation

	n_N 2000 rpm			n_N 3000 rpm			n_N 4500 rpm			n_N 6000 rpm		
	K_{EM} V/1000 rpm	Plug con. size	Minimum cross-section mm²	K_{EM} V/1000 rpm	Plug con. size	Minimum cross-section mm²	K_{EM} V/1000 rpm	Plug con. size	Minimum cross-section mm²	K_{EM} V/1000 rpm	Plug con. size	Minimum cross-section mm²
EZ401B	—	—	—	96	con.23	1.5	—	—	—	47	con.23	1.5
EZ402B	—	—	—	94	con.23	1.5	—	—	—	60	con.23	1.5
EZ404B	—	—	—	116	con.23	1.5	—	—	—	78	con.23	1.5
EZ501B	—	—	—	97	con.23	1.5	—	—	—	68	con.23	1.5
EZ502B	—	—	—	121	con.23	1.5	—	—	—	72	con.23	1.5
EZ503B	—	—	—	119	con.23	1.5	—	—	—	84	con.23	2.5
EZ505B	—	—	—	141	con.23	1.5	103	con.23	2.5	—	—	—
EZ701B	—	—	—	95	con.23	1.5	—	—	—	76	con.23	1.5
EZ702B	—	—	—	133	con.23	1.5	—	—	—	82	con.23	4.0
EZ703B	—	—	—	122	con.23	2.5	99	con.23	4.0	—	—	—
EZ705B	—	—	—	140	con.40	4.0	106	con.40	6.0	—	—	—
EZ802B	—	—	—	136	con.40	6.0	90	con.40	10.0	—	—	—
EZ803B	—	—	—	131	con.40	10.0	—	—	—	—	—	—
EZ805B	142	con.58	16.0	—	—	—	—	—	—	—	—	—

Tab. 2: Plug connector size and minimum cross-section, EZ synchronous servo motors with forced ventilation

EZHD motors – IC 410 convection cooling

	n_N 3000 rpm		
	K_{EM} V/1000 rpm	Plug con. size	Minimum cross-section mm²
EZHD0411U	96	con.23	1.5
EZHD0412U	94	con.23	1.5
EZHD0414U	116	con.23	1.5
EZHD0511U	97	con.23	1.5
EZHD0512U	121	con.23	1.5
EZHD0513U	119	con.23	1.5
EZHD0515U	141	con.23	1.5
EZHD0711U	95	con.23	1.5
EZHD0712U	133	con.23	1.5
EZHD0713U	122	con.23	2.5
EZHD0715U	140	con.40	4.0

Tab. 3: Plug connector size and minimum cross-section, EZHD synchronous servo motors with convection cooling

Assignment of EZS motors – IC 410 convection cooling

	n_N 3000 rpm		
	K_{EM} V/1000 rpm	Plug con. size	Minimum cross-section mm²
EZS501U	97	con.23	1.5
EZS502U	121	con.23	1.5
EZS503U	119	con.23	1.5
EZS701U	95	con.23	1.5
EZS702U	133	con.23	1.5
EZS703U	122	con.23	1.5

Tab. 4: Plug connector size and minimum cross-section, EZS synchronous servo motors with convection cooling

Assignment of EZS motors – IC 416 forced ventilation

	n_N 3000 rpm		
	K_{EM} V/1000 rpm	Plug con. size	Minimum cross-section mm²
EZS501B	97	con.23	1.5
EZS502B	121	con.23	1.5
EZS503B	119	con.23	1.5
EZS701B	95	con.23	1.5
EZS702B	133	con.23	1.5
EZS703B	122	con.23	2.5

Tab. 5: Plug connector size and minimum cross-section, EZS synchronous servo motors with forced ventilation

Assignment of EZM motors – IC 410 convection cooling

	n_N 3000 rpm		
	K_{EM} V/1000 rpm	Plug con. size	Minimum cross-section mm²
EZM511U	97	con.23	1.5
EZM512U	121	con.23	1.5
EZM513U	119	con.23	1.5
EZM711U	95	con.23	1.5
EZM712U	133	con.23	1.5
EZM713U	122	con.23	1.5

Tab. 6: Plug connector size and minimum cross-section, EZM synchronous servo motors with convection cooling

6.3.2 Connection description

Depending on the size of the motor plug connector, power cables are available in the following designs:

- Quick lock for con.15
- speedtec quick lock for con.23 and con.40
- Screw technology for con.58

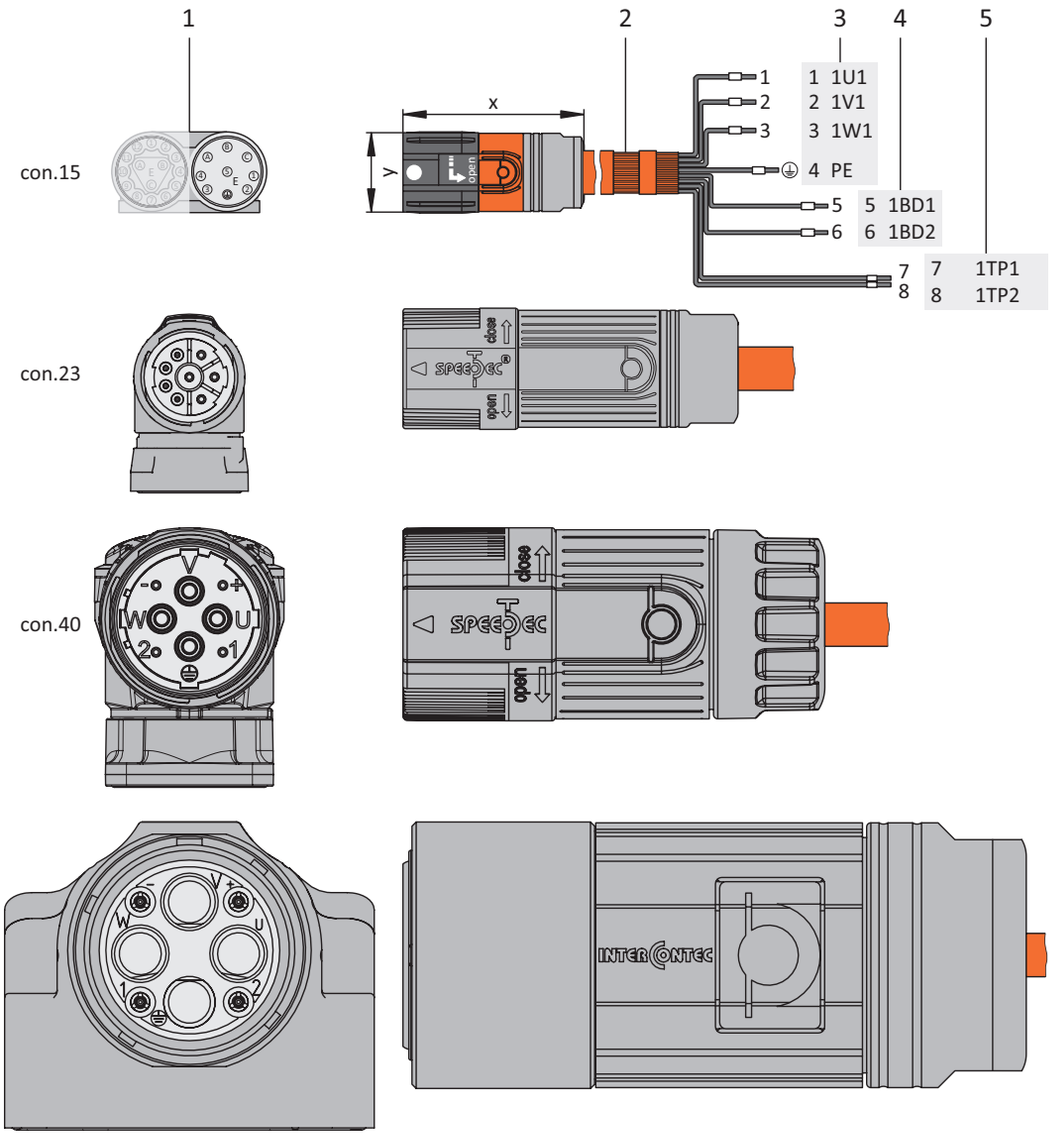

con.58

1: Plug connectors

2: STOBER power cable, cable shield

3: Connection to terminal X20, motor

4: Connection of terminal X2/X5, brake

5: Connection to terminal X2, temperature sensor

Information

The design of the cable shield connection on the controller side depends on the drive controller series.

Connection	Size 0 to 2	Size 3
Without output choke	50 m, shielded	100 m, shielded
With output choke	100 m, shielded	—

Tab. 7: Maximum cable length of the power cable [m]

Power cables – con.15 plug connector

Motor (1)				Cable (2)	Drive controller (3) – (5)		
Motor connection diagram	Pin	Designation	Int. motor Core color	Core No./ Core color	Pin X20	Pin X2/X5	Pin X2
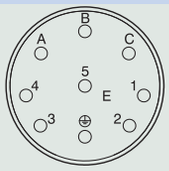	A	1U1	BK	1	1	—	—
	B	1V1	BU	2	2	—	—
	C	1W1	RD	3	3	—	—
	1	1TP1	BK/RD[a)]	7	—	—	7
	2	1TP2	WH[a)]	8	—	—	8
	3	1BD1	RD	5	—	5	—
	4	1BD2	BK	6	—	6	—
	5	—	—	—	—	—	—
	⏚	PE	GNYE	GNYE	4	—	—
	Housing	Shield	—	—	Shield contact	—	—

Tab. 8: con.15 power cable pin assignment

a) Color depends on the type of temperature sensor (PTC/Pt1000), which is specified on the motor nameplate.

Length x [mm]	Diameter y [mm]
42	18.7

Tab. 9: con.15 connector dimensions

Power cables – con.23 plug connector

Motor (1)				Cable (2)	Drive controller (3) – (5)		
Motor connection diagram	Pin	Designation	Int. motor Core color	Core No./ Core color	Pin X20	Pin X2/X5	Pin X2
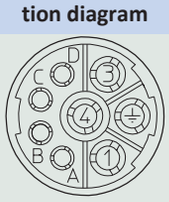	1	1U1	BK	1	1	—	—
	3	1V1	BU	2	2	—	—
	4	1W1	RD	3	3	—	—
	A	1BD1	RD	5	—	5	—
	B	1BD2	BK	6	—	6	—
	C	1TP1	BK/RD[a)]	7	—	—	7
	D	1TP2	WH[a)]	8	—	—	8
	⏚	PE	GNYE	GNYE	4	—	—
	Housing	Shield	—	—	Shield contact	—	—

Tab. 10: con.23 power cable pin assignment

a) Color depends on the type of temperature sensor (PTC/Pt1000), which is specified on the motor nameplate.

Length x [mm]	Diameter y [mm]
78	26

Tab. 11: con.23 connector dimensions

Power cables – con.40 plug connector

Motor (1)				Cable (2)	Drive controller (3) – (5)		
Motor connection diagram	Pin	Designation	Int. motor Core color	Core No./ Core color	Pin X20	Pin X2/X5	Pin X2
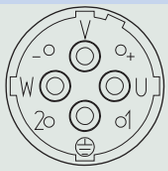	U	1U1	BK	1	1	—	—
	V	1V1	BU	2	2	—	—
	W	1W1	RD	3	3	—	—
	+	1BD1	RD	5	—	5	—
	–	1BD2	BK	6	—	6	—
	1	1TP1	BK/RD[a)]	7	—	—	7
	2	1TP2	WH[a)]	8	—	—	8
	⏚	PE	GNYE	GNYE	4	—	—
	Housing	Shield	—	—	Shield contact	—	—

Tab. 12: con.40 power cable pin assignment

a) Color depends on the type of temperature sensor (PTC/Pt1000), which is specified on the motor nameplate.

Length x [mm]	Diameter y [mm]
99	46

Tab. 13: con.40 connector dimensions

Power cables – con.58 plug connector

Motor (1)				Cable (2)	Drive controller (3) – (5)		
Motor connection diagram	Pin	Designation	Int. motor Core color	Core No./ Core color	Pin X20	Pin X2/X5	Pin X2
	U	1U1	BK	1	1	—	—
	V	1V1	BU	2	2	—	—
	W	1W1	RD	3	3	—	—
	+	1BD1	RD	5	—	5	—
	–	1BD2	BK	6	—	6	—
	1	1TP1	BK/RD[a)]	7	—	—	7
	2	1TP2	WH[a)]	8	—	—	8
	⏚	PE	GNYE	GNYE	4	—	—
	Housing	Shield	—	—	Shield contact	—	—

Tab. 14: con.58 power cable pin assignment

a) Color depends on the type of temperature sensor (PTC/Pt1000), which is specified on the motor nameplate.

Length x [mm]	Diameter y [mm]
146	63.5

Tab. 15: con.58 connector dimensions

6.4 Encoder cables

STOBER motors are equipped with encoder systems and plug connectors as standard.

STOBER provides suitable cables in various lengths, conductor cross-sections and connector sizes.

The cables are available ready-made in the lengths 2.5 m, 5.0 m, 7.5 m, 10.0 m, 12.5 m, 15.0 m, 18.0 m, 20.0 m, 25.0 m, 30.0 m.
Other lengths on request.

6.4.1 EnDat 2.1/2.2 digital encoders

Suitable encoder cables are described below.

6.4.1.1 Connection description

Depending on the size of the motor plug connector, encoder cables are available in the following designs:

- Quick lock for con.15
- speedtec quick lock for con.17

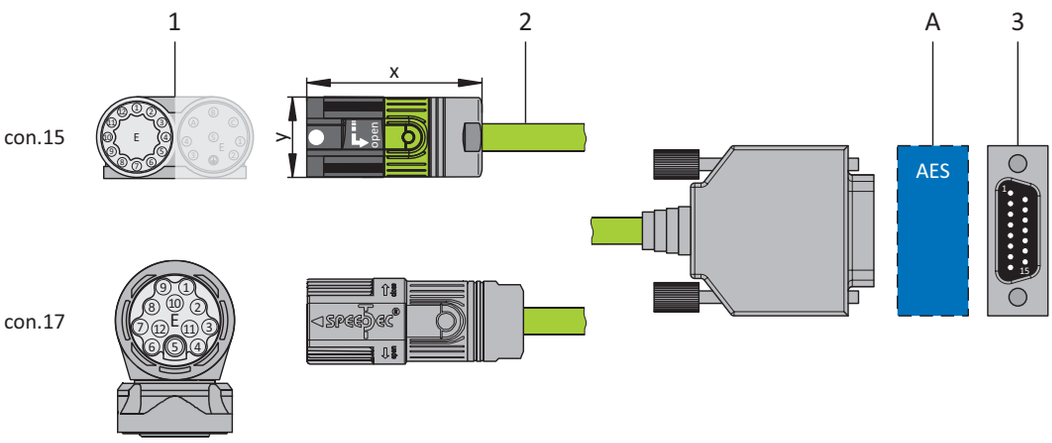

1: Plug connector

2: STOBER encoder cable

A: Optional Absolute Encoder Support battery module (AES)

3: D-sub X4/X140

Encoder cables – con.15 plug connectors

The power supply is buffered for EnDat 2.2 digital "EBI 1135" and "EBI 135" inductive encoders with a multi-turn function. In this case, pin 2 and pin 3 of the motor are assigned to the U_{2BAT} buffer battery. Note that the encoder cable must not be connected to the encoder interface of the drive controller, but rather to the AES battery module for these encoders.

Motor (1)				Cable (2)	Drive controller (3)
Connection diagram	Pin	Designation	Core color	Core color	Pin X4/X140
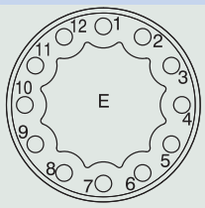	1	Clock +	VT	YE	8
	2	U_2 Sense	BNGN	PK	12
	3	U_{2BAT+} [1]	BU	GY	3
		—	—		
		U_{2BAT-} [2]	WH		
	4	—	—	—	—
	5	Data –	PK	BN	13
	6	Data +	GY	WH	5
	7	—	—	—	—
	8	Clock –	YE	GN	15
	9	—	—	—	—
	10	0 V GND	WHGN	BU	2
	11	—	—	—	—
	12	U_2	BNGN	RD	4
	Housing	Shield	—	—	Housing

Tab. 16: con.15 encoder cable pin assignment, EnDat 2.1/2.2 digital

Length x [mm]	Diameter y [mm]
42	18.7

Tab. 17: con.15 connector dimensions

[1] Only relevant for EBI encoders

[2] Only relevant for EBI encoders

Encoder cables – con.17 plug connectors

The power supply is buffered for EnDat 2.2 digital "EBI 1135" and "EBI 135" inductive encoders with a multi-turn function. In this case, pin 2 and pin 3 of the motor are assigned to the U_{2BAT} buffer battery. Note that the encoder cable must not be connected to the encoder interface of the drive controller, but rather to the AES battery module for these encoders.

Motor (1)				Cable (2)	Drive controller (3)
Connection diagram	Pin	Designation	Core color	Core color	Pin X4/X140
	1	Clock +	VT	YE	8
	2	U_2 Sense	BNGN	PK	12
	3	U_{2BAT+} [3]	BU	GY	3
		—	—		
		U_{2BAT-} [4]	WH		
	4	—	—	—	—
	5	Data –	PK	BN	13
	6	Data +	GY	WH	5
	7	—	—	—	—
	8	Clock –	YE	GN	15
	9	—	—	—	—
	10	0 V GND	WHGN	BU	2
	11	—	—	—	—
	12	U_2	BNGN	RD	4
	Housing	Shield	—	—	Housing

Tab. 18: con.17 encoder cable pin assignment, EnDat 2.1/2.2 digital

Length x [mm]	Diameter y [mm]
56	22

Tab. 19: con.17 connector dimensions

[3] Only relevant for EBI encoders

[4] Only relevant for EBI encoders

6.4.2 EnDat 2.1 sin/cos encoders

Suitable encoder cables are described below.

6.4.2.1 Connection description

Depending on the size of the motor plug connector, encoder cables are available in the following designs:

- Quick lock for con.15
- speedtec quick lock for con.17

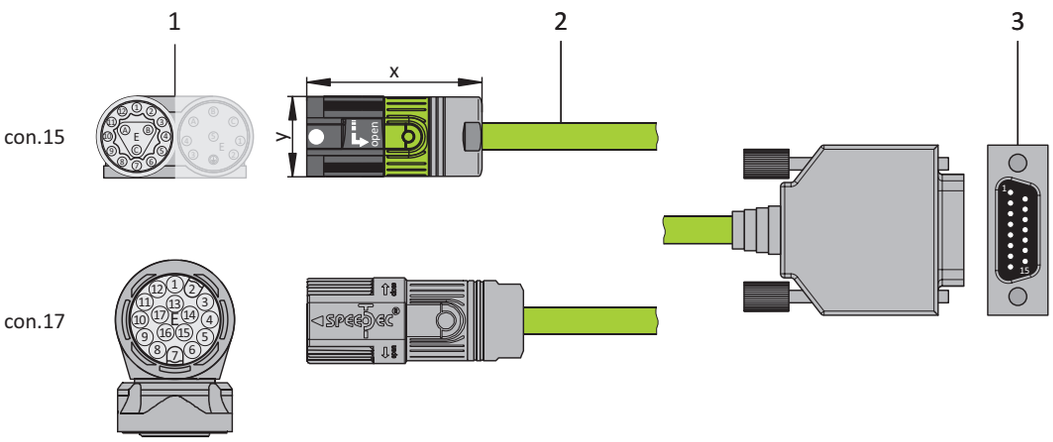

1: Plug connector

2: STOBER encoder cable

3: D-sub X140

Information

For connecting STOBER EnDat 2.1 sin/cos cables with a 15-pin D-sub connector to an integrated motor temperature sensor, you must use the AP6A02 interface adapter (ID No. 56523), available separately, to lead out the temperature sensor cores.

Encoder cables – con.15 plug connectors

Motor (1)				Cable (2)	Drive controller (3)
Connection diagram	Pin	Designation	Core color	Core color	Pin X140
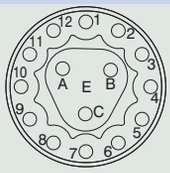	1	U_2 Sense	BU	GNRD	12
	2	0 V Sense	WH	GNBK	10
	3	U_2	BNGN	BNRD	4
	4	Clock +	VT	WHBK	8
	5	Clock –	YE	WHYE	15
	6	0 V GND	WHGN	BNBU	2
	7	B + (Sin +)	BUBK	RD	9
	8	B – (Sin –)	RDBK	OG	1
	9	Data +	GY	GY	5
	10	A + (Cos +)	GNBK	GN	11
	11	A – (Cos –)	YEBK	YE	3
	12	Data –	PK	BU	13
	A	1TP2	WH	BNGY	14
	B	1TP1	BK	BNYE	7
	C	—	—	—	—
	Housing	Shield	—	—	Housing

Tab. 20: con.15 encoder cable pin assignment, EnDat 2.1 sin/cos

Length x [mm]	Diameter y [mm]
42	18.7

Tab. 21: con.15 connector dimensions

Encoder cables – con.17 plug connectors

Motor (1)				Cable (2)	Drive controller (3)
Connection diagram	Pin	Designation	Core color	Core color	Pin X140
	1	U_2 Sense	BU	GNRD	12
	2	—	—	—	—
	3	—	—	—	—
	4	0 V Sense	WH	GNBK	10
	5	1TP2	WH	BNGY	14
	6	1TP1	BK	BNYE	7
	7	U_2	BNGN	BNRD	4
	8	Clock +	VT	WHBK	8
	9	Clock –	YE	WHYE	15
	10	0 V GND	WHGN	BNBU	2
	11	—	—	—	—
	12	B + (Sin +)	BUBK	RD	9
	13	B – (Sin –)	RDBK	OG	1
	14	Data +	GY	GY	5
	15	A + (Cos +)	GNBK	GN	11
	16	A – (Cos –)	YEBK	YE	3
	17	Data –	PK	BU	13
	Housing	Shield	—	—	Housing

Tab. 22: con.17 encoder cable pin assignment, EnDat 2.1 sin/cos

Length x [mm]	Diameter y [mm]
56	22

Tab. 23: con.17 connector dimensions

6.4.3 Resolver

Suitable encoder cables are described below.

6.4.3.1 Connection description

Depending on the size of the motor plug connector, encoder cables are available in the following designs:

- Quick lock for con.15
- speedtec quick lock for con.17

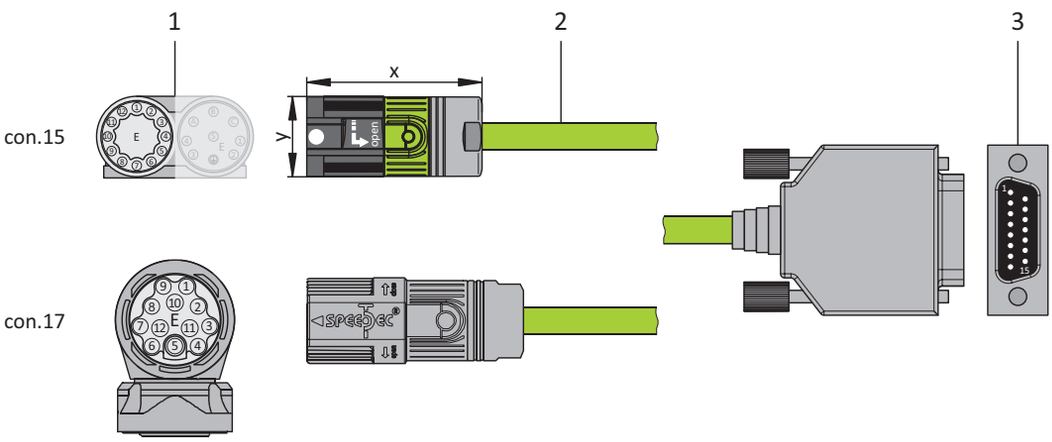

1: Plug connector

2: STOBER encoder cable

3: D-sub X4/X140

Encoder cables – con.15 plug connectors

Motor (1)				Cable (2)	Drive controller (3)
Connection diagram	Pin	Designation	Core color	Core color	Pin X4/X140
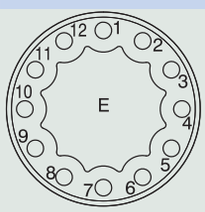	1	S3 Cos +	BK	YE	3
	2	S1 Cos –	RD	GN	11
	3	S4 Sin +	BU	WH	1
	4	S2 Sin –	YE	BN	9
	5	1TP1	BK	RD	7
	6	1TP2	WH	BU	14
	7	R2 Ref +	YEWH/ BKWH	GY	6
	8	R1 Ref –	RDWH	PK	2
	9	—	—	—	—
	10	—	—	—	—
	11	—	—	—	—
	12	—	—	—	—
	Housing	Shield	—	—	Housing

Tab. 24: con.15 encoder cable pin assignment, resolver

Length x [mm]	Diameter y [mm]
42	18.7

Tab. 25: con.15 connector dimensions

Encoder cables – con.17 plug connectors

Motor (1)				Cable (2)	Drive controller (3)
Connection diagram	**Pin**	**Designation**	**Core color**	**Core color**	**Pin X4/X140**
	1	S3 Cos +	BK	YE	3
	2	S1 Cos –	RD	GN	11
	3	S4 Sin +	BU	WH	1
	4	S2 Sin –	YE	BN	9
	5	1TP1	BK	RD	7
	6	1TP2	WH	BU	14
	7	R2 Ref +	YEWH/ BKWH	GY	6
	8	R1 Ref –	RDWH	PK	2
	9	—	—	—	—
	10	—	—	—	—
	11	—	—	—	—
	12	—	—	—	—
	Housing	Shield	—	—	Housing

Tab. 26: con.17 encoder cable pin assignment, resolver

Length x [mm]	Diameter y [mm]
56	22

Tab. 27: con.17 connector dimensions

6.5 One Cable Solution EnDat 3

STOBER synchronous servo motors are equipped with plug connectors as standard.

STOBER provides suitable cables in various lengths, conductor cross-sections and connector sizes.

The cables are available ready-made in the lengths 2.5 m, 5.0 m, 7.5 m, 10.0 m, 12.5 m, 15.0 m, 18.0 m, 20.0 m, 25.0 m, 30.0 m.
Other lengths on request.

A motor connection as a One Cable Solution (OCS) combined with an EnDat 3 encoder requires hybrid cables which feature encoder communication and power transmission in a shared cable.

Information

For connecting as a One Cable Solution, use exclusively hybrid cables from STOBER. The use of unsuitable cables or poorly made connections can cause subsequent damage. For this reason, we reserve the right to reject claims under the warranty in this case.

6.5.1 Motor assignment

STOBER offers cables with a minimum cross-section for the motors as standard. Depending on the application, however, larger conductor cross-sections may be required. For this reason, take into account the following points in addition for dimensioning the cable:

- Stall current I_0 of the motor
- Permitted current carrying capacity of the conductors
- Cable length
- Terminal specifications of the drive controller or output choke
- Connector size of the motor

EZ motors – IC 410 convection cooling

	n_N 3000 rpm			n_N 4500 rpm			n_N 6000 rpm		
	K_{EM} V/1000 rpm	Plug con. size	Minimum cross-section mm²	K_{EM} V/1000 rpm	Plug con. size	Minimum cross-section mm²	K_{EM} V/1000 rpm	Plug con. size	Minimum cross-section mm²
EZ301U	40	con.23	1.5	—	—	—	40	con.23	1.5
EZ302U	86	con.23	1.5	—	—	—	42	con.23	1.5
EZ303U	109	con.23	1.5	—	—	—	55	con.23	1.5
EZ401U	96	con.23	1.5	—	—	—	47	con.23	1.5
EZ402U	94	con.23	1.5	—	—	—	60	con.23	1.5
EZ404U	116	con.23	1.5	—	—	—	78	con.23	1.5
EZ501U	97	con.23	1.5	—	—	—	68	con.23	1.5
EZ502U	121	con.23	1.5	—	—	—	72	con.23	1.5
EZ503U	119	con.23	1.5	—	—	—	84	con.23	1.5
EZ505U	141	con.23	1.5	103	con.23	1.5	—	—	—
EZ701U	95	con.23	1.5	—	—	—	76	con.23	1.5
EZ702U	133	con.23	1.5	—	—	—	82	con.23	2.5
EZ703U	122	con.23	1.5	99	con.23	2.5	—	—	—
EZ705U	140	con.23	2.5	—	—	—	—	—	—

Tab. 28: Plug connector size and minimum cross-section, EZ synchronous servo motors with convection cooling

EZ motors – IC 416 forced ventilation

	n_N 3000 rpm			n_N 4500 rpm			n_N 6000 rpm		
	K_{EM} V/1000 rpm	Plug con. size	Minimum cross-section mm²	K_{EM} V/1000 rpm	Plug con. size	Minimum cross-section mm²	K_{EM} V/1000 rpm	Plug con. size	Minimum cross-section mm²
EZ401B	96	con.23	1.5	—	—	—	47	con.23	1.5
EZ402B	94	con.23	1.5	—	—	—	60	con.23	1.5
EZ404B	116	con.23	1.5	—	—	—	78	con.23	1.5
EZ501B	97	con.23	1.5	—	—	—	68	con.23	1.5
EZ502B	121	con.23	1.5	—	—	—	72	con.23	1.5
EZ503B	119	con.23	1.5	—	—	—	84	con.23	2.5
EZ505B	141	con.23	1.5	103	con.23	1.5	—	—	—
EZ701B	95	con.23	1.5	—	—	—	76	con.23	1.5
EZ702B	133	con.23	1.5	—	—	—	—	—	—
EZ703B	122	con.23	2.5	99	—	—	—	—	—

Tab. 29: Plug connector size and minimum cross-section, EZ synchronous servo motors with forced ventilation

Assignment of EZS motors – IC 410 convection cooling

	n_N 3000 rpm		
	K_{EM} V/1000 rpm	Plug con. size	Minimum cross-section mm²
EZS501U	97	con.23	1.5
EZS502U	121	con.23	1.5
EZS503U	119	con.23	1.5
EZS701U	95	con.23	1.5
EZS702U	133	con.23	1.5
EZS703U	122	con.23	1.5

Tab. 30: Plug connector size and minimum cross-section, EZS synchronous servo motors with convection cooling

Assignment of EZS motors – IC 416 forced ventilation

	n_N 3000 rpm		
	K_{EM} V/1000 rpm	Plug con. size	Minimum cross-section mm²
EZS501B	97	con.23	1.5
EZS502B	121	con.23	1.5
EZS503B	119	con.23	1.5
EZS701B	95	con.23	1.5
EZS702B	133	con.23	1.5
EZS703B	122	con.23	2.5

Tab. 31: Plug connector size and minimum cross-section, EZS synchronous servo motors with forced ventilation

6.5.2 Connection description

The hybrid cables are available in plug connector size con.23 with a speedtec quick lock.

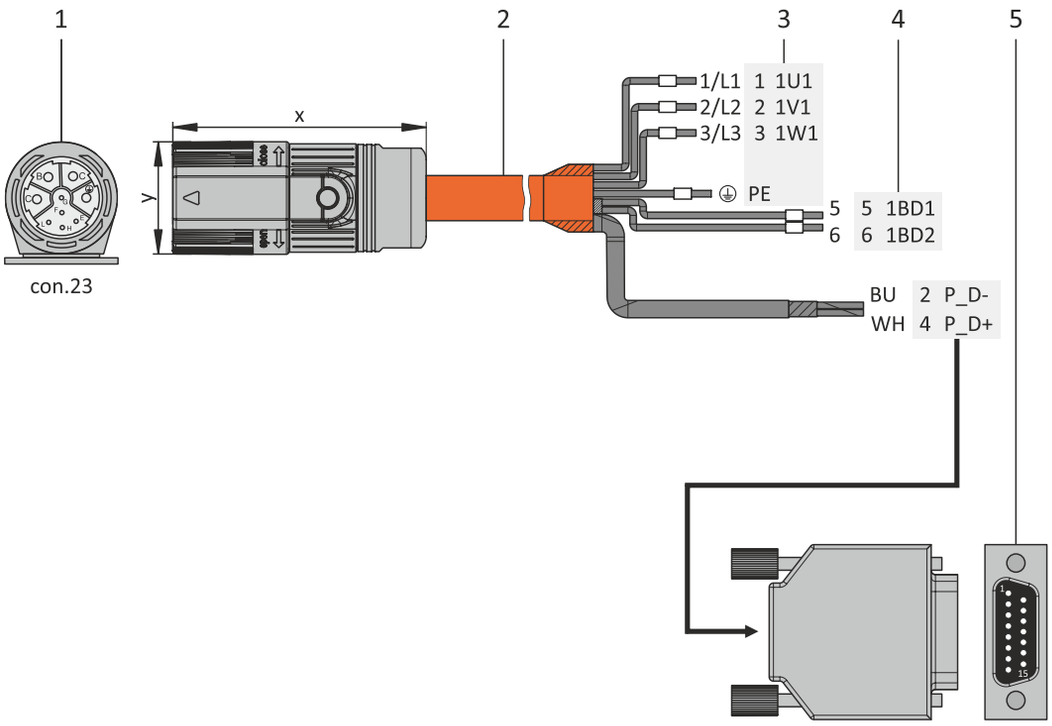

1: Plug connectors

2: STOBER hybrid cable

3: Connection to terminal X20, motor

4: Connection of terminal X2, brake

5: D-sub X4

Hybrid cables – con.23 plug connectors

Motor (1)				Cable (2)	Drive controller (3) – (5)		
Connection diagram	**Pin**	**Designation**	**Core color**	**Core No./ Core color**	**Pin X20**	**Pin X2**	**Pin X4**
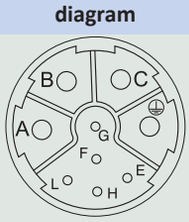	A	1U1	BK	1/L1	1	—	—
	B	1V1	BU	2/L2	2	—	—
	C	1W1	RD	3/L3	3	—	—
	E	P_D–	YE	BU	—	—	2
	F	P_D shield	—	—	—	—	Housing
	G	1BD1	RD	5	—	5	—
	H	P_D+	VT	WH	—	—	4
	L	1BD2	BK	6	—	6	—
	⏚	PE	GNYE	GNYE	4	—	
	Housing	Shield	—	—	Shield contact	—	—

Tab. 32: con.23 hybrid cable pin assignment

Length x [mm]	Diameter y [mm]
78	26

Tab. 33: con.23 connector dimensions

6.6 Additional documentation

Additional documentation related to the product can be found at
http://www.stoeber.de/en/downloads/

Enter the ID of the documentation in the Search... field.

Documentation	ID
Connection method manual	443102

7 EZ synchronous servo motors

Table of contents

7.1 Overview ... 178

7.2 Selection tables ... 179

7.2.1 EZ motors with convection cooling ... 180

7.2.2 EZ motors with forced ventilation ... 181

7.3 Torque/speed curves ... 182

7.4 Dimensional drawings ... 191

7.4.1 EZ3 motors (One Cable Solution) ... 191

7.4.2 EZ3 motors ... 192

7.4.3 EZ4 – EZ7 motors with convection cooling (One Cable Solution) ... 193

7.4.4 EZ4 – EZ8 motors with convection cooling ... 194

7.4.5 EZ4 – EZ7 motors with forced ventilation (One Cable Solution) ... 195

7.4.6 EZ4 – EZ8 motors with forced ventilation ... 196

7.5 Type designation ... 197

7.6 Product description ... 197

7.6.1 General features ... 197

7.6.2 Electrical features ... 198

7.6.3 Ambient conditions ... 198

7.6.4 Encoders ... 198

7.6.5 Temperature sensor ... 201

7.6.6 Cooling ... 202

7.6.7 Holding brake ... 203

7.6.8 Connection method ... 205

7.7 Project configuration ... 212

7.7.1 Calculation of the operating point ... 212

7.7.2 Permitted shaft loads ... 213

7.7.3 Derating ... 214

7.8 Further information ... 215

7.8.1 Directives and standards ... 215

7.8.2 Identifiers and test symbols ... 215

7.8.3 Additional documentation ... 215

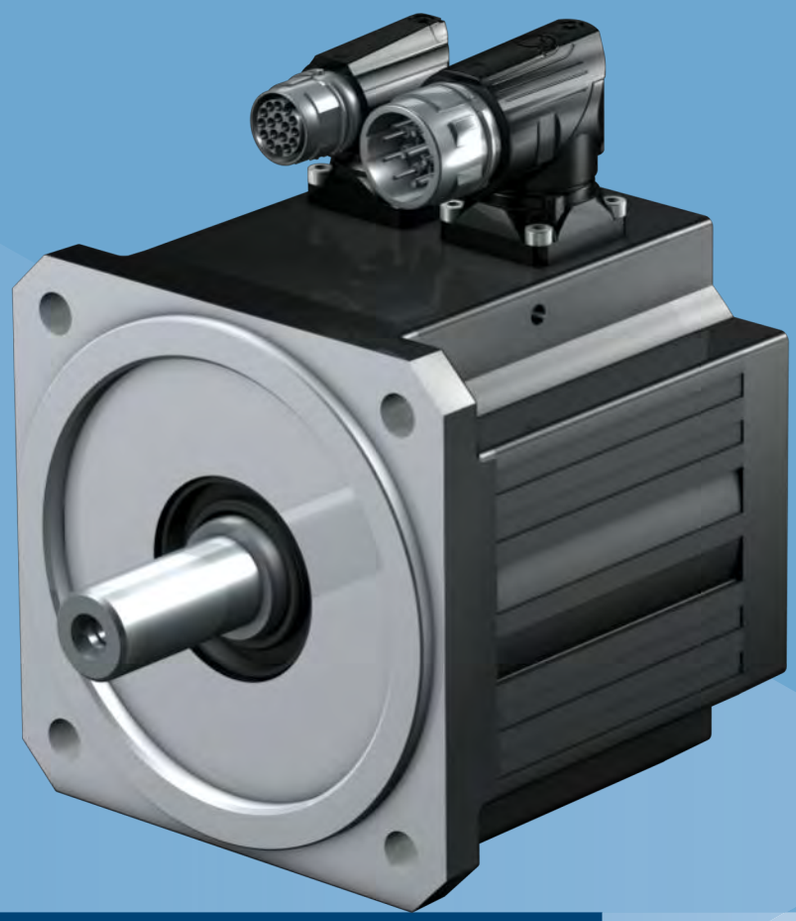

7 Synchronous servo motors EZ

7.1 Overview

Synchronous servo motors with single tooth winding

Features

High dynamics	✓
Short length	✓
Super compact due to tooth-coil winding method with the highest possible copper fill factor	✓
Backlash-free holding brake (optional)	✓
Electronic nameplate for fast and reliable commissioning	✓
Convection cooling or forced ventilation (optional)	✓
Optical, inductive EnDat absolute encoders or resolvers	✓
Elimination of referencing with multi-turn absolute encoders (optional)	✓
One Cable Solution (OCS) with EnDat 3 encoder (optional)	✓
Rotating plug connectors with quick lock	✓

Torques

M_N	0.89 – 77.2 Nm
M_0	0.95 – 94 Nm

7.2 Selection tables

The technical data specified in the selection tables applies to:

- Installation altitudes up to 1000 m above sea level
- Surrounding temperatures from −15 °C to +40 °C
- Operation on a STOBER drive controller
- DC link voltage U_{ZK} = DC 540 V
- Coating: RAL 9005 Jet black, matte

In addition, the technical data applies to an uninsulated design with the following thermal mounting conditions:

Type	Dimensions of steel mounting flange (thickness x width x height)	Convection surface area Steel mounting flange
EZ3 – EZ5	23 x 210 x 275 mm	0.16 m^2
EZ7 – EZ8	28 x 300 x 400 mm	0.3 m^2

Note the differing ambient conditions in Chapter Derating

Formula symbols

An explanation of the formula symbols can be found in Chapter Symbols in formulas.

Observe the additional information on the following formula symbols:

- I_0 = RMS value of the line-to-line current when stall torque M_0 is generated (tolerance ±5%).
- I_{max} = RMS value of the short-term maximum permitted line-to-line current when maximum torque M_{max} is generated (tolerance ±5%). Exceeding I_{max} may lead to irreversible damage (demagnetization) of the rotor.
- I_N = RMS value of the line-to-line current when nominal torque M_N is generated at the nominal point (tolerance ±5%).
- M_0 = Torque that a motor is continuously able to deliver at a speed of 10 rpm (tolerance ±5%). At a speed of 0 rpm, a minor continuous torque has to be taken into account. Contact your STOBER customer advisor for such an application.

7.2.1 EZ motors with convection cooling

Type	K_{EM} [V/1000 rpm]	n_N [rpm]	M_N [Nm]	I_N [A]	$K_{M,N}$ [Nm/A]	P_N [kW]	M_0 [Nm]	I_0 [A]	K_{M0} [Nm/A]	M_R [Nm]	M_{max} [Nm]	I_{max} [A]	R_{U-V} [Ω]	L_{U-V} [mH]	T_{el} [ms]	J_{dyn} [kgcm²]	m_{dyn} [kg]
EZ301U	40	6000	0.89	1.93	0.46	0.56	0.95	2.02	0.49	0.04	2.80	12.7	11.70	39.80	3.40	0.19	1.50
EZ301U	40	3000	0.93	1.99	0.47	0.29	0.95	2.02	0.49	0.04	2.80	12.7	11.70	39.80	3.40	0.19	1.50
EZ302U	42	6000	1.50	3.18	0.47	0.94	1.68	3.48	0.49	0.04	5.00	17.8	4.50	18.70	4.16	0.29	2.10
EZ302U	86	3000	1.59	1.60	0.99	0.50	1.68	1.67	1.03	0.04	5.00	8.55	17.80	75.00	4.21	0.29	2.10
EZ303U	55	6000	1.96	3.17	0.62	1.2	2.25	3.55	0.65	0.04	7.00	16.9	4.90	21.10	4.31	0.40	2.60
EZ303U	109	3000	2.07	1.63	1.27	0.65	2.19	1.71	1.30	0.04	7.00	8.25	20.30	68.70	5.24	0.40	2.60
EZ401U	47	6000	2.30	4.56	0.50	1.4	2.80	5.36	0.53	0.04	8.50	33.0	1.94	11.52	5.94	0.93	4.00
EZ401U	96	3000	2.80	2.74	1.02	0.88	3.00	2.88	1.06	0.04	8.50	16.5	6.70	37.70	5.63	0.93	4.00
EZ402U	60	6000	3.50	5.65	0.62	2.2	4.90	7.43	0.66	0.04	16.0	43.5	1.20	8.88	7.40	1.63	5.10
EZ402U	94	3000	4.70	4.40	1.07	1.5	5.20	4.80	1.09	0.04	16.0	26.5	3.00	21.80	7.26	1.63	5.10
EZ404U	78	6000	5.80	7.18	0.81	3.6	8.40	9.78	0.86	0.04	29.0	51.0	0.89	7.07	7.94	2.98	7.20
EZ404U	116	3000	6.90	5.80	1.19	2.2	8.60	6.60	1.31	0.04	29.0	35.0	1.85	15.00	8.11	2.98	7.20
EZ501U	68	6000	3.40	4.77	0.71	2.1	4.40	5.80	0.77	0.06	16.0	31.0	2.10	12.10	5.76	2.90	5.00
EZ501U	97	3000	4.30	3.74	1.15	1.4	4.70	4.00	1.19	0.06	16.0	22.0	3.80	23.50	6.18	2.90	5.00
EZ502U	72	6000	5.20	7.35	0.71	3.3	7.80	9.80	0.80	0.06	31.0	59.0	0.76	5.60	7.37	5.20	6.50
EZ502U	121	3000	7.40	5.46	1.36	2.3	8.00	5.76	1.40	0.06	31.0	33.0	2.32	16.80	7.24	5.20	6.50
EZ503U	84	6000	6.20	7.64	0.81	3.9	10.6	11.6	0.92	0.06	43.0	63.5	0.62	5.00	8.06	7.58	8.00
EZ503U	119	3000	9.70	6.90	1.41	3.1	11.1	7.67	1.46	0.06	43.0	41.0	1.25	10.00	8.00	7.58	8.00
EZ505U	103	4500	9.50	8.94	1.06	4.5	15.3	13.4	1.15	0.06	67.0	73.0	0.50	4.47	8.94	12.2	10.9
EZ505U	141	3000	13.5	8.80	1.53	4.2	16.0	10.0	1.61	0.06	67.0	52.0	0.93	8.33	8.96	12.2	10.9
EZ701U	76	6000	5.20	6.68	0.78	3.3	7.90	9.38	0.87	0.24	20.0	31.0	0.87	8.13	9.34	8.50	8.30
EZ701U	95	3000	7.40	7.20	1.03	2.3	8.30	8.00	1.07	0.24	20.0	25.0	1.30	12.83	9.87	8.50	8.30
EZ702U	82	6000	7.20	8.96	0.80	4.5	14.3	16.5	0.88	0.24	41.0	60.5	0.34	3.90	11.47	13.7	10.8
EZ702U	133	3000	12.0	8.20	1.46	3.8	14.4	9.60	1.53	0.24	41.0	36.0	1.00	11.73	11.73	13.7	10.8
EZ703U	99	4500	12.1	11.5	1.05	5.7	20.0	17.8	1.14	0.24	65.0	78.0	0.36	4.42	12.28	21.6	12.8
EZ703U	122	3000	16.5	11.4	1.45	5.2	20.8	14.0	1.50	0.24	65.0	62.0	0.52	6.80	13.08	21.6	12.8
EZ705U	106	4500	16.4	14.8	1.11	7.7	30.0	25.2	1.20	0.24	104	114	0.22	2.76	12.55	34.0	18.3
EZ705U	140	3000	21.3	14.2	1.50	6.7	30.2	19.5	1.56	0.24	104	87.0	0.33	4.80	14.55	34.0	18.3
EZ802U	90	4500	10.5	11.2	0.94	5.0	34.5	33.3	1.05	0.30	100	135	0.13	1.90	14.60	58.0	26.6
EZ802U	136	3000	22.3	13.9	1.60	7.0	37.1	22.3	1.68	0.30	100	84.0	0.30	5.00	16.66	58.0	26.6
EZ803U	131	3000	26.6	17.7	1.50	8.4	48.2	31.1	1.56	0.30	145	124	0.18	2.79	15.50	83.5	32.7
EZ805U	142	2000	43.7	25.9	1.69	9.2	66.1	37.9	1.75	0.30	205	155	0.13	2.22	17.08	133	45.8

7.2.2 EZ motors with forced ventilation

Type	K_{EM} [V/1000 rpm]	n_N [rpm]	M_N [Nm]	I_N [A]	$K_{M,N}$ [Nm/A]	P_N [kW]	M_0 [Nm]	I_0 [A]	K_{M0} [Nm/A]	M_R [Nm]	M_{max} [Nm]	I_{max} [A]	R_{U-V} [Ω]	L_{U-V} [mH]	T_{el} [ms]	J_{dyn} [kgcm²]	m_{dyn} [kg]
EZ401B	47	6000	2.90	5.62	0.52	1.8	3.50	6.83	0.52	0.04	8.50	33.0	1.94	11.52	5.94	0.93	5.40
EZ401B	96	3000	3.40	3.40	1.00	1.1	3.70	3.60	1.04	0.04	8.50	16.5	6.70	37.70	5.63	0.93	5.40
EZ402B	60	6000	5.10	7.88	0.65	3.2	6.40	9.34	0.69	0.04	16.0	43.5	1.20	8.88	7.40	1.63	6.50
EZ402B	94	3000	5.90	5.50	1.07	1.9	6.30	5.80	1.09	0.04	16.0	26.5	3.00	21.80	7.26	1.63	6.50
EZ404B	78	6000	8.00	9.98	0.80	5.0	10.5	12.0	0.88	0.04	29.0	51.0	0.89	7.07	7.94	2.98	8.60
EZ404B	116	3000	10.2	8.20	1.24	3.2	11.2	8.70	1.29	0.04	29.0	35.0	1.85	15.00	8.11	2.98	8.60
EZ501B	68	6000	4.50	6.70	0.67	2.8	5.70	7.50	0.77	0.06	16.0	31.0	2.10	12.10	5.76	2.90	7.00
EZ501B	97	3000	5.40	4.70	1.15	1.7	5.80	5.00	1.17	0.06	16.0	22.0	3.80	23.50	6.18	2.90	7.00
EZ502B	72	6000	8.20	11.4	0.72	5.2	10.5	13.4	0.79	0.06	31.0	59.0	0.76	5.60	7.37	5.20	8.50
EZ502B	121	3000	10.3	7.80	1.32	3.2	11.2	8.16	1.38	0.06	31.0	33.0	2.32	16.80	7.24	5.20	8.50
EZ503B	84	6000	10.4	13.5	0.77	6.5	14.8	15.9	1.07	0.06	43.0	63.5	0.62	5.00	8.06	7.58	10.0
EZ503B	119	3000	14.4	10.9	1.32	4.5	15.9	11.8	1.35	0.06	43.0	41.0	1.25	10.00	8.00	7.58	10.0
EZ505B	103	4500	16.4	16.4	1.00	7.7	22.0	19.4	1.14	0.06	67.0	73.0	0.50	4.47	8.94	12.2	12.9
EZ505B	141	3000	20.2	13.7	1.47	6.4	23.4	14.7	1.60	0.06	67.0	52.0	0.93	8.33	8.96	12.2	12.9
EZ701B	76	6000	7.50	10.6	0.71	4.7	10.2	12.4	0.84	0.24	20.0	31.0	0.87	8.13	9.34	8.50	11.2
EZ701B	95	3000	9.70	9.50	1.02	3.1	10.5	10.0	1.07	0.24	20.0	25.0	1.30	12.83	9.87	8.50	11.2
EZ702B	82	6000	12.5	16.7	0.75	7.9	19.3	22.1	0.89	0.24	41.0	60.5	0.34	3.90	11.47	13.7	13.7
EZ702B	133	3000	16.6	11.8	1.41	5.2	19.3	12.9	1.51	0.24	41.0	36.0	1.00	11.73	11.73	13.7	13.7
EZ703B	99	4500	19.8	20.3	0.98	9.3	27.2	24.2	1.13	0.24	65.0	78.0	0.36	4.42	12.28	21.6	15.7
EZ703B	122	3000	24.0	18.2	1.32	7.5	28.0	20.0	1.41	0.24	65.0	62.0	0.52	6.80	13.08	21.6	15.7
EZ705B	106	4500	27.7	25.4	1.09	13	39.4	32.8	1.21	0.24	104	114	0.22	2.76	12.55	34.0	21.2
EZ705B	140	3000	33.8	22.9	1.48	11	41.8	26.5	1.59	0.24	104	87.0	0.33	4.80	14.55	34.0	21.2
EZ802B	90	4500	30.6	30.5	1.00	14	47.4	45.1	1.06	0.30	100	135	0.13	1.90	14.60	58.0	31.6
EZ802B	136	3000	34.3	26.5	1.29	11	47.9	28.9	1.67	0.30	100	84.0	0.30	5.00	16.66	58.0	31.6
EZ803B	131	3000	49.0	35.9	1.37	15	66.7	42.3	1.58	0.30	145	124	0.18	2.79	15.50	83.5	37.7
EZ805B	142	2000	77.2	45.2	1.71	16	94.0	53.9	1.75	0.30	205	155	0.13	2.22	17.08	133	51.8

7.3 Torque/speed curves

Torque/speed curves depend on the nominal speed and/or winding design of the motor and the DC link voltage of the drive controller that is used. The following torque/speed curves apply to the DC link voltage DC 540 V.

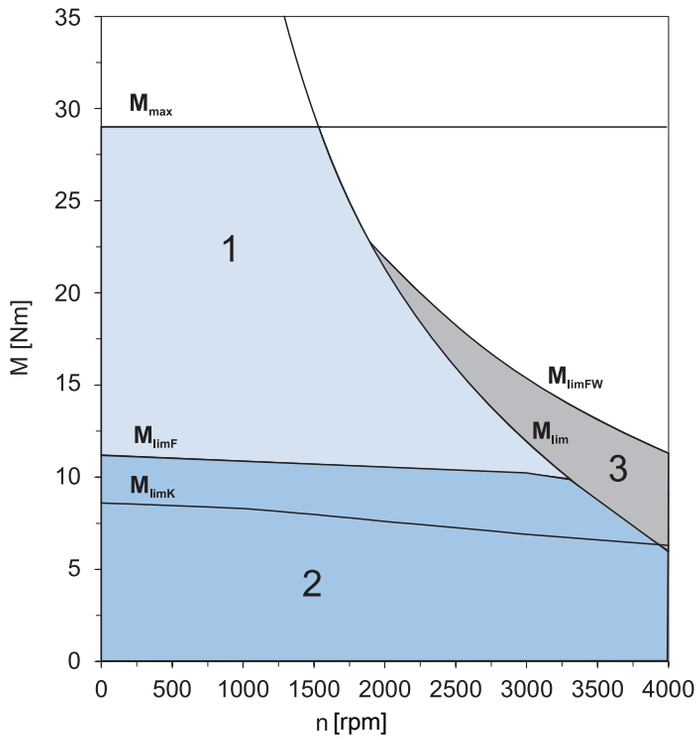

Fig. 1: Explanation of a torque/speed curve

1	Torque range for brief operation (ED_{10} < 100%) with Δϑ = 100 K	2	Torque range for continuous operation with constant load (S1 mode, ED_{10} = 100%) with Δϑ = 100 K
3	Field weakening range (can be used only with operation on STOBER drive controllers)		

EZ301 (n_N=3000 rpm)

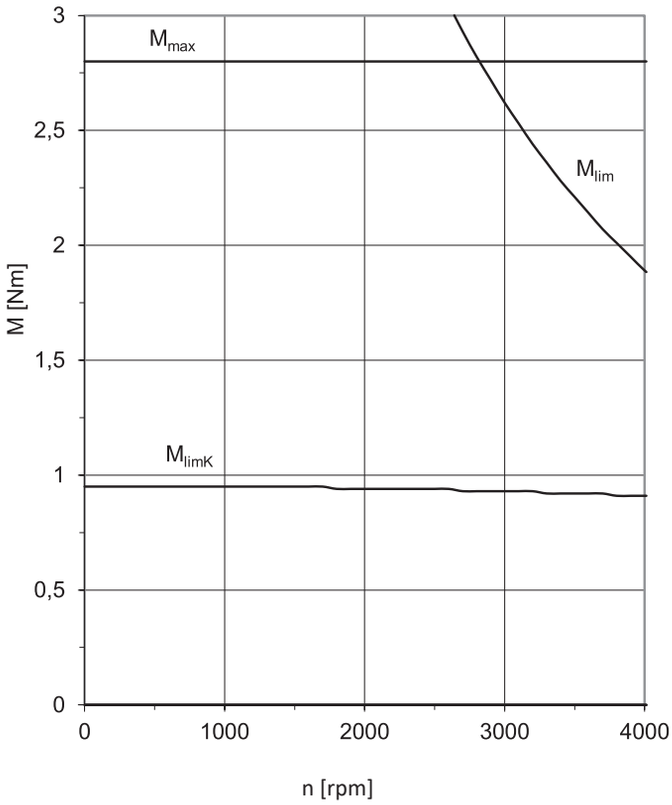

EZ301 (n_N=6000 rpm)

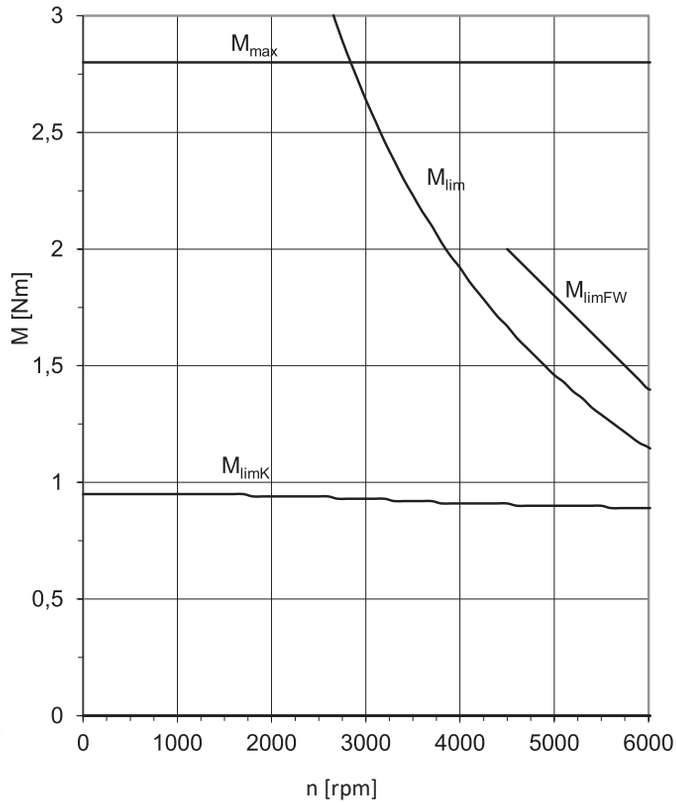

EZ302 (n_N=3000 rpm)

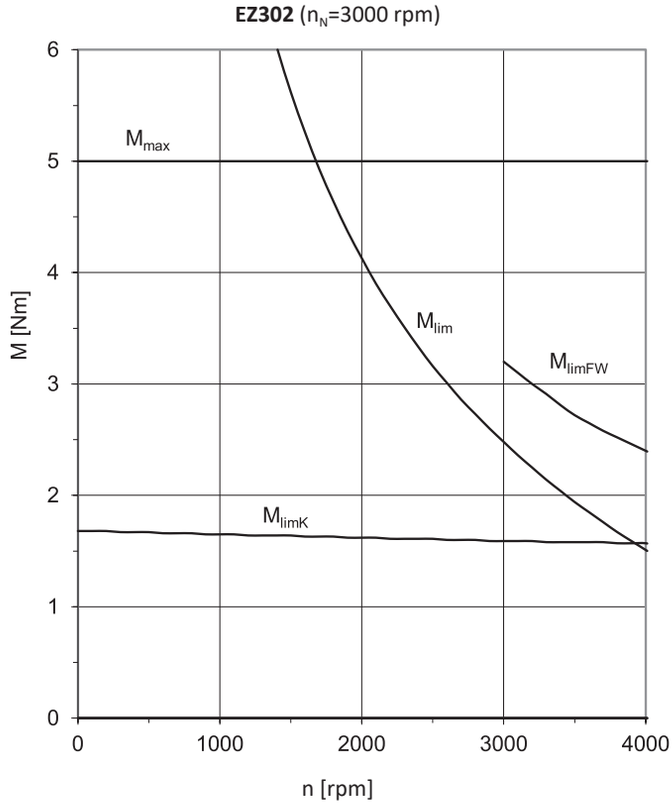

EZ302 (n_N=6000 rpm)

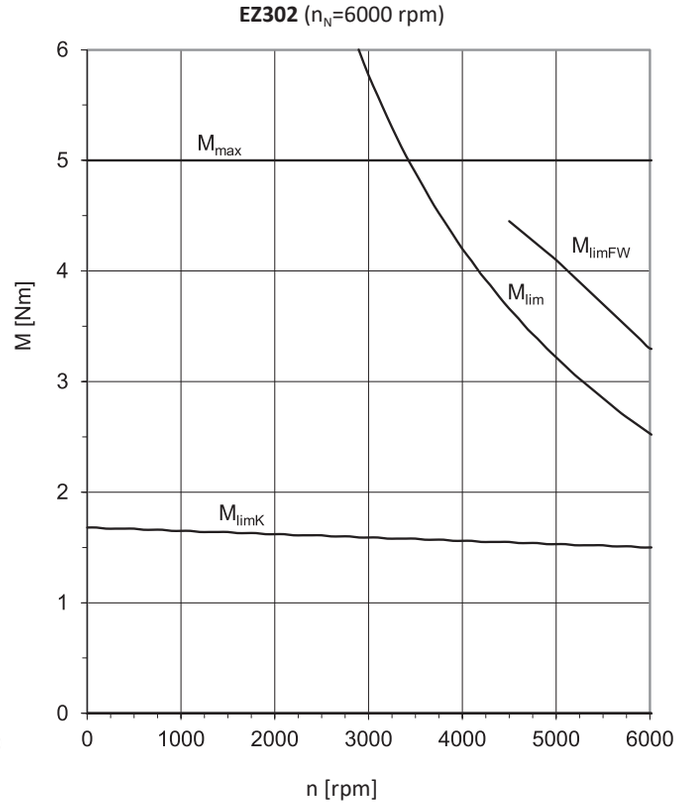

EZ303 (n_N=3000 rpm)

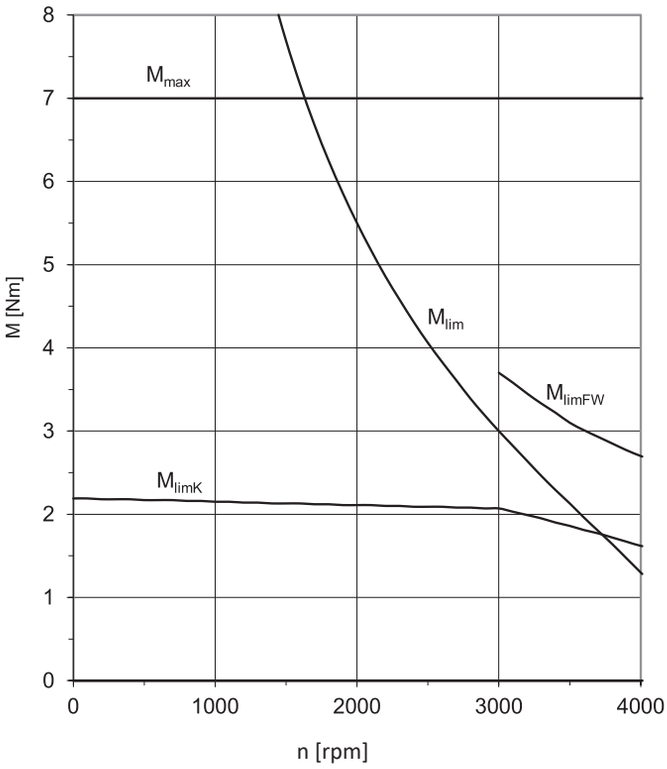

EZ303 (n_N=6000 rpm)

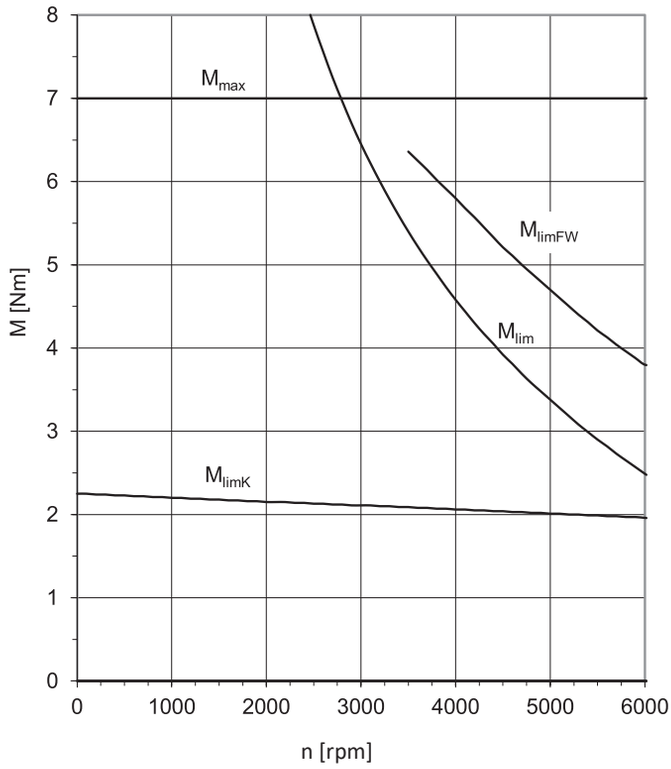

EZ401 (n_N=3000 rpm)

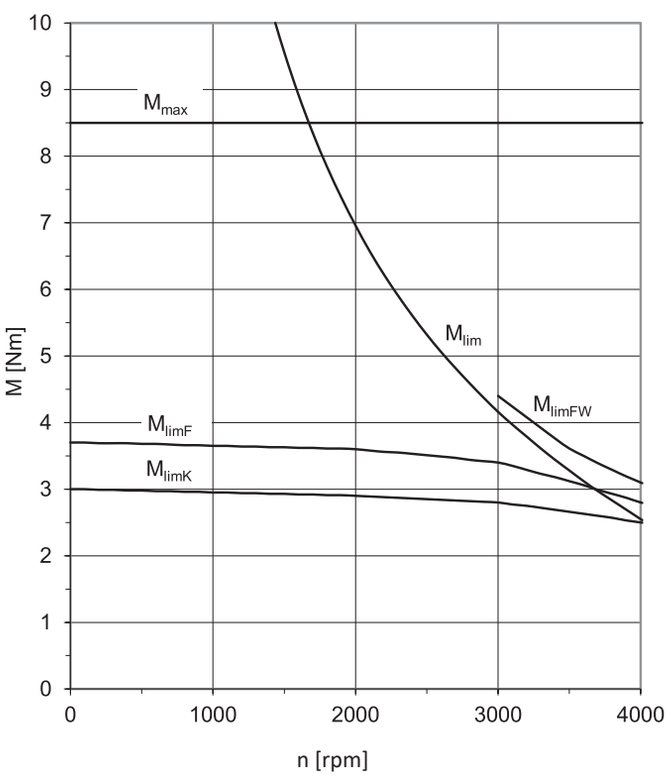

EZ401 (n_N=6000 rpm)

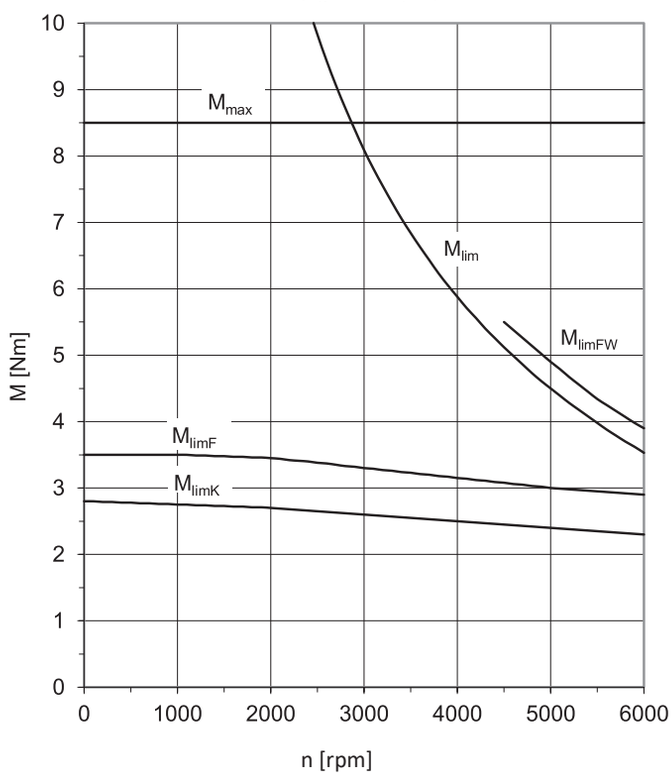

EZ402 (n_N=3000 rpm)

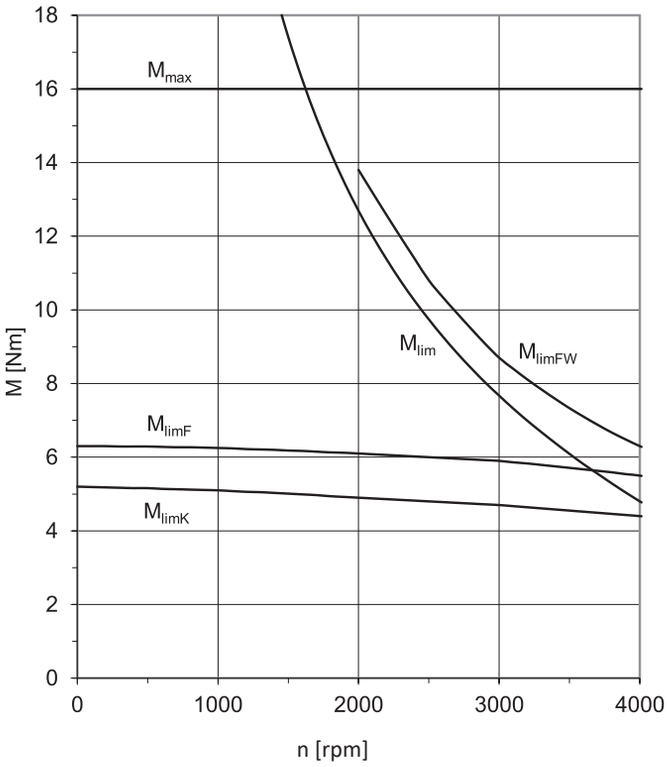

EZ402 (n_N=6000 rpm)

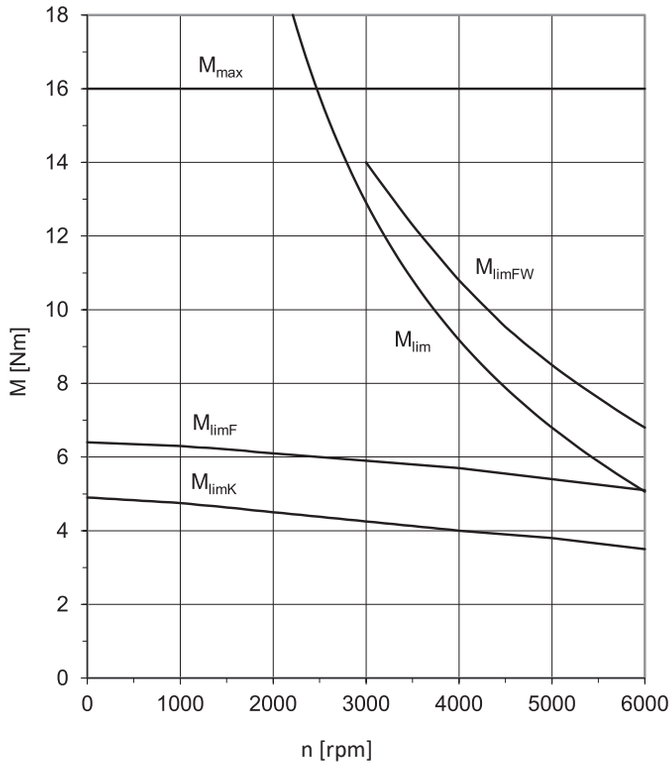

EZ404 (n_N=3000 rpm)

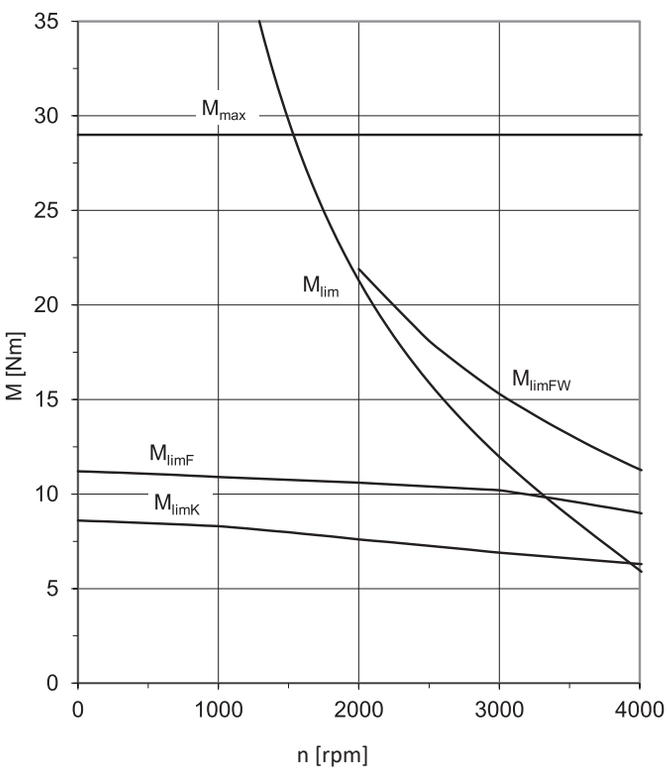

EZ404 (n_N=6000 rpm)

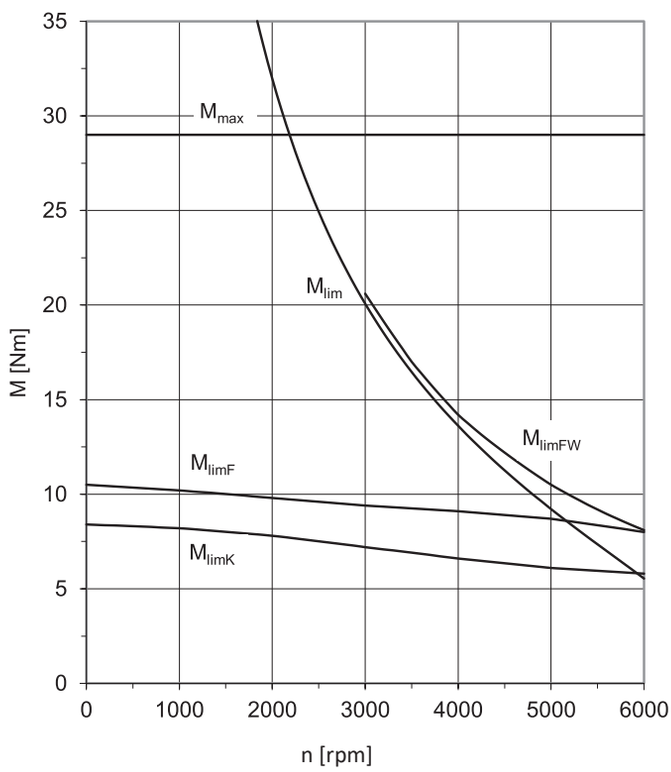

EZ501 (n_N=3000 rpm)

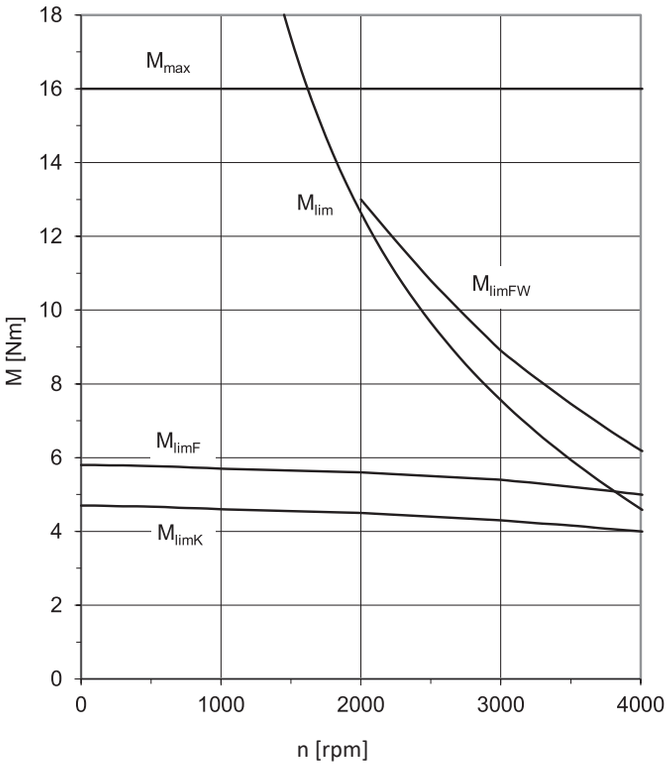

EZ501 (n_N=6000 rpm)

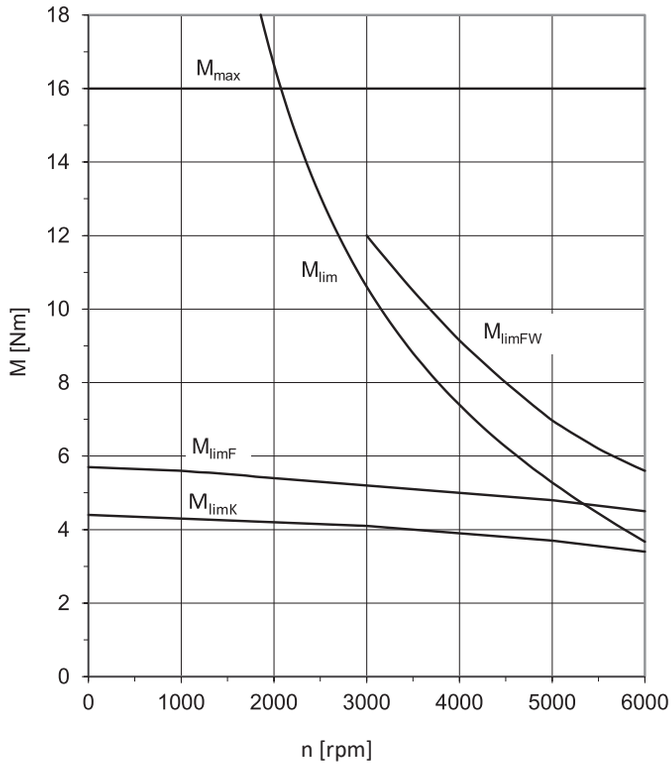

EZ502 (n_N=3000 rpm)

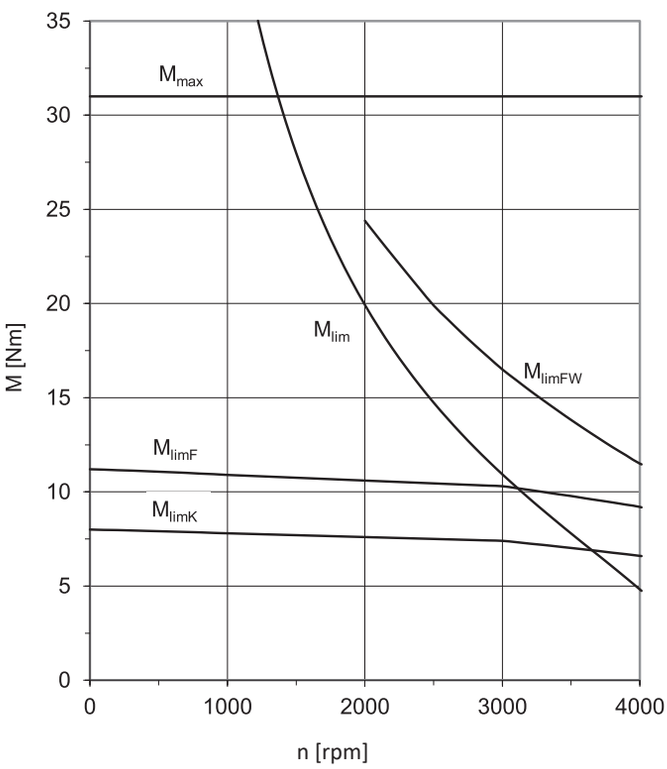

EZ502 (n_N=6000 rpm)

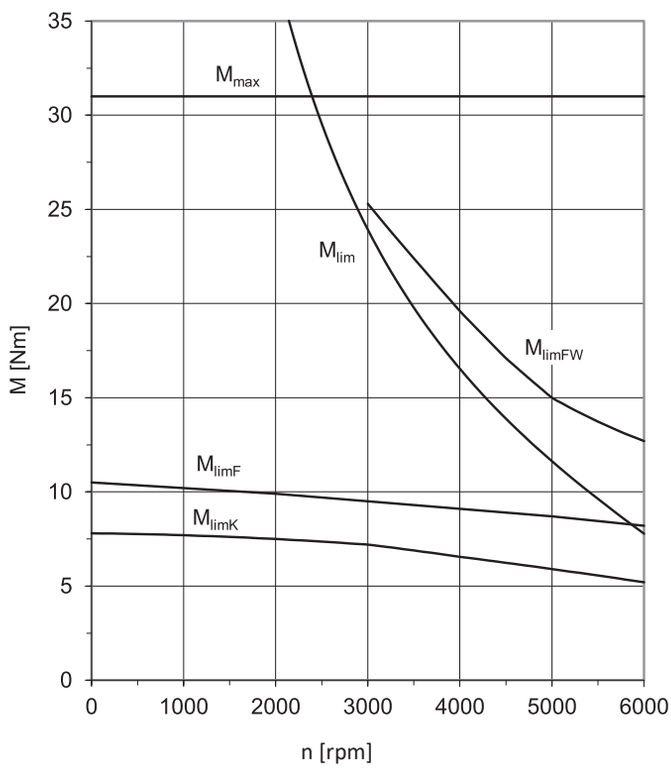

EZ503 (n_N=3000 rpm)

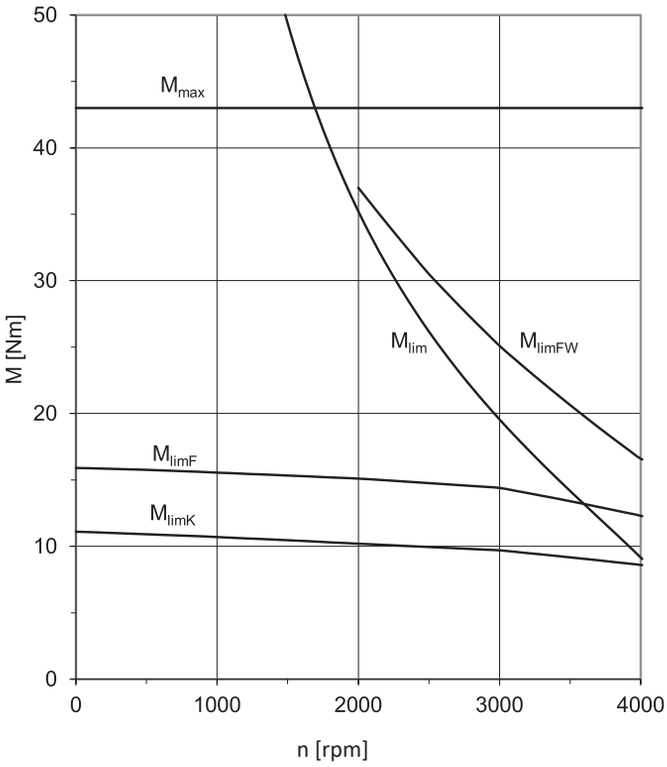

EZ503 (n_N=6000 rpm)

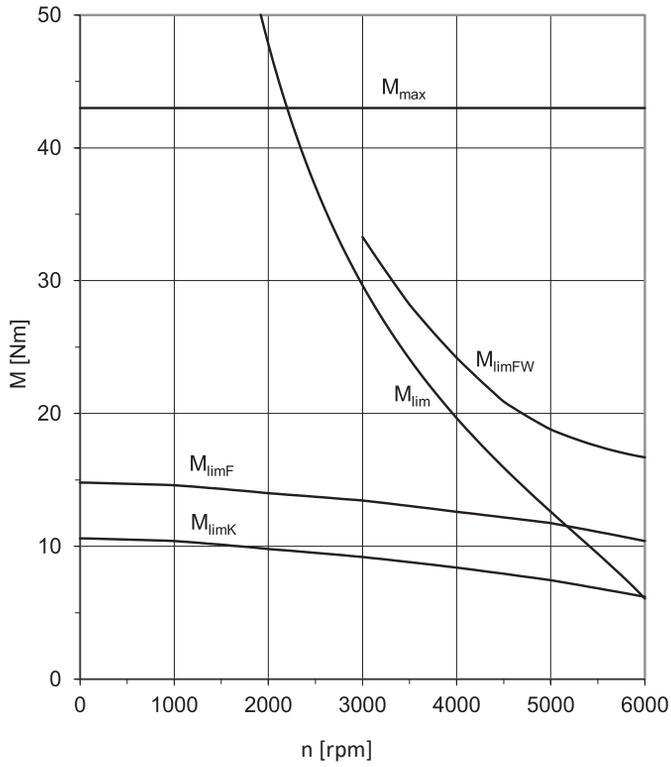

EZ505 (n_N=3000 rpm)

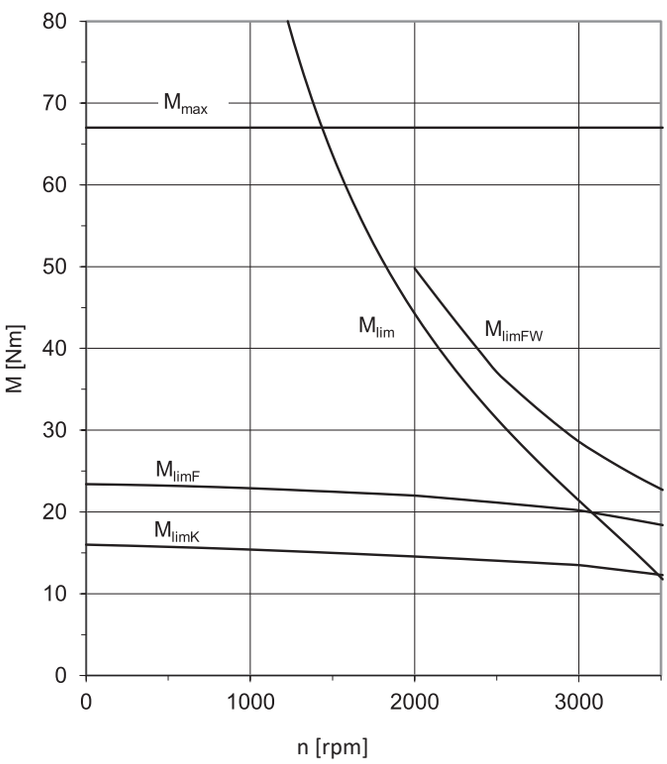

EZ505 (n_N=4500 rpm)

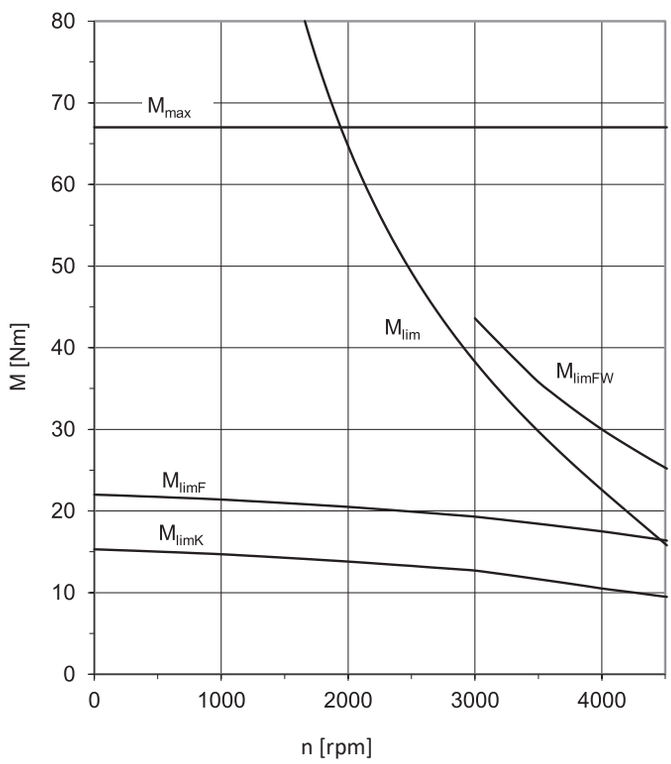

EZ701 (n_N=3000 rpm)

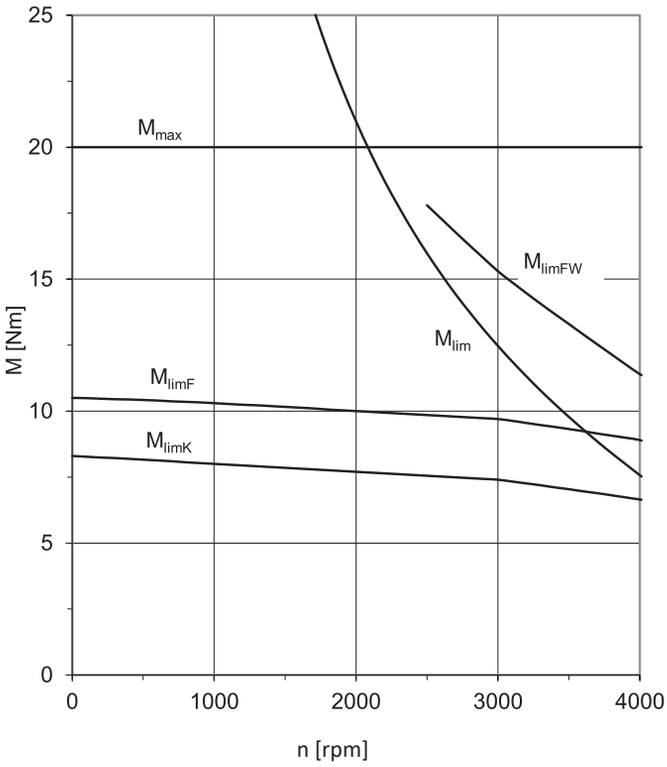

EZ701 (n_N=6000 rpm)

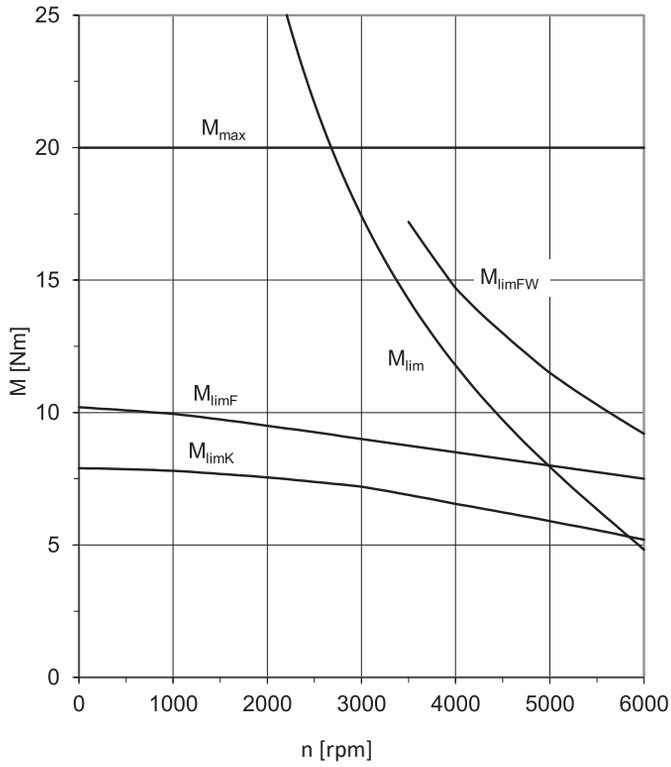

EZ702 (n_N=3000 rpm)

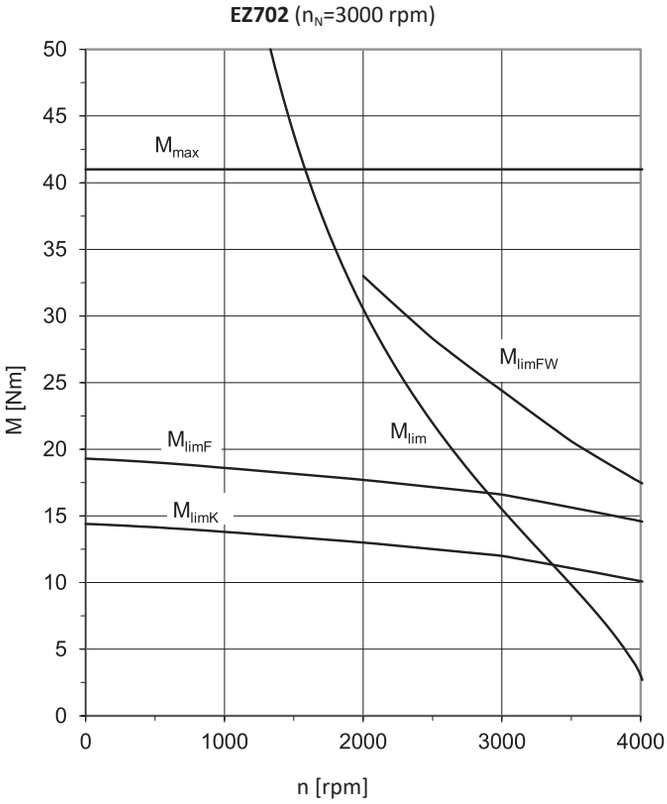

EZ702 (n_N=6000 rpm)

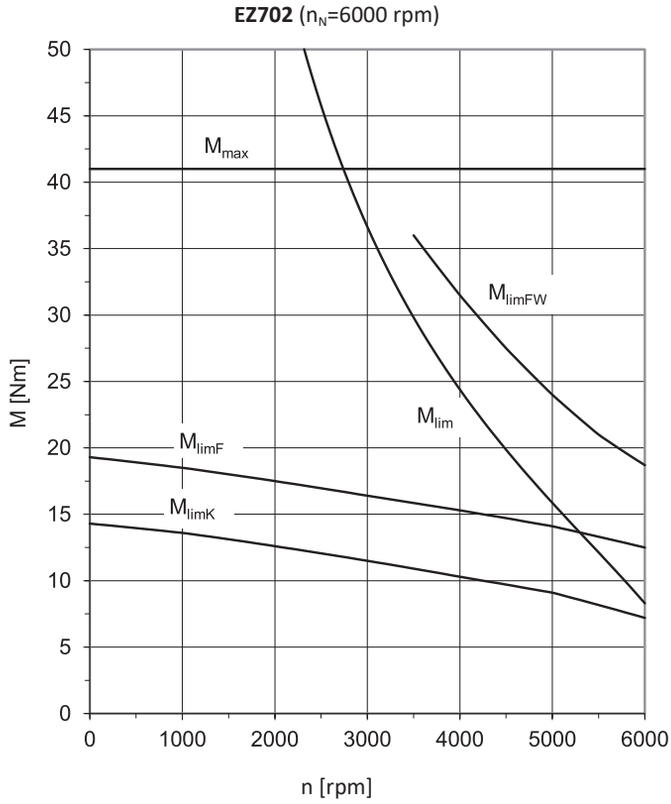

EZ703 (n_N=3000 rpm)

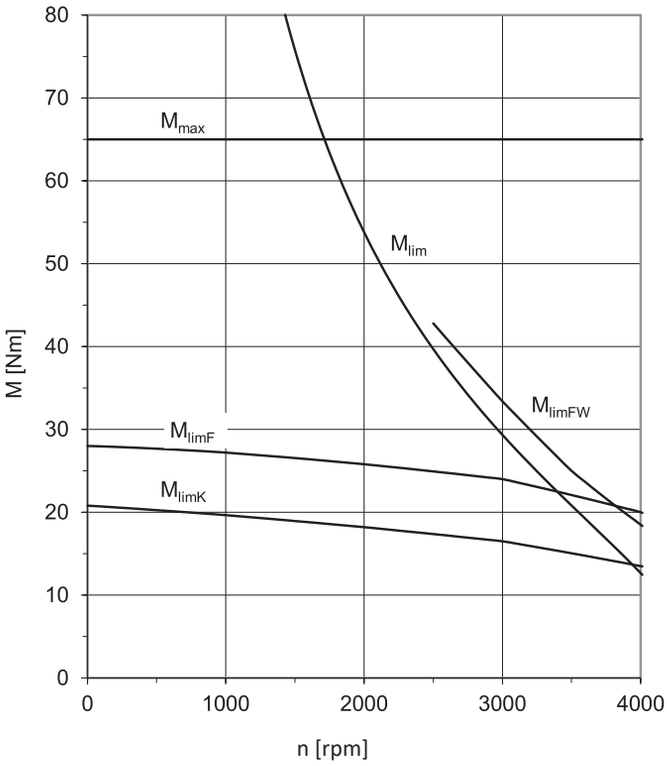

EZ703 (n_N=4500 rpm)

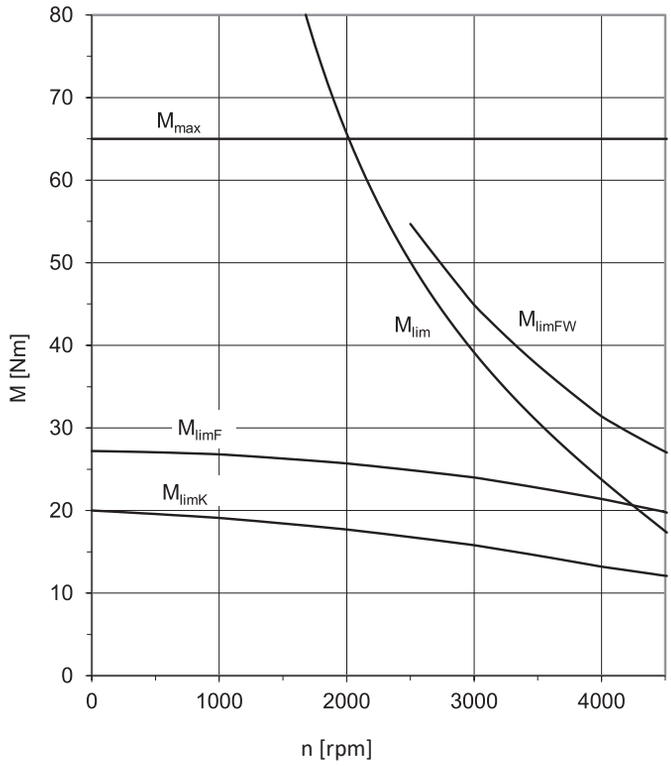

EZ705 (n_N=3000 rpm)

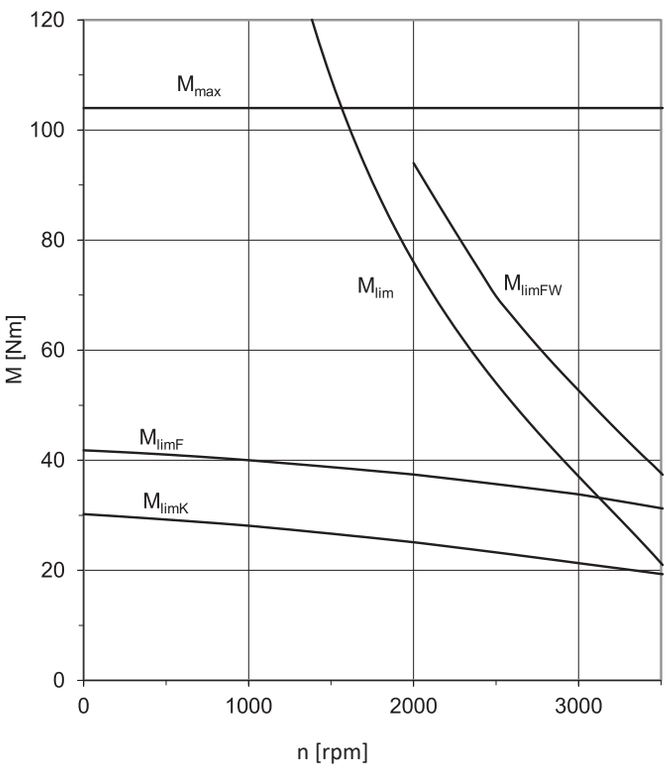

EZ705 (n_N=4500 rpm)

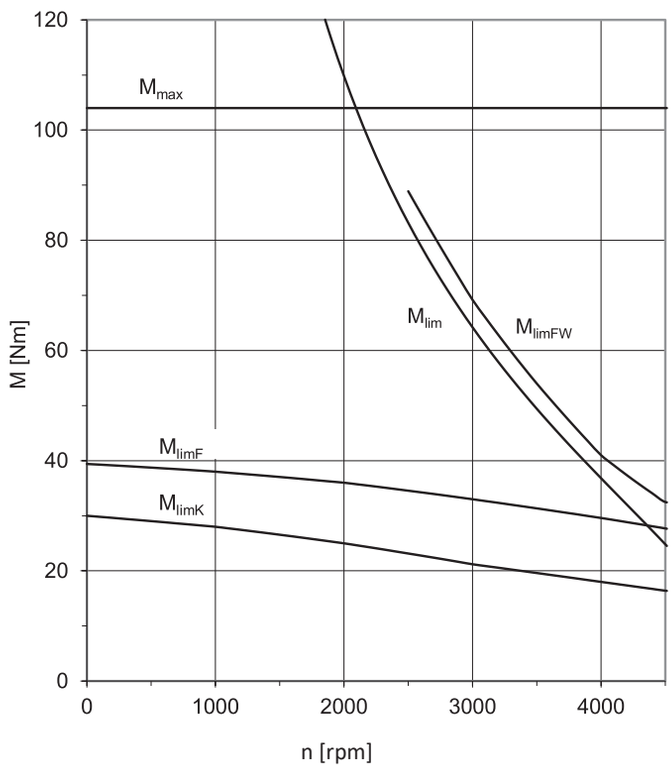

EZ802 (n_N=3000 rpm)

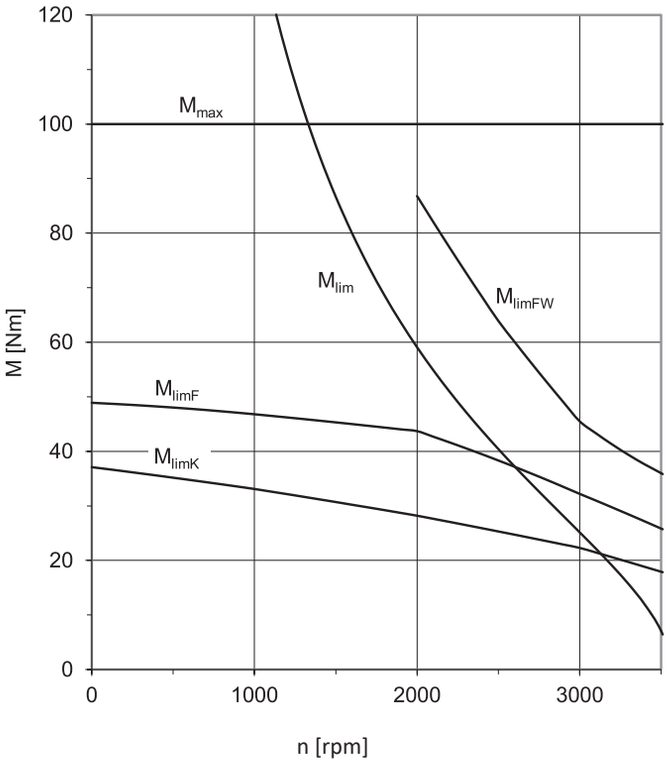

EZ802 (n_N=4500 rpm)

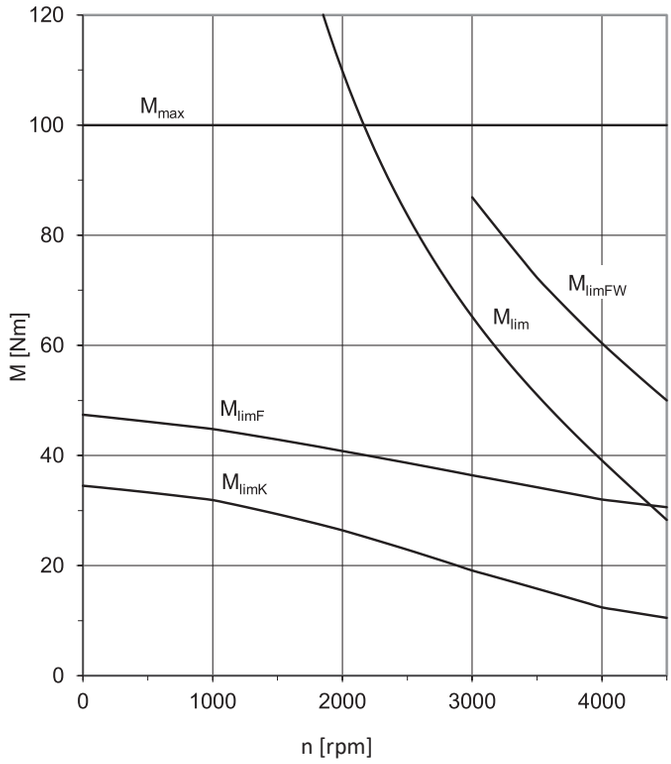

EZ803 (n_N=3000 rpm)

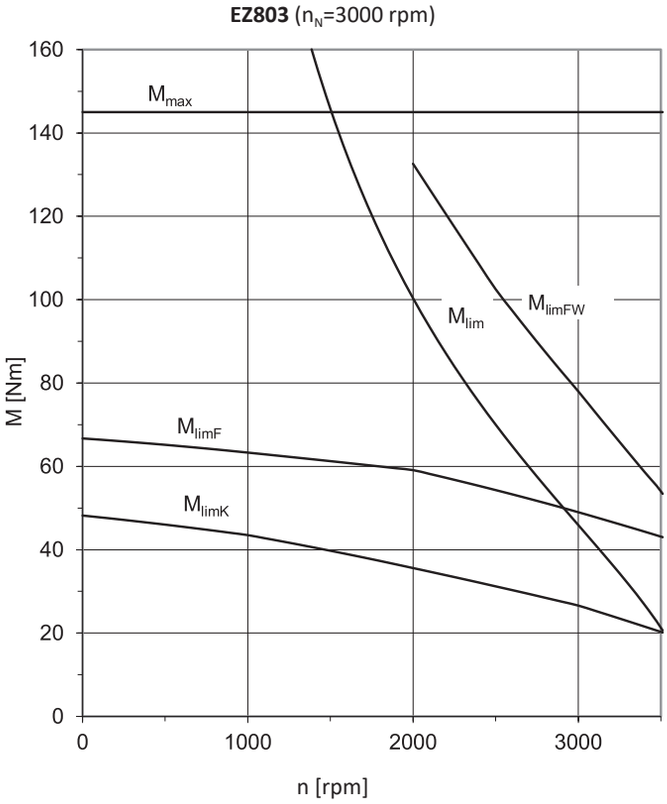

EZ805 (n_N=2000 rpm)

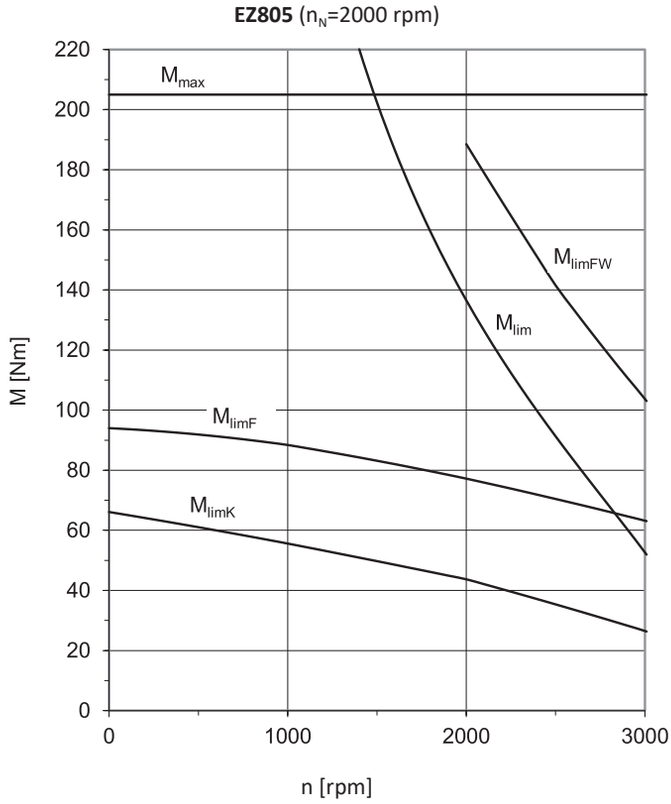

7.4 Dimensional drawings

In this chapter, you can find the dimensions of the motors.

Dimensions can exceed the specifications of ISO 2768-mK due to casting tolerances or accumulation of individual tolerances.

We reserve the right to make dimensional changes due to ongoing technical development.

You can download 3D models of our standard drives at http://configurator.stoeber.de.

Tolerances

Solid shaft	Tolerance
Shaft ∅ fit ≤ 50 mm	DIN 748-1, ISO k6
Shaft ∅ fit > 50 mm	DIN 748-1, ISO m6

Centering holes in solid shafts in accordance with DIN 332-2, DR shape

Thread size	M4	M5	M6	M8	M10	M12	M16	M20	M24
Thread depth [mm]	10	12.5	16	19	22	28	36	42	50

7.4.1 EZ3 motors (One Cable Solution)

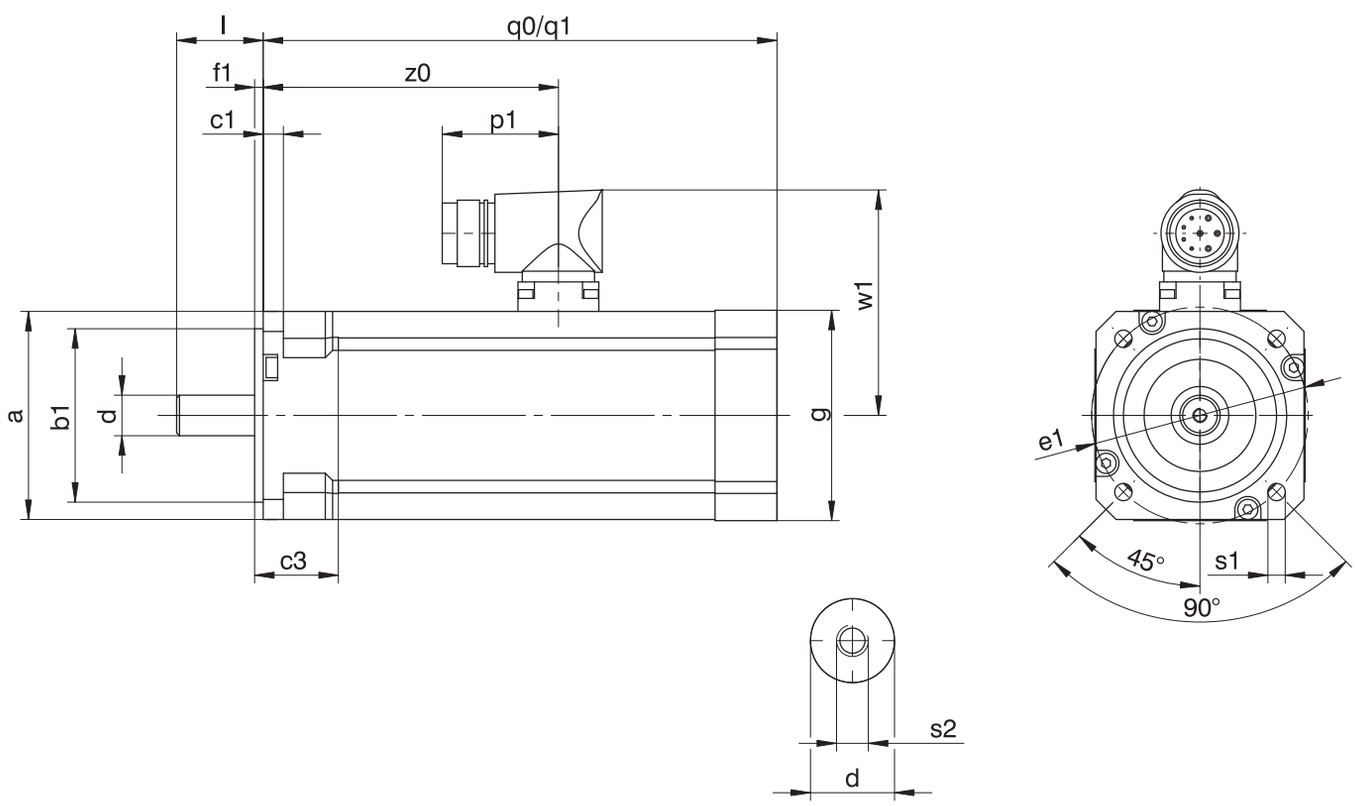

q0 Applies to motors without holding brake

q1 Applies to motors with holding brake

Type	□a	Øb1	c1	c3	Ød	Øe1	f1	□g	l	p1	q0	q1	Øs1	s2	w1	z0
EZ301U	72	60_{j6}	7	26	14_{k6}	75	3	72	30	40	116	156	6	M5	78	80.5
EZ302U	72	60_{j6}	7	26	14_{k6}	75	3	72	30	40	138	178	6	M5	78	102.5
EZ303U	72	60_{j6}	7	26	14_{k6}	75	3	72	30	40	160	200	6	M5	78	124.5

7.4.2 EZ3 motors

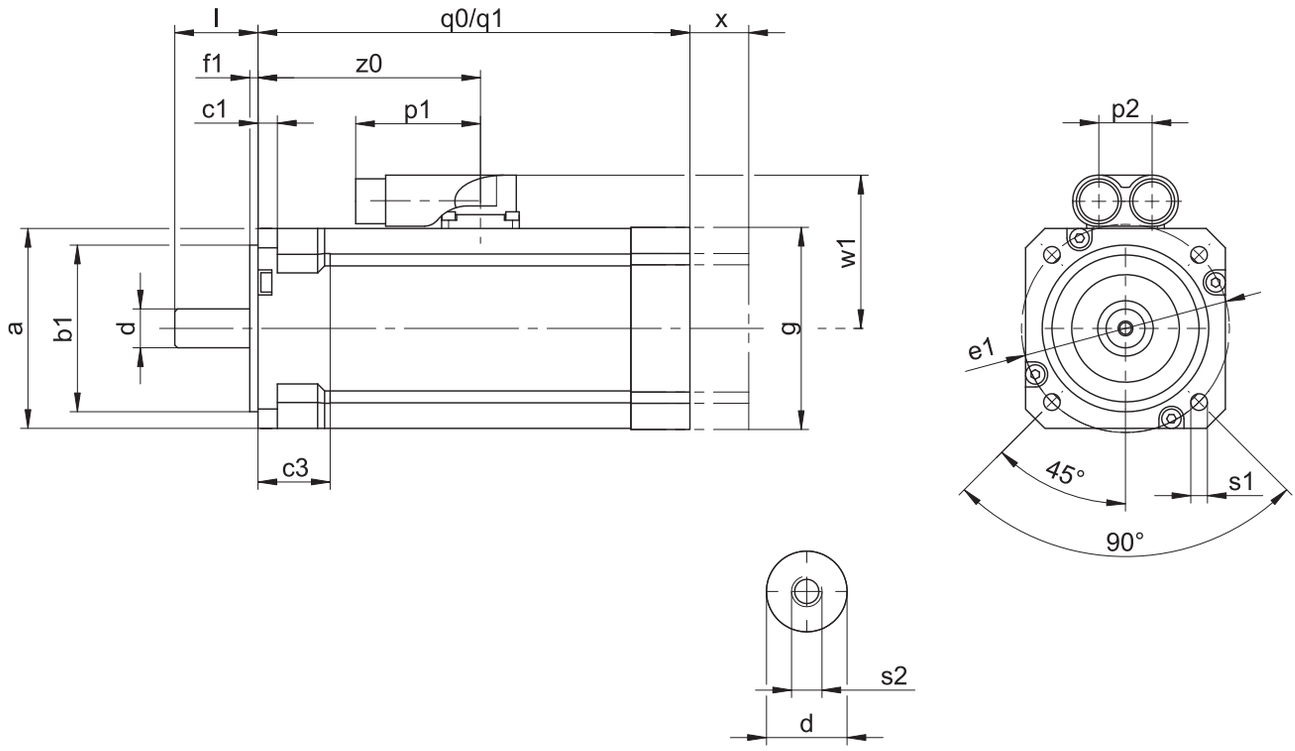

q0	Applies to motors without holding brake	q1	Applies to motors with holding brake
x	Applies to encoders based on an optical measuring method		

Type	□a	Øb1	c1	c3	Ød	Øe1	f1	□g	l	p1	p2	q0	q1	Øs1	s2	w1	x	z0
EZ301U	72	60_{j6}	7	26	14_{k6}	75	3	72	30	45	19	116	156	6	M5	55.5	21	80.5
EZ302U	72	60_{j6}	7	26	14_{k6}	75	3	72	30	45	19	138	178	6	M5	55.5	21	102.5
EZ303U	72	60_{j6}	7	26	14_{k6}	75	3	72	30	45	19	160	200	6	M5	55.5	21	124.5

7.4.3 EZ4 – EZ7 motors with convection cooling (One Cable Solution)

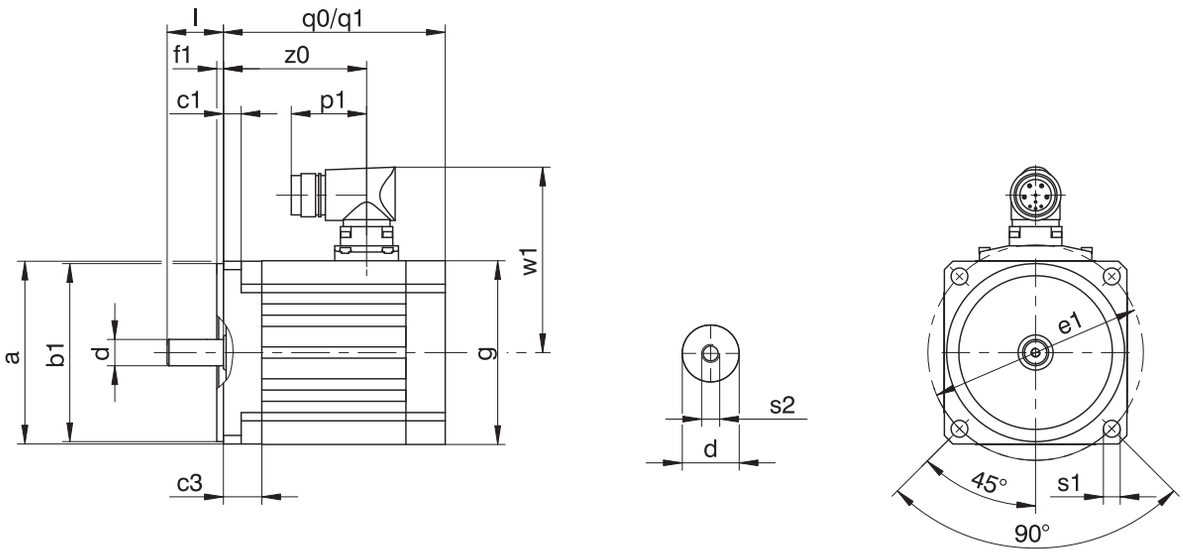

q0 Applies to motors without holding brake

q1 Applies to motors with holding brake

Type	□a	Øb1	c1	c3	Ød	Øe1	f1	□g	l	p1	q0	q1	Øs1	s2	w1	z0
EZ401U	98	95_{j6}	9.5	20.5	14_{k6}	115	3.5	98	30	40	118.5	167.0	9	M5	99	76.5
EZ402U	98	95_{j6}	9.5	20.5	19_{k6}	115	3.5	98	40	40	143.5	192.0	9	M6	99	101.5
EZ404U	98	95_{j6}	9.5	20.5	19_{k6}	115	3.5	98	40	40	193.5	242.0	9	M6	99	151.5
EZ501U	115	110_{j6}	10.0	16.0	19_{k6}	130	3.5	115	40	40	109.0	163.5	9	M6	110	74.5
EZ502U	115	110_{j6}	10.0	16.0	19_{k6}	130	3.5	115	40	40	134.0	188.5	9	M6	110	99.5
EZ503U	115	110_{j6}	10.0	16.0	24_{k6}	130	3.5	115	50	40	159.0	213.5	9	M8	110	124.5
EZ505U	115	110_{j6}	10.0	16.0	24_{k6}	130	3.5	115	50	40	209.0	263.5	9	M8	110	174.5
EZ701U	145	130_{j6}	10.0	19.0	24_{k6}	165	3.5	145	50	40	121.0	180.0	11	M8	125	83.0
EZ702U	145	130_{j6}	10.0	19.0	24_{k6}	165	3.5	145	50	40	146.0	205.0	11	M8	125	108.0
EZ703U	145	130_{j6}	10.0	19.0	24_{k6}	165	3.5	145	50	40	171.0	230.0	11	M8	125	133.0
EZ705U	145	130_{j6}	10.0	19.0	32_{k6}	165	3.5	145	58	71	226.0	285.0	11	M12	125	184.0

7.4.4 EZ4 – EZ8 motors with convection cooling

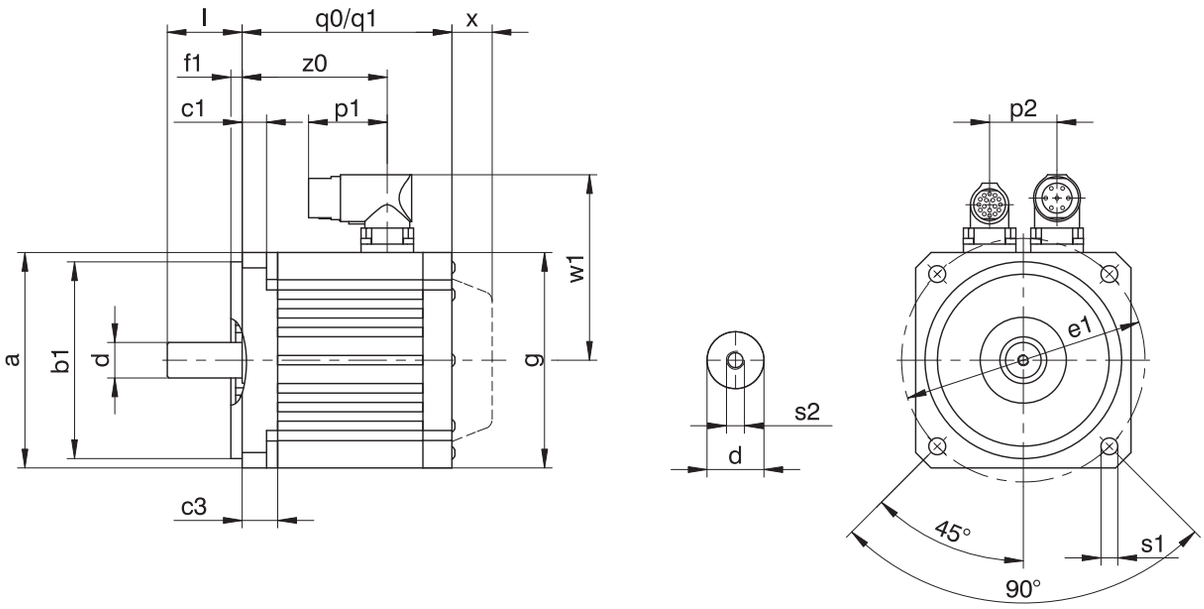

q0 Applies to motors without holding brake

q1 Applies to motors with holding brake

x Applies to encoders based on an optical measuring method

Type	□a	Øb1	c1	c3	Ød	Øe1	f1	□g	l	p1	p2	q0	q1	Øs1	s2	w1	x	z0
EZ401U	98	95_{j6}	9.5	20.5	14_{k6}	115	3.5	98	30	40	32	118.5	167.0	9	M5	91.0	22	76.5
EZ402U	98	95_{j6}	9.5	20.5	19_{k6}	115	3.5	98	40	40	32	143.5	192.0	9	M6	91.0	22	101.5
EZ404U	98	95_{j6}	9.5	20.5	19_{k6}	115	3.5	98	40	40	32	193.5	242.0	9	M6	91.0	22	151.5
EZ501U	115	110_{j6}	10.0	16.0	19_{k6}	130	3.5	115	40	40	36	109.0	163.5	9	M6	100.0	22	74.5
EZ502U	115	110_{j6}	10.0	16.0	19_{k6}	130	3.5	115	40	40	36	134.0	188.5	9	M6	100.0	22	99.5
EZ503U	115	110_{j6}	10.0	16.0	24_{k6}	130	3.5	115	50	40	36	159.0	213.5	9	M8	100.0	22	124.5
EZ505U	115	110_{j6}	10.0	16.0	24_{k6}	130	3.5	115	50	40	36	209.0	263.5	9	M8	100.0	22	174.5
EZ701U	145	130_{j6}	10.0	19.0	24_{k6}	165	3.5	145	50	40	42	121.0	180.0	11	M8	115.0	22	83.0
EZ702U	145	130_{j6}	10.0	19.0	24_{k6}	165	3.5	145	50	40	42	146.0	205.0	11	M8	115.0	22	108.0
EZ703U	145	130_{j6}	10.0	19.0	24_{k6}	165	3.5	145	50	40	42	171.0	230.0	11	M8	115.0	22	133.0
EZ705U	145	130_{j6}	10.0	19.0	32_{k6}	165	3.5	145	58	71	42	226.0	285.0	11	M12	134.0	22	184.0
EZ802U	190	180_{j6}	15.0	25.0	32_{k6}	215	3.5	190	58	71	60	222.0	299.0	13.5	M12	156.5	22	168.0
EZ803U	190	180_{j6}	15.0	25.0	38_{k6}	215	3.5	190	80	71	60	263.0	340.0	13.5	M12	156.5	22	209.0
EZ805U	190	180_{j6}	15.0	25.0	38_{k6}	215	3.5	190	80	71	60	345.0	422.0	13.5	M12	156.5	22	277.0

7.4.5 EZ4 – EZ7 motors with forced ventilation (One Cable Solution)

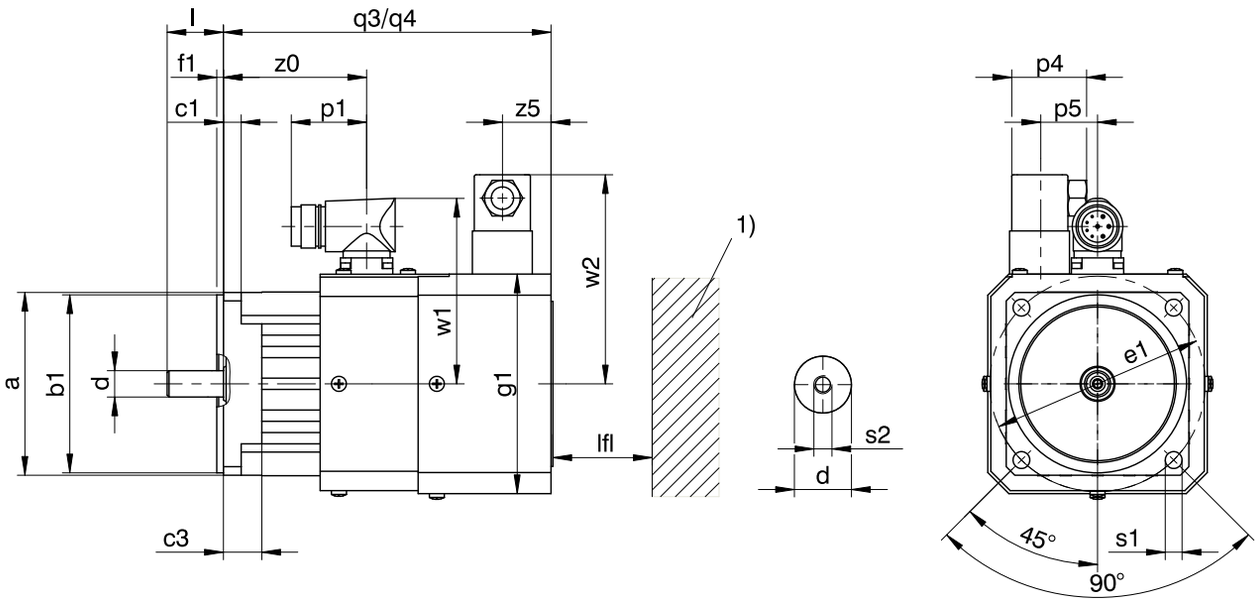

q3 Applies to motors without holding brake

q4 Applies to motors with holding brake

1) Machine wall

Type	□a	Øb1	c1	c3	Ød	Øe1	f1	□g1	l	lfl_{min}	p1	p4	p5	q3	q4	Øs1	s2	w1	w2	z0	z5
EZ401B	98	95_{j6}	9.5	20.5	14_{k6}	115	3.5	118	30	20	40	37.5	0	175	224	9.0	M5	99	111	76.5	25
EZ402B	98	95_{j6}	9.5	20.5	19_{k6}	115	3.5	118	40	20	40	37.5	0	200	249	9.0	M6	99	111	101.5	25
EZ404B	98	95_{j6}	9.5	20.5	19_{k6}	115	3.5	118	40	20	40	37.5	0	250	299	9.0	M6	99	111	151.5	25
EZ501B	115	110_{j6}	10.0	16.0	19_{k6}	130	3.5	135	40	20	40	37.5	0	179	234	9.0	M6	110	120	74.5	25
EZ502B	115	110_{j6}	10.0	16.0	19_{k6}	130	3.5	135	40	20	40	37.5	0	204	259	9.0	M6	110	120	99.5	25
EZ503B	115	110_{j6}	10.0	16.0	24_{k6}	130	3.5	135	50	20	40	37.5	0	229	284	9.0	M8	110	120	124.5	25
EZ505B	115	110_{j6}	10.0	16.0	24_{k6}	130	3.5	135	50	20	40	37.5	0	279	334	9.0	M8	110	120	174.5	25
EZ701B	145	130_{j6}	10.0	19.0	24_{k6}	165	3.5	165	50	30	40	37.5	0	213	272	11.0	M8	125	134	83.0	40
EZ702B	145	130_{j6}	10.0	19.0	24_{k6}	165	3.5	165	50	30	40	37.5	0	238	297	11.0	M8	125	134	108.0	40
EZ703B	145	130_{j6}	10.0	19.0	24_{k6}	165	3.5	165	50	30	40	37.5	0	263	322	11.0	M8	125	134	133.0	40

7.4.6 EZ4 – EZ8 motors with forced ventilation

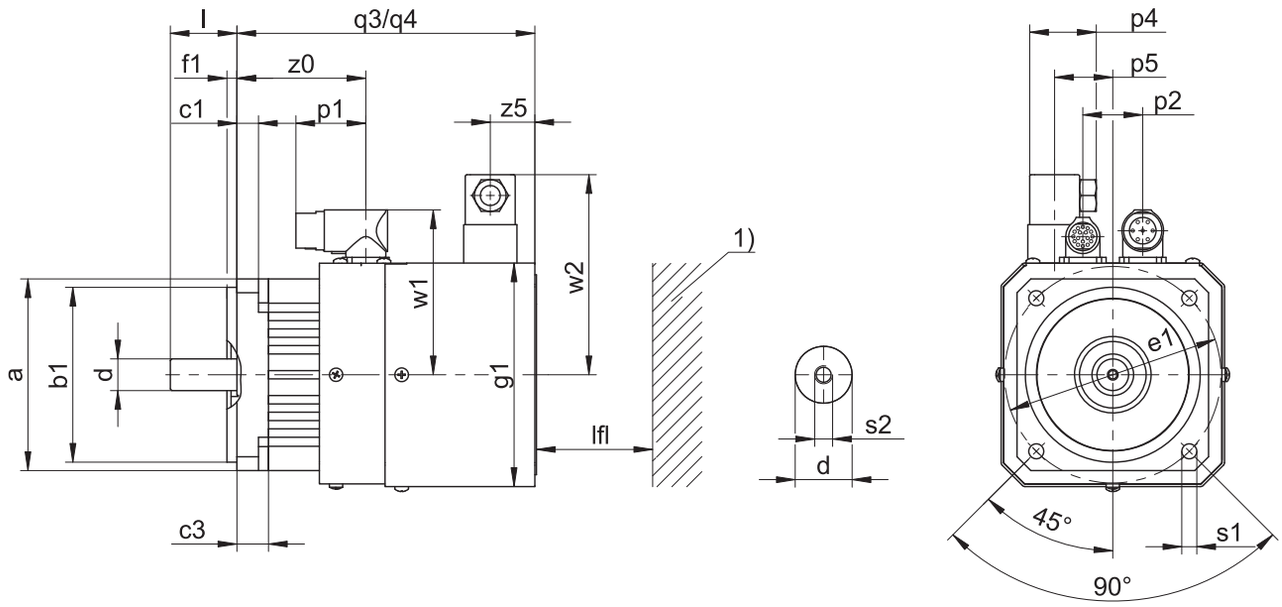

q3 Applies to motors without holding brake

q4 Applies to motors with holding brake

1) Machine wall

Type	□a	Øb1	c1	c3	Ød	Øe1	f1	□g1	l	lfl_{min}	p1	p2	p4	p5	q3	q4	Øs1	s2	w1	w2	z0	z5
EZ401B	98	95_{j6}	9.5	20.5	14_{k6}	115	3.5	118	30	20	40	32	37.5	0	175	224	9.0	M5	91.0	111	76.5	25
EZ402B	98	95_{j6}	9.5	20.5	19_{k6}	115	3.5	118	40	20	40	32	37.5	0	200	249	9.0	M6	91.0	111	101.5	25
EZ404B	98	95_{j6}	9.5	20.5	19_{k6}	115	3.5	118	40	20	40	32	37.5	0	250	299	9.0	M6	91.0	111	151.5	25
EZ501B	115	110_{j6}	10.0	16.0	19_{k6}	130	3.5	135	40	20	40	36	37.5	0	179	234	9.0	M6	100.0	120	74.5	25
EZ502B	115	110_{j6}	10.0	16.0	19_{k6}	130	3.5	135	40	20	40	36	37.5	0	204	259	9.0	M6	100.0	120	99.5	25
EZ503B	115	110_{j6}	10.0	16.0	24_{k6}	130	3.5	135	50	20	40	36	37.5	0	229	284	9.0	M8	100.0	120	124.5	25
EZ505B	115	110_{j6}	10.0	16.0	24_{k6}	130	3.5	135	50	20	40	36	37.5	0	279	334	9.0	M8	100.0	120	174.5	25
EZ701B	145	130_{j6}	10.0	19.0	24_{k6}	165	3.5	165	50	30	40	42	37.5	0	213	272	11.0	M8	115.0	134	83.0	40
EZ702B	145	130_{j6}	10.0	19.0	24_{k6}	165	3.5	165	50	30	40	42	37.5	0	238	297	11.0	M8	115.0	134	108.0	40
EZ703B	145	130_{j6}	10.0	19.0	24_{k6}	165	3.5	165	50	30	40	42	37.5	0	263	322	11.0	M8	115.0	134	133.0	40
EZ705B	145	130_{j6}	10.0	19.0	32_{k6}	165	3.5	165	58	30	71	42	37.5	0	318	377	11.0	M12	134.0	134	184.0	40
EZ802B	190	180_{j6}	15.0	25.0	32_{k6}	215	3.5	215	58	30	71	60	37.5	62	322	399	13.5	M12	156.5	160	168.0	40
EZ803B	190	180_{j6}	15.0	25.0	38_{k6}	215	3.5	215	80	30	71	60	37.5	62	363	440	13.5	M12	156.5	160	209.0	40
EZ805B	190	180_{j6}	15.0	25.0	38_{k6}	215	3.5	215	80	30	71	60	37.5	62	445	522	13.5	M12	178.0	160	277.0	40

7.5 Type designation

Sample code

EZ	4	0	1	U	D	BB	Q7	O	096

Explanation

Code	Designation	Design
EZ	Type	Synchronous servo motor
4	Size	4 (example)
0	Generation	0
1	Length	1 (example)
U	Cooling[1]	Convection cooling
B		Forced ventilation
D	Design	Dynamic
BB	Drive controller	SI6 (example)
Q7	Encoder	EnDat 3 EQI 1131 (example)
O	Brake	Without holding brake
P		Permanent magnet holding brake
096	Voltage constant K_{EM}	96 V/1000 rpm (example)

Notes

- In Chapter [▸ 7.6.4], you can find information about available encoders.
- In Chapter [▸ 7.6.4.6], you can find information about connecting synchronous servo motors to other drive controllers from STOBER.

7.6 Product description

7.6.1 General features

Feature	Description
Design	IM B5, IM V1, IM V3 in accordance with EN 60034-7
Protection class	IP56 / IP66 (option)
Thermal class	155 (F) in accordance with EN 60034-1 (155 °C, heating Δϑ = 100 K)
Surface	Matte black as per RAL 9005
Cooling	IC 410 convection cooling (IC 416 convection cooling with forced ventilation units, optional)
Bearing	Rolling bearing with lifetime lubrication and non-contact sealing
Sealing	Radial shaft seal rings made of FKM (A side)
Shaft	Shaft without feather key, diameter quality k6
Radial runout	Normal tolerance class in accordance with IEC 60072-1
Concentricity	Normal tolerance class in accordance with IEC 60072-1
Axial runout	Normal tolerance class in accordance with IEC 60072-1
Vibration intensity	A in accordance with EN 60034-14
Noise level	Limit values in accordance with EN 60034-9

[1] EZ3 motors only available with convection cooling

7.6.2 Electrical features

General electrical features of the motor are described in this chapter. Details can be found in the "Selection tables" chapter.

Feature	Description
DC link voltage	DC 540 V (max. 620 V) on STOBER drive controllers
Winding	Three-phase, single-tooth coil design
Circuit	Star, center not led through
Protection class	I (protective grounding) in accordance with EN 61140
Number of pole pairs	5 (EZ3) 7 (EZ4/EZ5/EZ7) 8 (EZ8)

7.6.3 Ambient conditions

Standard ambient conditions for transport, storage and operation of the motor are described in this chapter. Information about differing ambient conditions can be found in the chapter Derating.

Feature	Description
Surrounding temperature for transport/storage	−30 °C to +85 °C
Surrounding temperature for operation	−15 °C to +40 °C
Relative humidity	5% to 95%, no condensation
Installation altitude	≤ 1000 m above sea level
Shock load	≤ 50 m/s^2 (5 g), 6 ms in accordance with EN 60068-2-27

Notes

- STOBER synchronous servo motors are not suitable for potentially explosive atmospheres.
- Secure the power cables close to the motor so that vibrations of the cable do not place impermissible loads on the motor plug connector.
- Note that the braking torques of the holding brake (optional) may be reduced by shock loading.
- At operating temperatures below 0 °C, note that the discs of the holding brake (optional) may ice up.
- Also take into consideration the shock load of the motor due to output units (such as gear units and pumps) which are coupled with the motor.

7.6.4 Encoders

STOBER synchronous servo motors can be designed with different encoder models. The following chapters include information for choosing the optimal encoder for your application.

7.6.4.1 Encoder measuring method selection tool

The following table offers a selection tool for an encoder measuring method that is optimally suited for your application.

Feature	Absolute encoder		Resolver
Measuring method	Optical	Inductive	Electromagnetic
Temperature resistance	★★☆	★★★	★★★
Vibration strength and shock resistance	★★☆	★★★	★★★
System accuracy	★★★	★★☆	★☆☆
FMA version with fault exclusion for mechanical coupling (option with EnDat interface)	✓	✓	–
Elimination of referencing with multi-turn design (optional)	✓	✓	–
Simple commissioning with electronic nameplate	✓	✓	–
Key: ★☆☆ = satisfactory, ★★☆ = good, ★★★ = very good			

7.6.4.2 Selection tool for EnDat interface

The following table offers a selection tool for the EnDat interface of absolute encoders.

Feature	EnDat 2.1	EnDat 2.2	EnDat 3
Short cycle times	★★☆	★★★	★★★
Transfer of additional information along with the position value	–	✓	✓
Expanded power supply range	★★☆	★★★	★★★
One Cable Solution (OCS)	–	–	✓
Key: ★★☆ = good, ★★★ = very good			

7.6.4.3 EnDat 2 encoders

In this chapter, you can find detailed technical data for encoder models that can be selected with EnDat interface.

Encoders with EnDat 2.2 interface

Encoder model	Code	Measuring method	Recordable revolutions	Resolution	Position values per revolution
EnDat 2.2 EQI 1131	Q6	Inductive	4096	19 bit	524288
EnDat 2.2 EBI 1135	B0	Inductive	65536	18 bit	262144
EnDat 2.2 EQN 1135 FMA	M3	Optical	4096	23 bit	8388608
EnDat 2.2 EQN 1135	Q5	Optical	4096	23 bit	8388608
EnDat 2.2 ECN 1123 FMA	M1	Optical	–	23 bit	8388608
EnDat 2.2 ECN 1123	C7	Optical	–	23 bit	8388608
EnDat 2.2 ECI 1118-G2	C5	Inductive	–	18 bit	262144

Encoders with EnDat 2.1 interface

Encoder model	Code	Measuring method	Recordable revolutions	Resolution	Position values per revolution	Periods per revolution
EnDat 2.1 EQN 1125 FMA	M2	Optical	4096	13 bit	8192	Sin/Cos 512
EnDat 2.1 EQN 1125	Q4	Optical	4096	13 bit	8192	Sin/Cos 512
EnDat 2.1 ECN 1113 FMA	M0	Optical	–	13 bit	8192	Sin/Cos 512
EnDat 2.1 ECN 1113	C6	Optical	–	13 bit	8192	Sin/Cos 512

Notes

- The encoder code is a part of the type designation of the motor.
- FMA = Version with fault exclusion for mechanical coupling.
- The EnDat 2.2 EBI 1135 encoder requires an external buffer battery so that absolute position information is retained after the power supply is turned off (AES option for STOBER drive controllers).
- Multiple revolutions of the motor shaft can be recorded only using multi-turn encoders.

7.6.4.4 EnDat 3 encoders

EnDat 3 is a robust, purely digital protocol that functions with minimal connection lines. EnDat 3 facilitates the One Cable Solution, which allows the connection lines between the encoder and drive controller to be routed along in the motor's power cable.

The One Cable Solution offers the following advantages:

- Significantly reduced wiring effort by eliminating the encoder cable
- For cable lengths up to 50 m, a choke between the drive controller and motor is not necessary
- Advanced safety functions possible (up to SIL2 / category 3, PLd)
- Significantly reduced space requirements by eliminating the encoder plug connector
- Transmission of measured values from the temperature sensor using the EnDat 3 protocol

A motor with the EnDat 3 encoder can be operated only on a SI6 or SC6 drive controller from STOBER.

The EnDat 3 encoder has the following features:

Encoder model	Code	Measuring method	Recordable revolutions	Resolution	Position values per revolution
EnDat 3 EQI 1131	Q7	Inductive	4096	19 bit	524288

7.6.4.5 Resolver

In this chapter, you can find detailed technical data for the resolver that can be installed as an encoder in a STOBER synchronous servo motor.

Feature	Description
Input voltage U_{1eff}	7 V ± 5%
Input frequency f_1	10 kHz
Output voltage $U_{2,S1–S3}$	$K_{tr} \cdot U_{R1–R2} \cdot \cos \theta$
Output voltage $U_{2,S2–S4}$	$K_{tr} \cdot U_{R1–R2} \cdot \sin \theta$
Transformation ratio K_{tr}	0.5 ± 5%
Electrical fault	±10 arcmin

7.6.4.6 Possible combinations with drive controllers

The following table shows the options for combining STOBER drive controllers with selectable encoder models.

Drive controller		**SDS 5000**		**SD6**		**SI6**			**SC6**		
Drive controller code		AA	AC	AD	AE	AP	AQ	**BB**	AU	AV	**BA**
Connection plan ID		442305	442307	442450	442451	442771	442772	**443175**	443052	443053	**443174**
Encoder	**Encoder code**										
EnDat 3 EQI 1131	Q7	–	–	–	–	–	–	✓	–	–	✓
EnDat 2.2 EQI 1131	Q6	✓	–	✓	–	✓	–	–	✓	–	–
EnDat 2.2 EBI 1135	B0	✓	–	✓	–	✓	–	–	✓	–	–
EnDat 2.2 EQN 1135 FMA	M3	✓	–	✓	–	–	–	–	–	–	–
EnDat 2.2 EQN 1135	Q5	✓	–	✓	–	✓	–	–	✓	–	–
EnDat 2.2 ECN 1123 FMA	M1	✓	–	✓	–	–	–	–	–	–	–
EnDat 2.2 ECN 1123	C7	✓	–	✓	–	✓	–	–	✓	–	–
EnDat 2.2 ECI 1118-G2	C5	✓	–	✓	–	✓	–	–	✓	–	–
EnDat 2.1 EQN 1125 FMA	M2	✓	✓	✓	✓	–	–	–	–	–	–
EnDat 2.1 EQN 1125	Q4	✓	✓	✓	✓	–	–	–	–	–	–
EnDat 2.1 ECN 1113 FMA	M0	✓	✓	✓	✓	–	–	–	–	–	–
EnDat 2.1 ECN 1113	C6	✓	✓	✓	✓	–	–	–	–	–	–
Resolver	R0	✓	–	–	✓	–	✓	–	–	✓	–

Notes

- The drive controller and encoder codes are a part of the type designation of the motor (see the "Type designation" chapter).

7.6.5 Temperature sensor

In this chapter, you can find technical data for the temperature sensors that are installed in STOBER synchronous servo motors for implementing thermal winding protection. To prevent damage to the motor, always monitor the temperature sensor with appropriate devices that will turn off the motor if the maximum permitted winding temperature is exceeded.

Some encoders feature integrated temperature monitoring, the warning and switch-off thresholds of which may overlap with the corresponding values set for the temperature sensor in the drive controller. In some cases, this may result in an instance where an encoder with internal temperature monitoring forces the motor to shut down, even before the motor has reached its nominal data.

You can find information about the electrical connection of the temperature sensor in the "Connection method" chapter.

7.6.5.1 PTC thermistor

The PTC thermistor is installed as a standard temperature sensor in STOBER synchronous servo motors.

The PTC thermistor is a triple thermistor in accordance with DIN 44082 that can be used for monitoring the temperature of each winding phase. The resistance values in the following table and curve refer to a single thermistor in accordance with DIN 44081. These values must be multiplied by 3 for a triple thermistor in accordance with DIN 44082.

Feature	Description
Nominal response temperature ϑ_{NAT}	145 °C ± 5 K
Resistance R −20 °C up to ϑ_{NAT} − 20 K	≤ 250 Ω
Resistance R with ϑ_{NAT} − 5 K	≤ 550 Ω
Resistance R with ϑ_{NAT} + 5 K	≥ 1330 Ω
Resistance R with ϑ_{NAT} + 15 K	≥ 4000 Ω
Operating voltage	≤ DC 7.5 V
Thermal response time	< 5 s
Thermal class	155 (F) in accordance with EN 60034-1 (155 °C, heating Δϑ = 100 K)

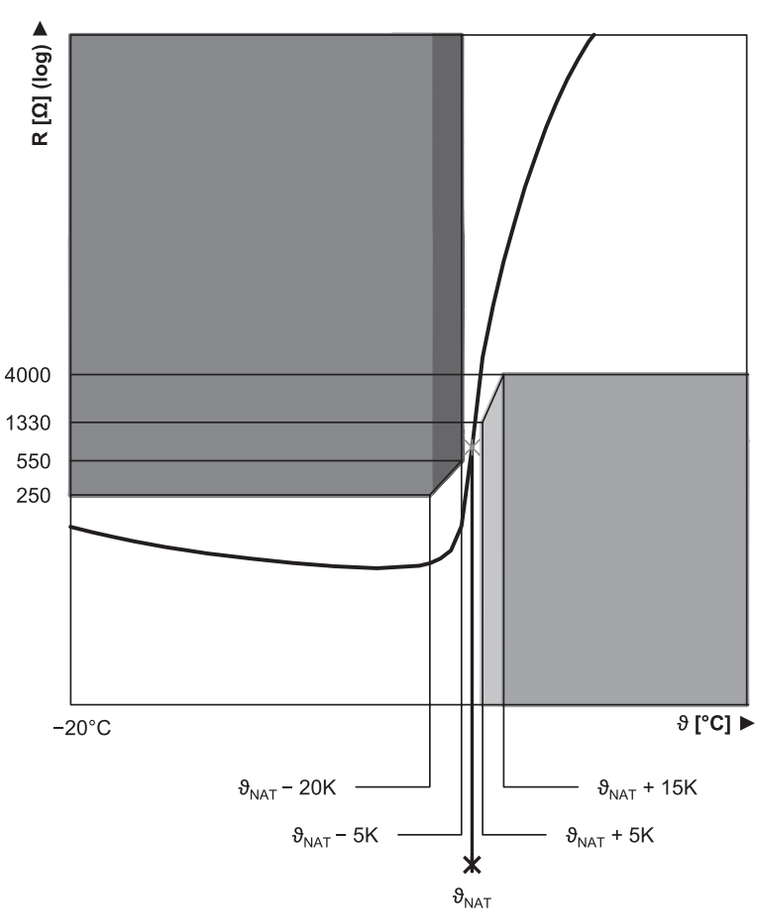

Fig. 2: PTC thermistor curve (single thermistor)

7.6.5.2 Pt1000 temperature sensor

STOBER synchronous servo motors are available in versions with a Pt1000 temperature sensor. The Pt1000 is a temperature-dependent resistor that has a resistance curve with a linear relationship with temperature. As a result, the Pt1000 allows for measurements of the winding temperature. These measurements are limited to one phase of the motor winding, however. In order to adequately protect the motor from exceeding the maximum permitted winding temperature, use a i^2t model in the drive controller to monitor the winding temperature.

Pt1000 temperature sensors can also be used with the One Cable Solution.

Avoid exceeding the specified measurement current so that the measured values are not falsified due to self-heating of the temperature sensor.

Feature	Description
Measurement current (constant)	2 mA
Resistance R for ϑ = 0 °C	1000 Ω
Resistance R for ϑ = 80 °C	1300 Ω
Resistance R for ϑ = 150 °C	1570 Ω

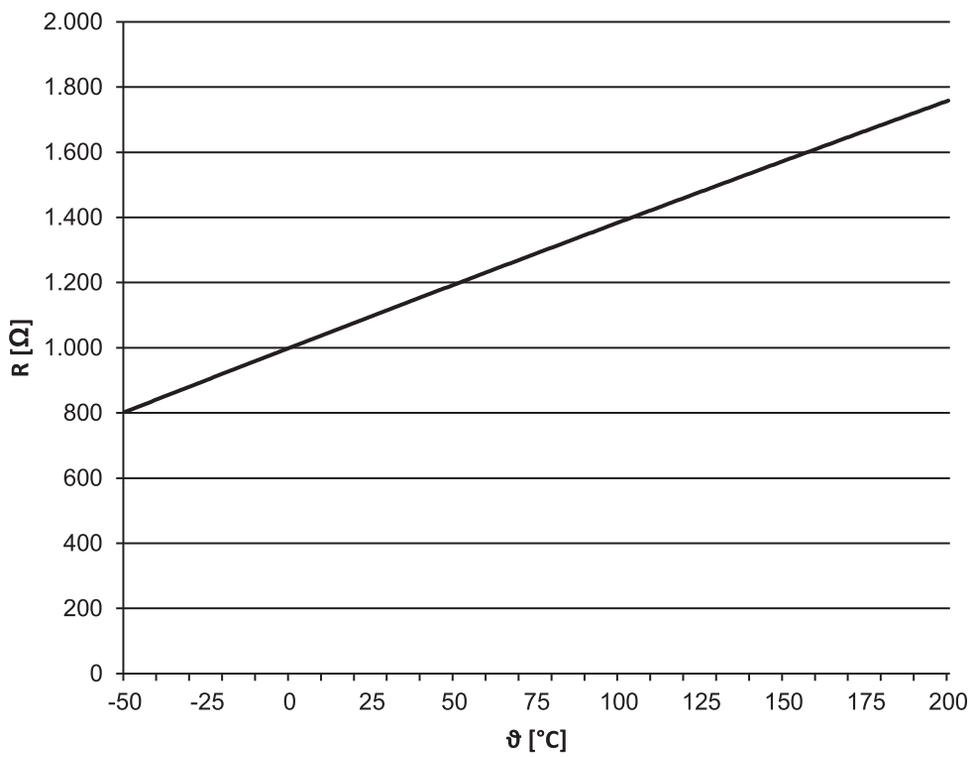

Fig. 3: Pt1000 temperature sensor characteristic curve

7.6.6 Cooling

A synchronous servo motor in the standard version is cooled by convection cooling (IC 410 in accordance with EN 60034-6). The air flowing around the motor is heated by the radiated motor heat and rises. Optionally, forced ventilation can be used to cool the motor.

7.6.6.1 Forced ventilation

STOBER synchronous servo motors offer the option of being cooled with forced ventilation in order to increase performance data while maintaining the same size. Retrofitting with a forced ventilation unit is also possible in order to optimize the drive at a later date. When retrofitting, check whether the conductor cross-section of the power cable of the motor must be increased. Also take into account the dimensions of the forced ventilation unit.

The performance data for motors with forced ventilation can be found in the chapter Selection tables and the dimensions in the chapter Dimensional drawings.

Technical data

Motor	Forced ventilation unit	$U_{N,F}$ [V]	$I_{N,F}$ [A]	$P_{N,F}$ [W]	$q_{v,F}$ [m³/h]	$L_{p(A)}$ [dBA]	m_F [kg]	Protection class
EZ4_B	FL4	230 V ± 5%, 50/60 Hz	0.07	10	59	41	1.4	IP44
EZ5_B	FL5		0.10	14	160	45	1.9	IP54
EZ7_B	FL7		0.10	14	160	45	2.9	IP54
EZ8_B	FL8		0.20	26	420	54	5.0	IP55

Terminal assignment for forced ventilation unit plug connectors

Connection diagram	Pin	Connection
	1	L1 (phase)
	2	N (neutral conductor)
	3	
	⏚	Grounding conductor

7.6.7 Holding brake

STOBER synchronous servo motors can be equipped with a backlash-free holding brake using permanent magnets in order to secure the motor shaft when at a standstill. The holding brake engages automatically if the voltage drops.

The holding brake is designed for a high number of operations (B_{10} = 10 million operations, B_{10d} = 20 million operations).

Nominal voltage of permanent magnet holding brake: DC 24 V ± 5%, smoothed.

Observe the following during project configuration:

- The holding brake is designed to keep the motor shaft from moving. Activate braking processes during operation using the corresponding electrical functions of the drive controller. In exceptional circumstances, the holding brake can be used for braking from full speed (following a power failure or when setting up the machine). The maximum permitted work done by friction $W_{B,Rmax/h}$ may not be exceeded.
- Note that the braking torque M_{Bdyn} may initially be up to 50% less when braking from full speed. As a result, the braking effect has a delayed action and braking distances become longer.
- Regularly perform a brake test to ensure the functional safety of the brakes. Details can be found in the documentation of the motor and the drive controller.
- Connect a varistor of type S14 K35 (or comparable) in parallel to the brake coil to protect your machine from switching surges. (Not necessary for connecting the holding brake to STOBER drive controllers of the 5th and 6th generation with a BRS/BRM brake module).
- The holding brake of the motor does not offer adequate safety for persons in the hazardous area of gravity-loaded vertical axes. Therefore take additional measures to minimize risk, e.g. by providing a mechanical substructure for maintenance work.
- Take into consideration voltage losses in the connection cables that connect the voltage source to the holding brake connections.
- The holding torque of the brake can be reduced by shock loading. Information about shock loading can be found in the "Ambient conditions" chapter.
- At operating temperatures from −15 °C to 0 °C, a cold holding brake in the released state may cause operating noises. As the temperature of the holding brake increases, these noises decrease such that operating noises are not heard when using holding brake at operating temperature in the released state.

Calculation of work done by friction per braking process

$$W_{B,R/B} = \frac{J_{tot} \cdot n^2}{182.4} \cdot \frac{M_{Bdyn}}{M_{Bdyn} \pm M_L}, \; M_{Bdyn} > M_L$$

The sign of M_L is positive if the movement runs vertically upwards or horizontally and it is negative if the movement runs vertically down.

Calculation of the stop time

$$t_{dec} = 2.66 \cdot t_{1B} + \frac{n \cdot J_{tot}}{9.55 \cdot M_{Bdyn}}$$

Switching behavior

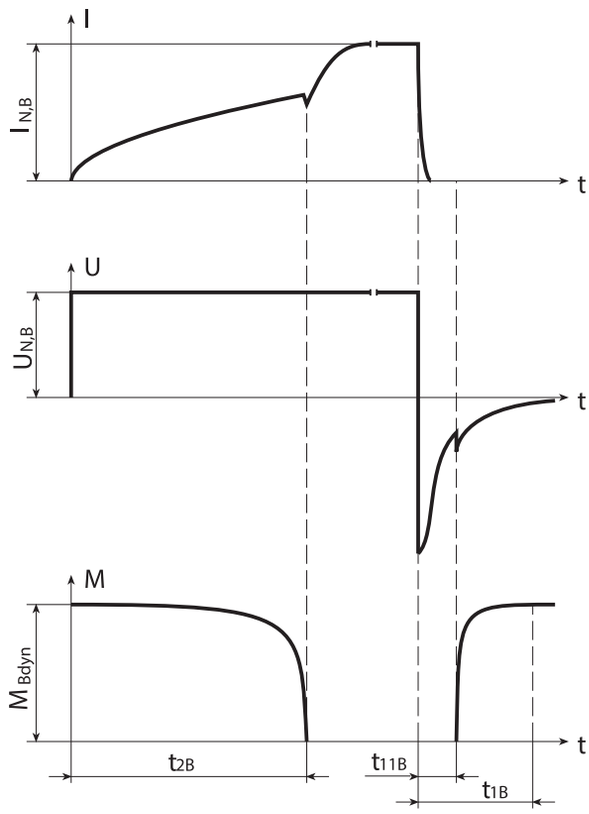

Fig. 4: Holding brake – Switching behavior

Technical data

Type	M_{Bstat} [Nm]	M_{Bdyn} [Nm]	$I_{N,B}$ [A]	$W_{B,Rmax/h}$ [kJ/h]	N_{Bstop}	J_{Bstop} [kgcm²]	$W_{B,Rlim}$ [kJ]	t_{2B} [ms]	t_{11B} [ms]	t_{1B} [ms]	$x_{B,N}$ [mm]	ΔJ_B [kgcm²]	Δm_B [kg]
EZ301	2.5	2.3	0.51	6.0	48000	0.752	180	25	3.0	20	0.2	0.186	0.55
EZ302	4.0	3.8	0.50	8.5	38000	0.952	180	44	4.0	26	0.3	0.186	0.55
EZ303	4.0	3.8	0.50	8.5	30000	1.17	180	44	4.0	26	0.3	0.186	0.55
EZ401	4.0	3.8	0.50	8.5	16000	2.24	180	44	4.0	26	0.3	0.192	0.76
EZ402	8.0	7.0	0.75	8.5	13500	4.39	300	40	2.0	20	0.3	0.566	0.97
EZ404	8.0	7.0	0.75	8.5	8500	7.09	300	40	2.0	20	0.3	0.566	0.97
EZ501	8.0	7.0	0.75	8.5	8700	6.94	300	40	2.0	20	0.3	0.571	1.19
EZ502	8.0	7.0	0.80	8.5	5200	11.5	300	40	2.0	20	0.3	0.571	1.19
EZ503	15	12	1.0	11.0	5900	18.6	550	60	5.0	30	0.3	1.721	1.62
EZ505	15	12	1.0	11.0	4000	27.8	550	60	5.0	30	0.3	1.721	1.62
EZ701	15	12	1.0	11.0	5400	20.5	550	60	5.0	30	0.3	1.743	1.94
EZ702	15	12	1.0	11.0	3600	30.9	550	60	5.0	30	0.3	1.743	1.94
EZ703	32	28	1.1	25.0	5200	54.6	1400	100	5.0	25	0.4	5.680	2.81
EZ705	32	28	1.1	25.0	3500	79.4	1400	100	5.0	25	0.4	5.680	2.81
EZ802	65	35	1.7	45.0	6000	149	2250	200	10	50	0.4	16.460	5.40
EZ803	65	35	1.7	45.0	4500	200	2250	200	10	50	0.4	16.460	5.40
EZ805	115	70	2.1	65.0	7000	376	6500	190	12	65	0.5	55.460	8.40

7.6.8 Connection method

The following chapters describe the connection technology of STOBER synchronous servo motors in the standard version on STOBER drive controllers. You can find further information relating to the drive controller type that was specified in your order in the connection plan that is delivered with every synchronous servo motor.

7.6.8.1 Connection of the motor housing to the grounding conductor system

Connect the motor housing to the grounding conductor system of the machine in order to prevent personal injury and faulty triggering of residual current protective devices.

All attachment parts required for the connection of the grounding conductor to the motor housing are delivered with the motor. The grounding screw of the motor is identified with the symbol ⏚ in accordance with IEC 60417-DB. The cross-section of the grounding conductor has to be at least as large as the cross-section of the lines in the power connection.

7.6.8.2 Plug connectors (One Cable Solution)

In the One Cable Solution design, the power and encoder lines are connected using a shared plug connector.

For motors with forced ventilation, avoid collisions between the motor connection cables and the plug connector of the forced ventilation unit. In the event of a collision, turn the motor plug connectors accordingly. Details regarding the position of the plug connector for the forced ventilation unit can be found in the "Dimensional drawings" chapter.

The figures represent the position of the plug connectors upon delivery.

Turning ranges of plug connectors (EZ3 motors)

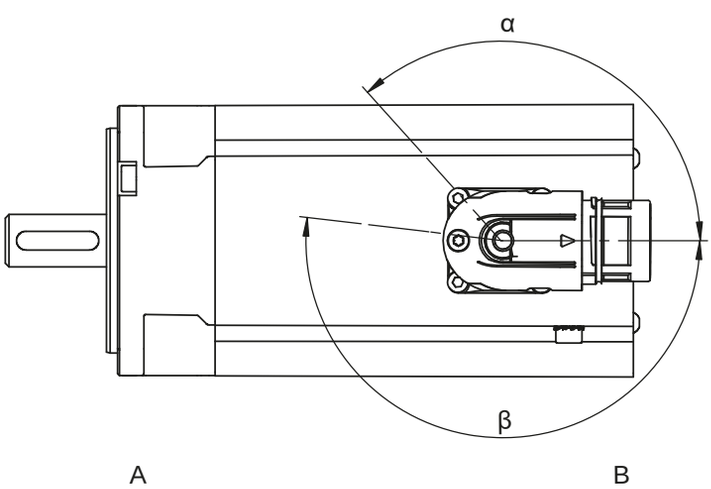

A	Attachment or output side of the motor	B	Rear side of the motor

Turning ranges of plug connectors (EZ4 – EZ7 motors)

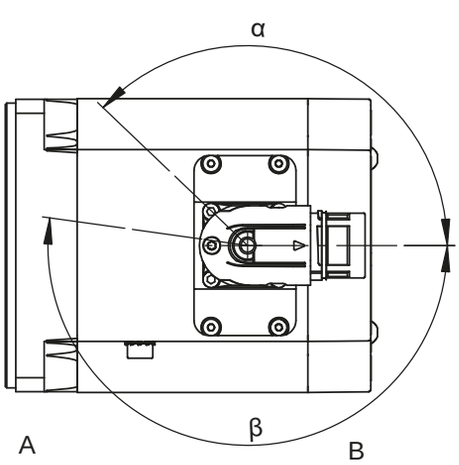

A	Attachment or output side of the motor	B	Rear side of the motor

Plug connector features

Motor type	Size	Connection	Turning range	
			α	β
EZ3 – EZ5, EZ701 – EZ703, EZ705U	con.23	Quick lock	130°	190°

Notes

- The number after "con." indicates the approximate external thread diameter of the plug connector in mm (for example, con.23 designates a plug connector with an external thread diameter of about 23 mm).

7.6.8.3 Plug connectors

STOBER synchronous servo motors are equipped with twistable quick-lock plug connectors in the standard version (except for plug connector size con.58). Details can be found in this chapter.

For motors with forced ventilation, avoid collisions between the motor connection cables and the plug connector of the forced ventilation unit. In the event of a collision, turn the motor plug connectors accordingly. Details regarding the position of the plug connector for the forced ventilation unit can be found in the "Dimensional drawings" chapter.

The figures represent the position of the plug connectors upon delivery.

Turning ranges of plug connectors (EZ3 motors)

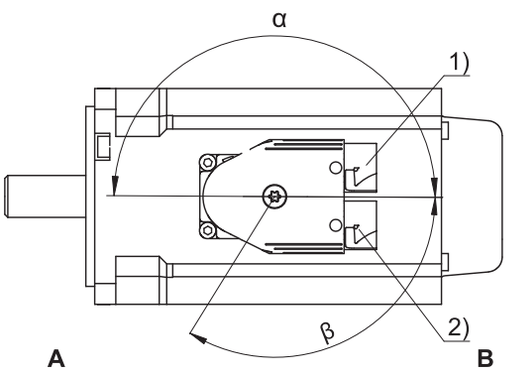

1	Power plug connector	2	Encoder plug connector
A	Attachment or output side of the motor	B	Rear side of the motor

Turning ranges of plug connectors (EZ4 – EZ8 motors)

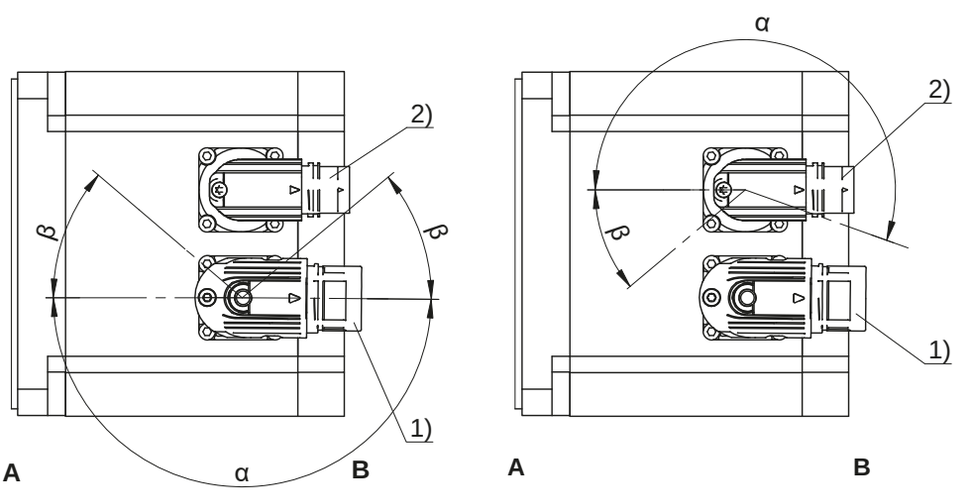

1	Power plug connector	2	Encoder plug connector
A	Attachment or output side of the motor	B	Rear side of the motor

Power plug connector features

Motor type	Size	Connection	Turning range	
			α	β
EZ3	con.15	Quick lock	180°	140°
EZ4, EZ5, EZ701, EZ702, EZ703	con.23	Quick lock	180°	40°
EZ705, EZ802, EZ803, EZ805U	con.40	Quick lock	180°	40°
EZ805B	con.58	Screw thread[2]	0°	0°

Encoder plug connector features

Motor type	Size	Connection	Turning range	
			α	β
EZ3	con.15	Quick lock	180°	140°
EZ4, EZ5, EZ7, EZ802, EZ803, EZ805U	con.17	Quick lock	195°	35°
EZ805B	con.17	Quick lock	180°	0°

Notes

- The number after "con." indicates the approximate external thread diameter of the plug connector in mm (for example, con.23 designates a plug connector with an external thread diameter of about 23 mm).
- In turning range β, the power or encoder plug connectors can be turned only if doing so does not cause them to collide.
- For the EZ3 motor, the power and encoder plug connectors are mechanically connected and can only be turned together.

7.6.8.4 Terminal assignment for plug connectors (One Cable Solution)

In the One Cable Solution design, the power and encoder lines are connected using a shared plug connector.

The temperature sensor of the motor is connected to the encoder internally. The measured values from the temperature sensor are transmitted via the EnDat 3 protocol of the encoder.

Plug connector size con.23

Connection diagram	Pin	Connection	Color
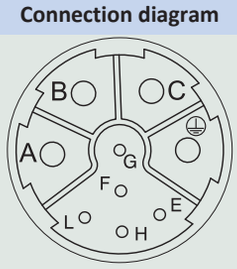	A	U phase	BK
	B	V phase	BU
	C	W phase	RD
	E	P_SD –	YE
	F		
	G	Brake +	
	H	P_SD +	VT
	L	Brake –	
	⏚	Grounding conductor	GNYE

7.6.8.5 Connection assignment of the power plug connector

The size and connection plan of the power plug connector depend on the size of the motor. The colors of the connecting wires inside the motor are specified in accordance with IEC 60757.

Plug connector size con.15

Connection diagram	Pin	Connection	Color
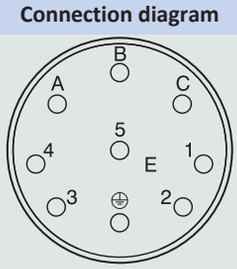	A	U phase	BK
	B	V phase	BU
	C	W phase	RD
	1	Temperature sensor +	
	2	Temperature sensor –	
	3	Brake +	RD
	4	Brake –	BK
	⏚	Grounding conductor	GNYE

[2] Specify alignment on side A or B in the purchase order.

Plug connector size con.23

Connection diagram	Pin	Connection	Color
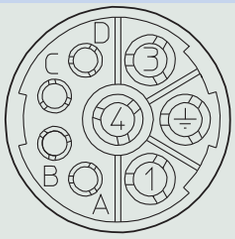	1	U phase	BK
	3	V phase	BU
	4	W phase	RD
	A	Brake +	RD
	B	Brake –	BK
	C	Temperature sensor +	
	D	Temperature sensor –	
	⏚	Grounding conductor	GNYE

Plug connector size con.40 (1.5)

Connection diagram	Pin	Connection	Color
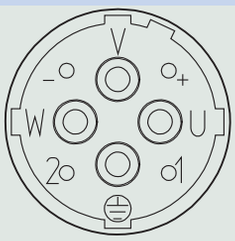	U	U phase	BK
	V	V phase	BU
	W	W phase	RD
	+	Brake +	RD
	–	Brake –	BK
	1	Temperature sensor +	
	2	Temperature sensor –	
	⏚	Grounding conductor	GNYE

Plug connector size con.58 (3)

Connection diagram	Pin	Connection	Color
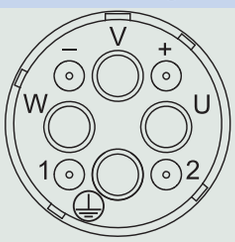	U	U phase	BK
	V	V phase	BU
	W	W phase	RD
	+	Brake +	RD
	–	Brake –	BK
	1	Temperature sensor +	
	2	Temperature sensor –	
	⏚	Grounding conductor	GNYE

7.6.8.6 Connection assignment of the encoder plug connector

The size and connection assignment of the encoder plug connectors depend on the model of encoder installed and the size of the motor.

EnDat 2.1/2.2 digital encoders, plug connector size con.15

Connection diagram	Pin	Connection	Color
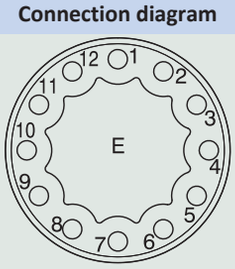	1	Clock +	VT
	2	Up sense	BNGN
	3		
	4		
	5	Data –	PK
	6	Data +	GY
	7		
	8	Clock –	YE
	9		
	10	0 V GND	WHGN
	11		
	12	Up +	BNGN
	Pin 2 is connected to pin 12 in the plug connector		

EnDat 2.1/2.2 digital encoders, plug connector size con.17

Connection diagram	Pin	Connection	Color
	1	Clock +	VT
	2	Up sense	BNGN
	3		
	4		
	5	Data –	PK
	6	Data +	GY
	7		
	8	Clock –	YE
	9		
	10	0 V GND	WHGN
	11		
	12	Up +	BNGN
	Pin 2 is connected to pin 12 in the plug connector		

EnDat 2.2 digital encoder with battery buffering, plug connector size con.15

Connection diagram	Pin	Connection	Color
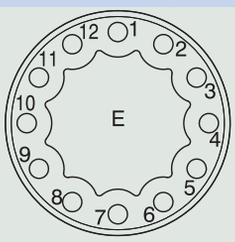	1	Clock +	VT
	2	UBatt +	BU
	3	UBatt –	WH
	4		
	5	Data –	PK
	6	Data +	GY
	7		
	8	Clock –	YE
	9		
	10	0 V GND	WHGN
	11		
	12	Up +	BNGN
	UBatt+ = DC 3.6 V for encoder model EBI in combination with the AES option of STOBER drive controllers		

EnDat 2.2 digital encoder with battery buffering, plug connector size con.17

Connection diagram	Pin	Connection	Color
	1	Clock +	VT
	2	UBatt +	BU
	3	UBatt –	WH
	4		
	5	Data –	PK
	6	Data +	GY
	7		
	8	Clock –	YE
	9		
	10	0 V GND	WHGN
	11		
	12	Up +	BNGN
	UBatt+ = DC 3.6 V for encoder model EBI in combination with the AES option of STOBER drive controllers		

EnDat 2.1 encoder with sin/cos incremental signals, plug connector size con.15

Connection diagram	Pin	Connection	Color
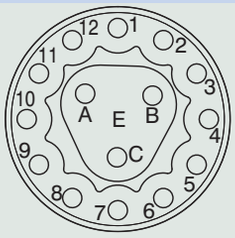	1	Up sense	BU
	2	0 V sense	WH
	3	Up +	BNGN
	4	Clock +	VT
	5	Clock –	YE
	6	0 V GND	WHGN
	7	B + (Sin +)	BUBK
	8	B – (Sin –)	RDBK
	9	Data +	GY
	10	A + (Cos +)	GNBK
	11	A – (Cos –)	YEBK
	12	Data –	PK
	A		
	B		
	C		

EnDat 2.1 encoder with sin/cos incremental signals, plug connector size con.17

Connection diagram	Pin	Connection	Color
	1	Up sense	BU
	2		
	3		
	4	0 V sense	WH
	5		
	6		
	7	Up +	BNGN
	8	Clock +	VT
	9	Clock –	YE
	10	0 V GND	WHGN
	11		
	12	B + (Sin +)	BUBK
	13	B – (Sin –)	RDBK
	14	Data +	GY
	15	A + (Cos +)	GNBK
	16	A – (Cos –)	YEBK
	17	Data –	PK

Resolver, plug connector size con.15

Connection diagram	Pin	Connection	Color
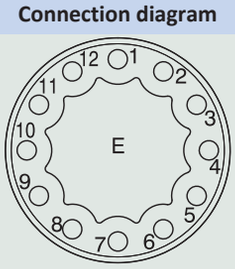	1	S3 Cos +	BK
	2	S1 Cos –	RD
	3	S4 Sin +	BU
	4	S2 Sin –	YE
	5		
	6		
	7	R2 Ref +	YEWH/BKWH[3]
	8	R1 Ref –	RDWH
	9		
	10		
	11		
	12		

[3] (depending on the manufacturer of the resolver)

Resolver, plug connector size con.17

Connection diagram	Pin	Connection	Color
	1	S3 Cos +	BK
	2	S1 Cos –	RD
	3	S4 Sin +	BU
	4	S2 Sin –	YE
	5		
	6		
	7	R2 Ref +	YEWH/BKWH[4]
	8	R1 Ref –	RDWH
	9		
	10		
	11		
	12		

[4] (depending on the manufacturer of the resolver)

7.7 Project configuration

Project your drives using our SERVOsoft designing software. Download SERVOsoft for free at https://www.stoeber.de/en/ServoSoft.

Observe the limit conditions in this chapter to ensure a safe design for your drives.

An explanation of the formula symbols can be found in Chapter Symbols in formulas.

The formula symbols for values actually present in the application are marked with *.

7.7.1 Calculation of the operating point

In this chapter, you can find information needed to calculate the operating point.

Check the following conditions for operating points other than the nominal point M_N specified in the selection tables:

$n_{m*} \leq n_N$

$M_{eff*} \leq M_{limK}$ and $M_{eff*} \leq M_{limF}$

$M_{max*} < M_{max}$

The values for M_N, n_N, M_{max} can be found in the selection tables.

The values for M_{limK} and M_{limF} can be found in the torque/speed curves.

Example of cyclic operation

The following calculations refer to a representation of the power delivered at the motor shaft based on the following example:

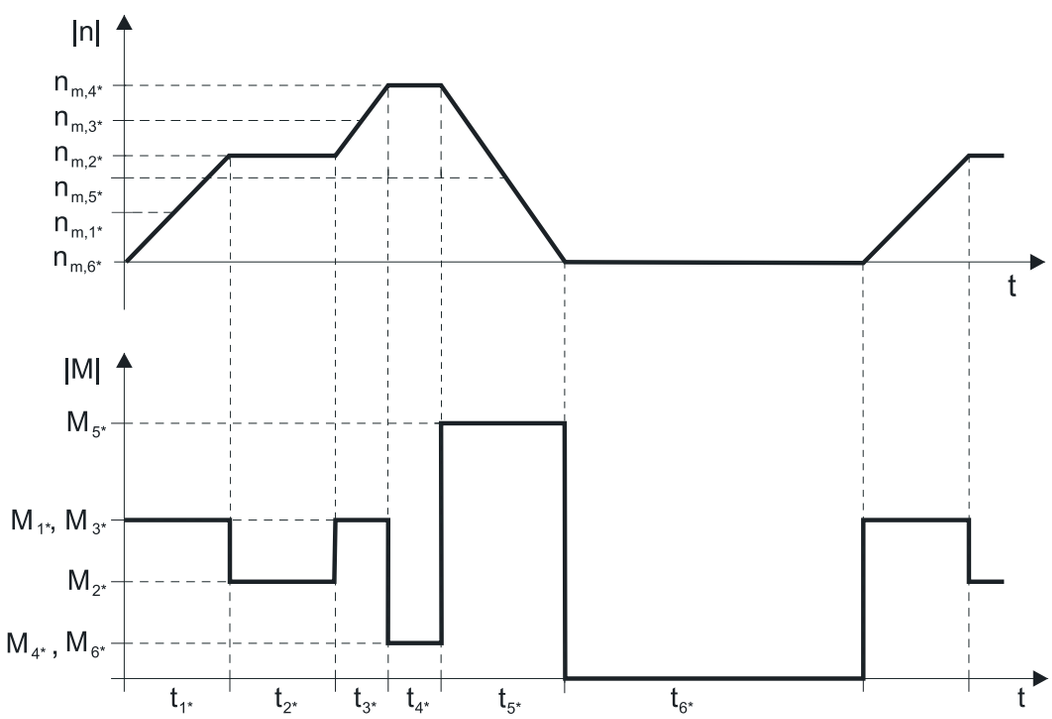

Calculation of the actual average input speed

$$n_{m*} = \frac{|n_{m,1*}| \cdot t_{1*} + \ldots + |n_{m,n*}| \cdot t_{n*}}{t_{1*} + \ldots + t_{n*}}$$

If $t_{1*} + \ldots + t_{5*} \geq 6$ min, determine n_{m*} without the rest phase t_{6*}.

Calculation of the actual effective torque

$$M_{eff*} = \sqrt{\frac{t_{1*} \cdot M_{1*}^2 + \ldots + t_{n*} \cdot M_{n*}^2}{t_{1*} + \ldots + t_{n*}}}$$

7.7.2 Permitted shaft loads

This chapter contains information about the maximum permitted shaft loads of the output shaft of the motor.

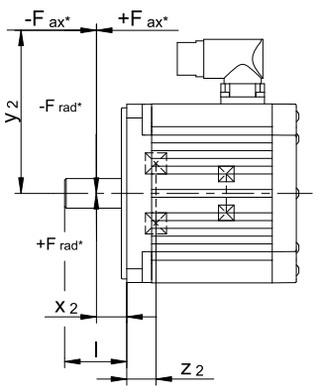

Type	z_2 [mm]	F_{ax100} [N]	F_{rad100} [N]	M_{k100} [Nm]
EZ301	24.0	350	1000	39
EZ302	24.0	350	1000	39
EZ303	24.0	350	1000	39
EZ401	19.5	550	1800	62
EZ402	19.5	550	1800	71
EZ404	19.5	550	1800	71
EZ501	19.5	750	2000	79
EZ502	19.5	750	2400	95
EZ503	19.5	750	2400	107
EZ505	19.5	750	2400	107
EZ701	24.5	1300	3500	173
EZ702	24.5	1300	4200	208
EZ703	24.5	1300	4200	208
EZ705	24.5	1300	4200	225
EZ802	28.5	1750	5600	384
EZ803	28.5	1750	5600	384
EZ805	28.5	1750	5600	384

The values for permitted shaft loads specified in the table apply:

- For shaft dimensions in accordance with the catalog
- A force applied at the center of the output shaft: $x_2 = l / 2$ (shaft dimensions can be found in the chapter [▸ 7.4])
- Output speeds $n_{m*} \leq 100$ rpm ($F_{ax} = F_{ax100}$; $F_{rad} = F_{rad100}$; $M_k = M_{k100}$)

The following applies to output speeds $n_{m*} > 100$ rpm:

$$F_{ax} = \frac{F_{ax100}}{\sqrt[3]{\frac{n_{m*}}{100\ \text{rpm}}}} \qquad F_{rad} = \frac{F_{rad100}}{\sqrt[3]{\frac{n_{m*}}{100\ \text{rpm}}}} \qquad M_k = \frac{M_{k100}}{\sqrt[3]{\frac{n_{m*}}{100\ \text{rpm}}}}$$

The following applies to other force application points:

$$M_{k*} = \frac{2 \cdot F_{ax*} \cdot y_2 + F_{rad*} \cdot (x_2 + z_2)}{1000} \leq M_{k100}$$

$$F_{rad*} \leq F_{rad100}$$

$$F_{ax*} \leq F_{ax100}$$

For applications with multiple axial and/or radial forces, you must add the forces as vectors.

7.7.3 Derating

If you use the motor under ambient conditions that differ from the standard ambient conditions, the nominal torque M_N of the motor is reduced. In this chapter, you can find information for calculating the reduced nominal torque.

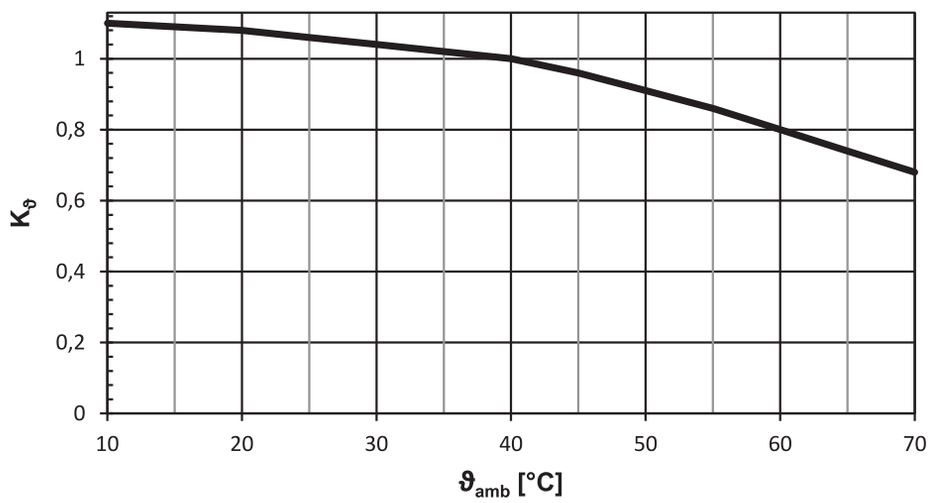

Fig. 5: Derating depending on the surrounding temperature

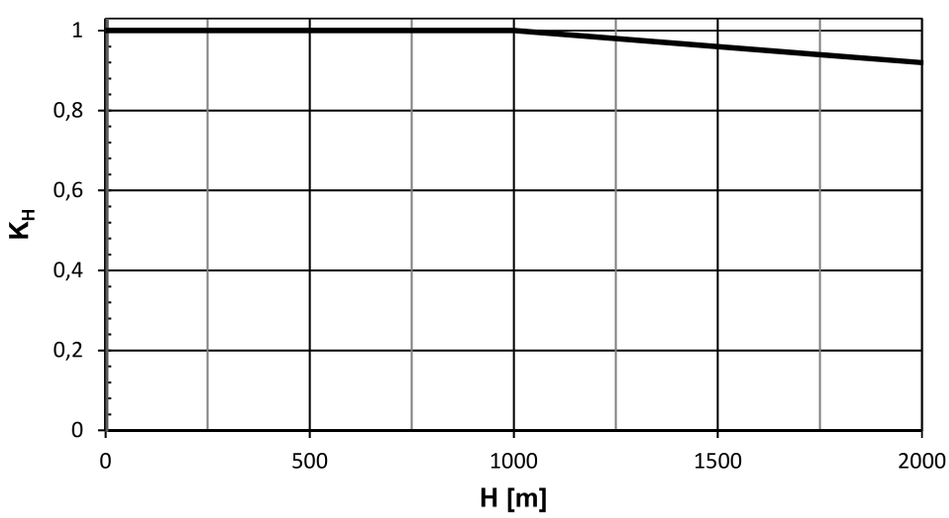

Fig. 6: Derating depending on the installation height

Calculation

If surrounding temperature ϑ_{amb} > 40 °C:

$M_{Nred} = M_N \cdot K_\vartheta$

If installation altitude H > 1000 m above sea level:

$M_{Nred} = M_N \cdot K_H$

If the surrounding temperature ϑ_{amb} > 40 °C and installation altitude H > 1000 m above sea level:

$M_{Nred} = M_N \cdot K_H \cdot K_\vartheta$

7.8 Further information

7.8.1 Directives and standards

STOBER synchronous servo motors meet the requirements of the following directives and standards:

- (Low Voltage) Directive 2014/35/EU
- EN 60034-1:2010 + Cor.:2010
- EN 60034-5:2001 + A1:2007
- EN 60034-6:1993

7.8.2 Identifiers and test symbols

STOBER synchronous servo motors have the following identifiers and test symbols:

CE mark: The product meets the requirements of EU directives.

cURus test symbol "Servo and Stepper Motors – Component"; registered under UL number E488992 with Underwriters Laboratories USA (optional).

7.8.3 Additional documentation

Additional documentation related to the product can be found at
http://www.stoeber.de/en/downloads/

Enter the ID of the documentation in the Search... field.

Documentation	ID
Operating manual for EZ synchronous servo motors	443032_en

8 EZHD synchronous servo motors with hollow shaft

Table of contents

8.1 Overview ... 218

8.2 Selection tables ... 219

8.3 Torque/speed curves ... 220

8.4 Dimensional drawings ... 224

8.4.1 EZHD04 motors ... 224

8.4.2 EZHD05 – EZHD07 motors ... 225

8.5 Type designation ... 226

8.6 Product description ... 226

8.6.1 General features ... 226

8.6.2 Electrical features ... 226

8.6.3 Ambient conditions ... 227

8.6.4 Encoders ... 227

8.6.5 Temperature sensor ... 228

8.6.6 Cooling ... 230

8.6.7 Holding brake ... 230

8.6.8 Connection method ... 232

8.7 Project configuration ... 234

8.7.1 Calculation of the operating point ... 235

8.7.2 Permitted shaft loads ... 236

8.7.3 Derating ... 237

8.8 Further information ... 238

8.8.1 Directives and standards ... 238

8.8.2 Identifiers and test symbols ... 238

8.8.3 Additional documentation ... 238

8

Synchronous servo motors with hollow shaft

EZHD

8.1 Overview

Synchronous servo motors with hollow shaft

Features

Continuous flange hollow shaft for conveying media	✓
Reinforced A-side bearing for absorbing radial forces	✓
Reinforced B-side bearing for absorbing axial forces	✓
High dynamics	✓
Super compact due to tooth-coil winding method with the highest possible copper fill factor	✓
Backlash-free holding brake (optional)	✓
Inductive EnDat absolute encoders	✓
Elimination of referencing with multi-turn absolute encoders (optional)	✓
Electronic nameplate for fast and reliable commissioning	✓
Rotating plug connectors with quick lock	✓

Torques

M_N	1.9 – 24.6 Nm
M_0	2.6 – 31.1 Nm

8.2 Selection tables

The technical data specified in the selection tables applies to:

- Installation altitudes up to 1000 m above sea level
- Surrounding temperatures from −15 °C to +40 °C
- Operation on a STOBER drive controller
- DC link voltage U_{ZK} = DC 540 V
- Coating: RAL 9005 Jet black, matte

In addition, the technical data applies to an uninsulated design with the following thermal mounting conditions:

Type	Dimensions of steel mounting flange (thickness x width x height)	Convection surface area Steel mounting flange
EZHD04 EZHD05	23 x 210 x 275 mm	0.16 m^2
EZHD07	28 x 300 x 400 mm	0.3 m^2

Note the differing ambient conditions in Chapter [▸ 8.7.3]

Formula symbols

An explanation of the formula symbols can be found in Chapter Symbols in formulas.

Observe the additional information on the following formula symbols:

- I_0 = RMS value of the line-to-line current when stall torque M_0 is generated (tolerance ±5%).
- I_{max} = RMS value of the short-term maximum permitted line-to-line current when maximum torque M_{max} is generated (tolerance ±5%). Exceeding I_{max} may lead to irreversible damage (demagnetization) of the rotor.
- I_N = RMS value of the line-to-line current when nominal torque M_N is generated at the nominal point (tolerance ±5%).
- M_0 = Torque that a motor is continuously able to deliver at a speed of 10 rpm (tolerance ±5%). At a speed of 0 rpm, a minor continuous torque has to be taken into account. Contact your STOBER customer advisor for such an application.

Type	K_{EM} [V/1000 rpm]	n_N [rpm]	M_N [Nm]	I_N [A]	$K_{M,N}$ [Nm/A]	P_N [kW]	M_0 [Nm]	I_0 [A]	K_{M0} [Nm/A]	M_R [Nm]	M_{max} [Nm]	I_{max} [A]	R_{U-V} [Ω]	L_{U-V} [mH]	T_{el} [ms]	J [kcgm²]	m [kg]
EZHD0411U	96	3000	1.90	2.36	0.81	0.60	2.60	2.89	1.05	0.44	8.50	16.5	6.70	37.70	5.63	9.35	5.46
EZHD0412U	94	3000	4.20	4.29	0.98	1.3	5.10	4.94	1.12	0.44	16.0	26.5	3.00	21.80	7.26	10.1	6.55
EZHD0414U	116	3000	7.70	6.30	1.22	2.4	8.50	6.88	1.30	0.44	29.0	35.0	1.85	15.00	8.11	11.6	8.55
EZHD0511U	97	3000	3.00	3.32	0.90	0.94	4.10	4.06	1.12	0.44	16.0	22.0	3.80	23.50	6.18	22.3	7.50
EZHD0512U	121	3000	7.00	5.59	1.25	2.2	7.80	6.13	1.34	0.44	31.0	33.0	2.32	16.80	7.24	25.1	8.90
EZHD0513U	119	3000	8.30	7.04	1.18	2.6	10.9	8.76	1.29	0.44	43.0	41.0	1.25	10.00	8.00	27.9	10.3
EZHD0515U	141	3000	14.0	9.46	1.48	4.4	16.4	11.0	1.54	0.44	67.0	52.0	0.93	8.33	8.96	33.6	13.1
EZHD0711U	95	3000	7.30	7.53	0.97	2.3	7.90	7.98	1.07	0.63	20.0	25.0	1.30	12.83	9.87	63.6	13.8
EZHD0712U	133	3000	11.6	8.18	1.42	3.6	14.4	9.99	1.50	0.63	41.0	36.0	1.00	11.73	11.73	72.5	16.2
EZHD0713U	122	3000	17.8	13.4	1.33	5.6	20.4	15.1	1.39	0.63	65.0	62.0	0.52	6.80	13.08	81.4	18.5
EZHD0715U	140	3000	24.6	17.2	1.43	7.7	31.1	21.1	1.50	0.63	104	87.0	0.33	4.80	14.55	100	23.9

8.3 Torque/speed curves

Torque/speed curves depend on the nominal speed and/or winding design of the motor and the DC link voltage of the drive controller that is used. The following torque/speed curves apply to the DC link voltage DC 540 V.

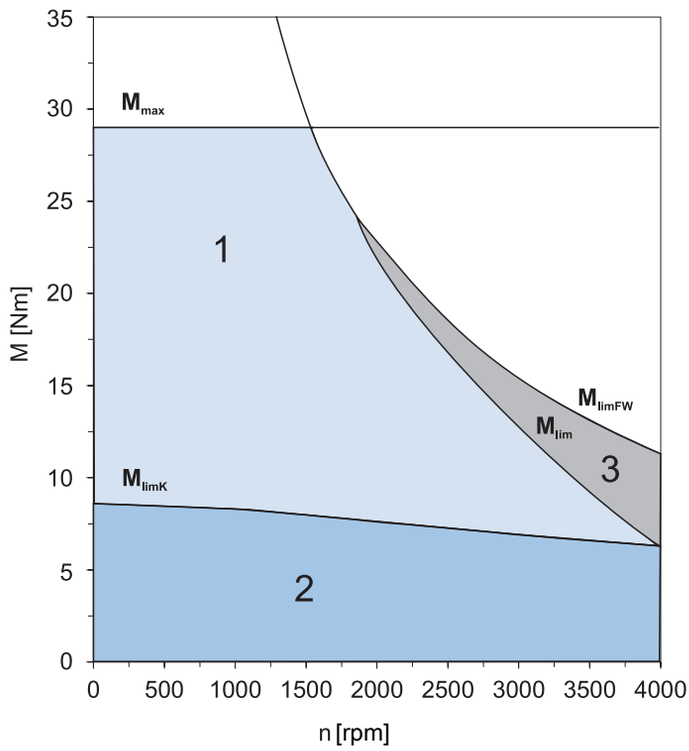

Fig. 1: Explanation of a torque/speed curve

1	Torque range for brief operation (ED_{10} < 100%) with Δϑ = 100 K	2	Torque range for continuous operation with constant load (S1 mode, ED_{10} = 100%) with Δϑ = 100 K
3	Field weakening range (can be used only with operation on STOBER drive controllers)		

EZHD0411U (n_N=3000 rpm)

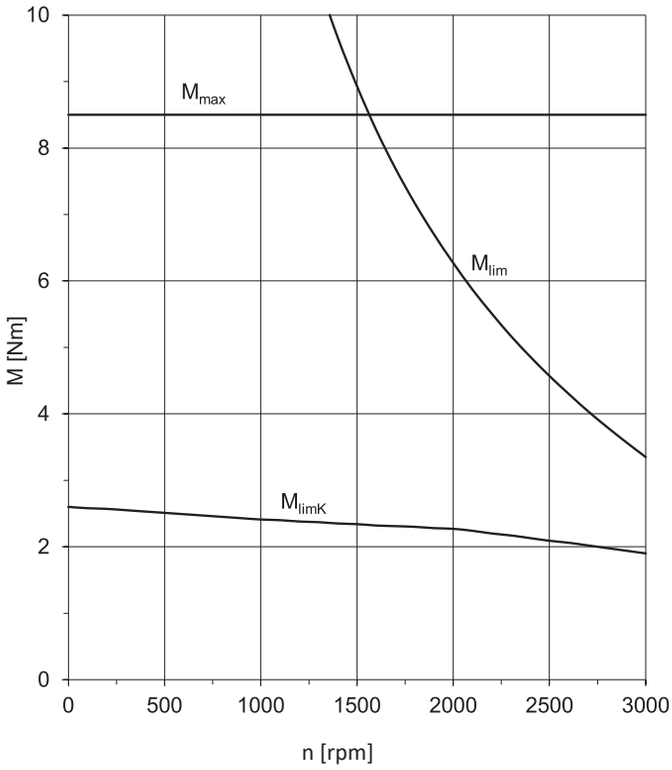

EZHD0412U (n_N=3000 rpm)

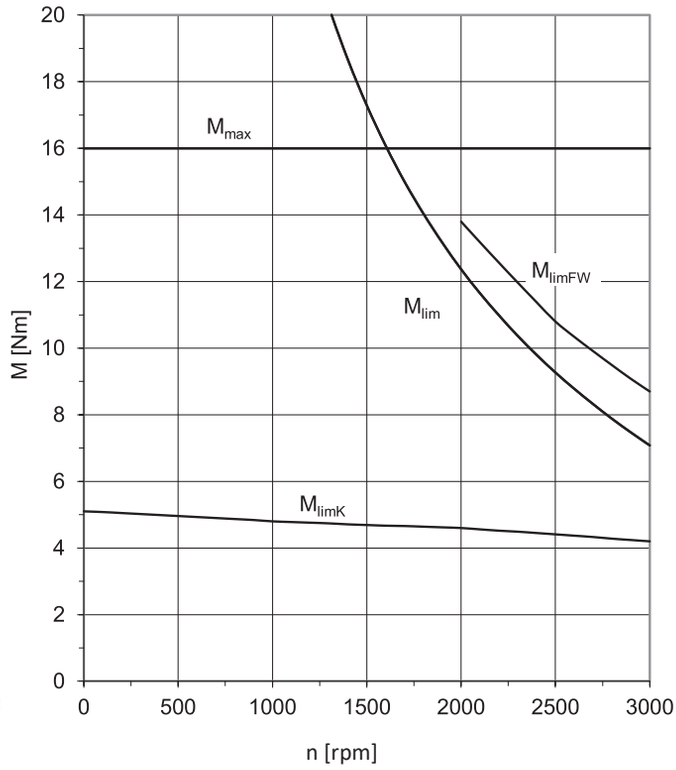

EZHD0414U (n_N=3000 rpm)

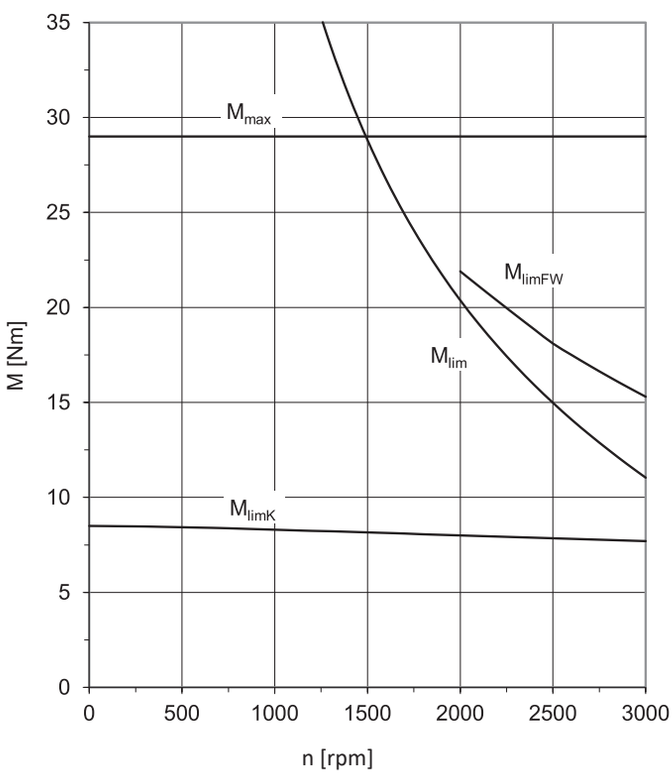

EZHD0511U (n_N=3000 rpm)

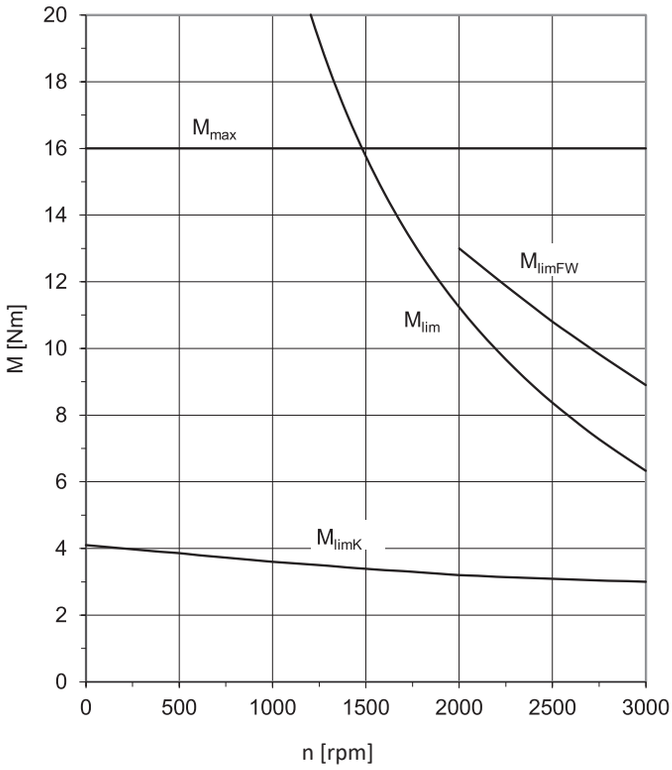

EZHD0512U (n_N=3000 rpm)

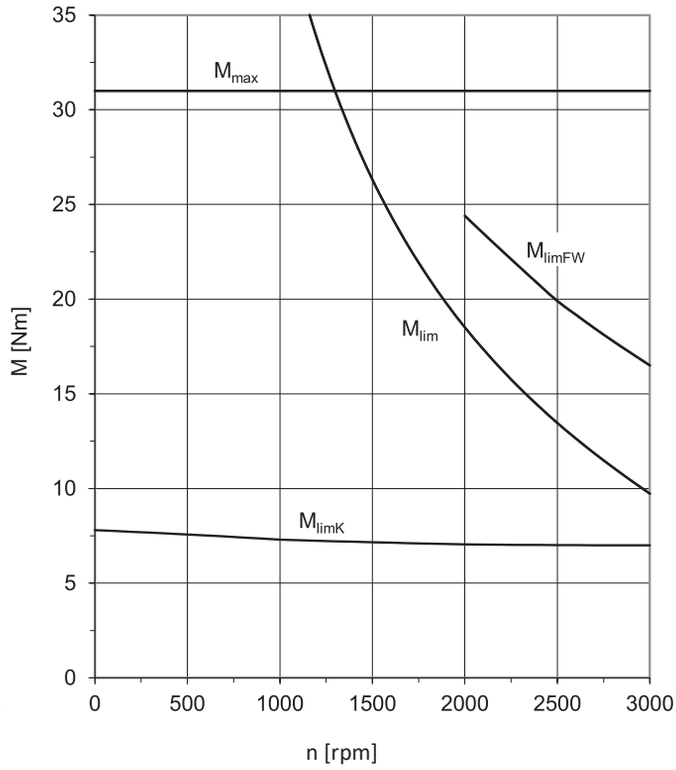

EZHD0513U (n_N=3000 rpm)

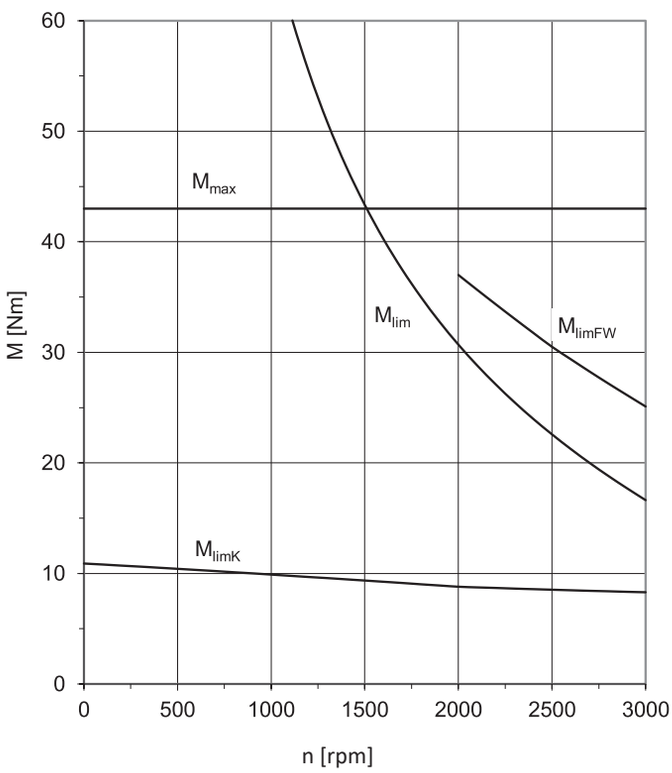

EZHD0515U (n_N=3000 rpm)

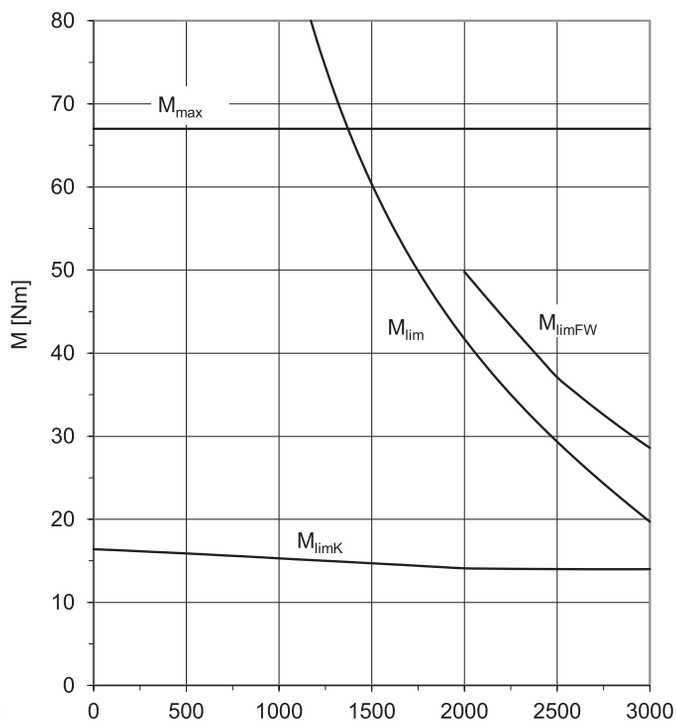

EZHD0711U (n_N=3000 rpm)

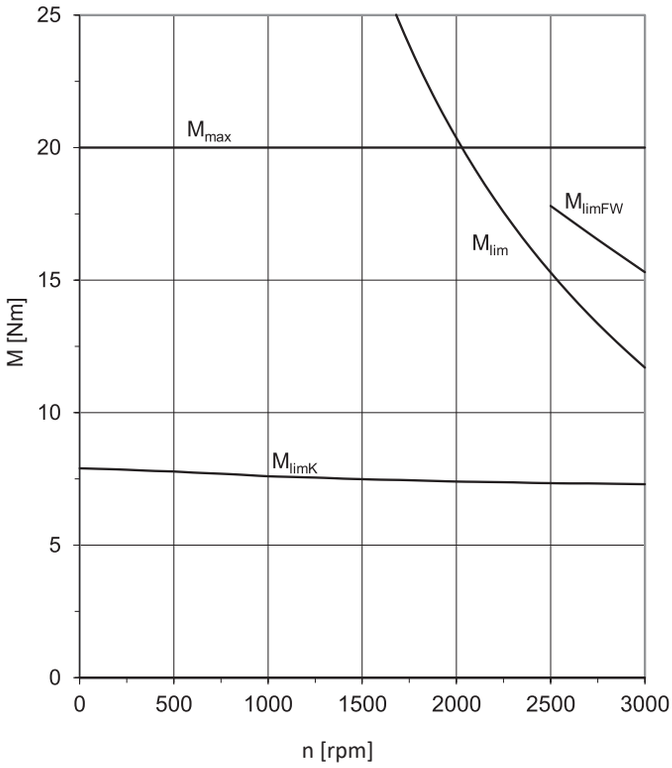

EZHD0712U (n_N=3000 rpm)

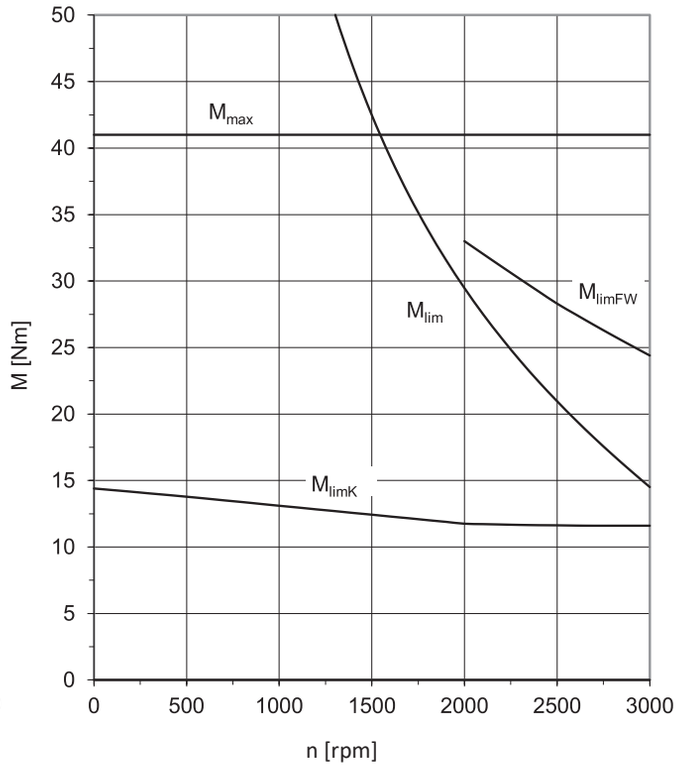

EZHD0713U (n_N=3000 rpm)

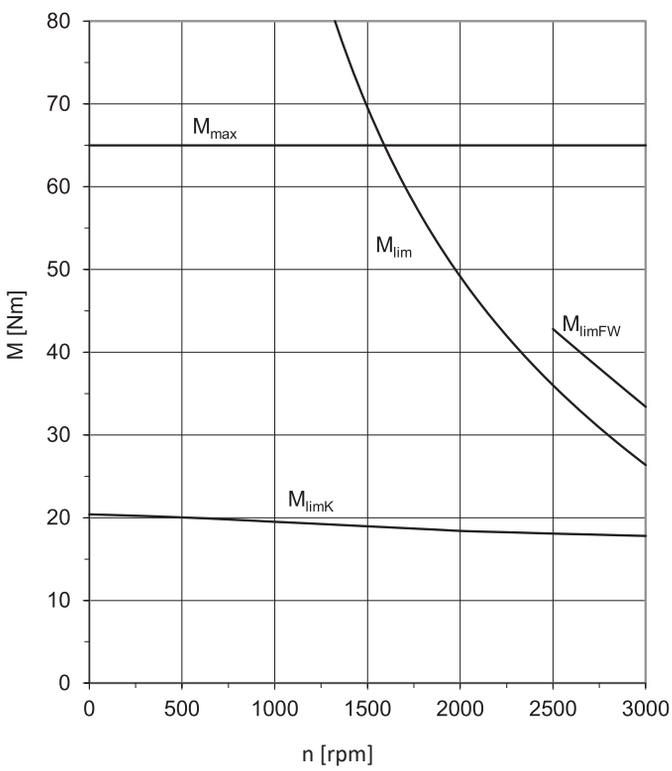

EZHD0715U (n_N=3000 rpm)

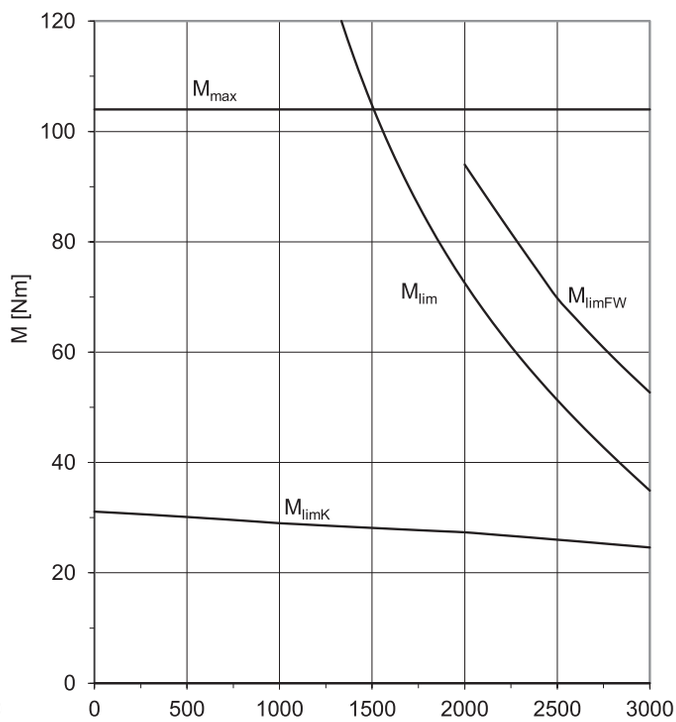

8.4 Dimensional drawings

In this chapter, you can find the dimensions of the motors.

Dimensions can exceed the specifications of ISO 2768-mK due to casting tolerances or accumulation of individual tolerances.

We reserve the right to make dimensional changes due to ongoing technical development.

You can download 3D models of our standard drives at http://configurator.stoeber.de.

8.4.1 EZHD04 motors

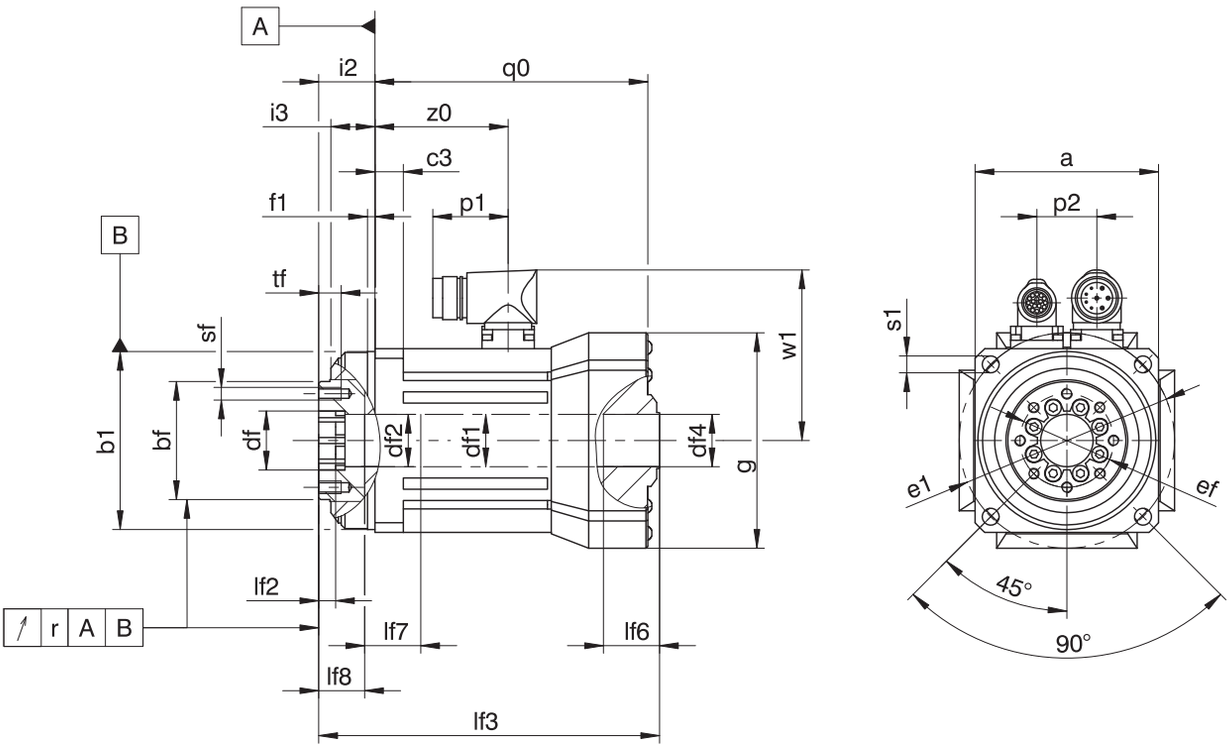

Type	□a	Øb1	Øbf	c3	Ødf	Ødf1	Ødf2	Ødf4	Øe1	Øef	f1	□g	i2	i3	lf2	lf3	lf6	lf7	lf8	p1	p2	q0	r	Øs1	sf	tf	w1	z0
EZHD0411	98	95_{j6}	63_{h7}	15.1	31.5^{H7}	28.4	$28^{+0,1}$	28^{JS10}	115	50	4	115	30±0.4	23.5	9	182	30	30	24.5	40	32	145.8	0.030	9	M6	11	91	71
EZHD0412	98	95_{j6}	63_{h7}	15.1	31.5^{H7}	28.4	$28^{+0,1}$	28^{JS10}	115	50	4	115	30±0.4	23.5	9	207	30	30	24.5	40	32	170.8	0.030	9	M6	11	91	96
EZHD0414	98	95_{j6}	63_{h7}	15.1	31.5^{H7}	28.4	$28^{+0,1}$	28^{JS10}	115	50	4	115	30±0.4	23.5	9	257	30	30	24.5	40	32	220.8	0.030	9	M6	11	91	143

8.4.2 EZHD05 – EZHD07 motors

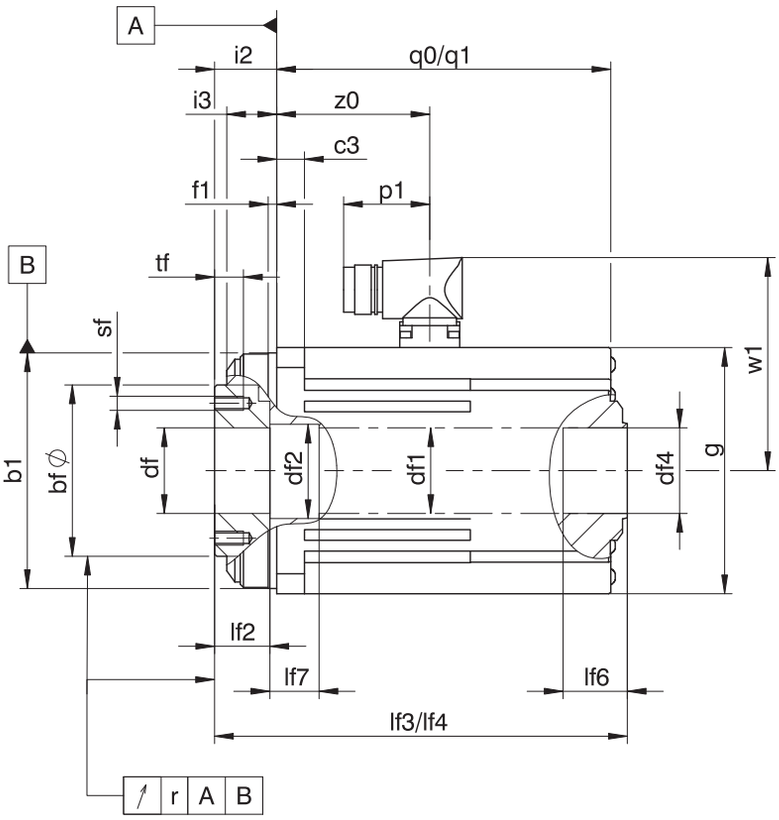

EZHD05

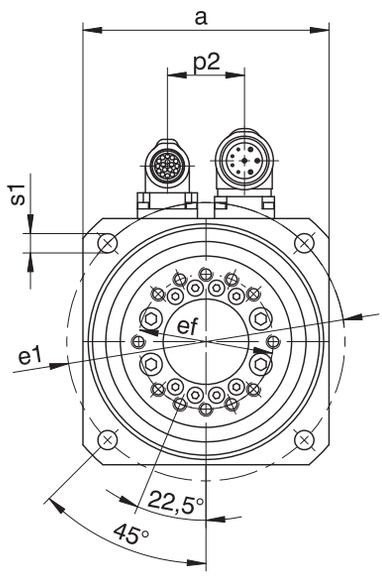

EZHD07

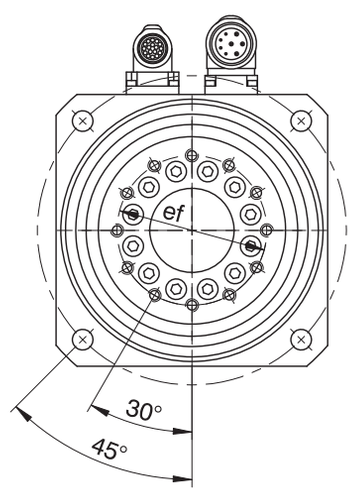

q0, lf3 Applies to motors without holding brake.

q1. lf4 Applies to motors with holding brake.

Type	□a	Øb1	Øbf	c3	Ødf	Ødf1	Ødf2	Ødf4	Øe1	Øef	f1	□g	i2	i3
EZHD0511	115	110_{j6}	80_{h7}	13.0	40.0^{H7}	40.5	$44^{+0,1}$	40^{JS10}	130	63	4	115	29±0.4	23.3
EZHD0512	115	110_{j6}	80_{h7}	13.0	40.0^{H7}	40.5	$44^{+0,1}$	40^{JS10}	130	63	4	115	29±0.4	23.3
EZHD0513	115	110_{j6}	80_{h7}	13.0	40.0^{H7}	40.5	$44^{+0,1}$	40^{JS10}	130	63	4	115	29±0.4	23.3
EZHD0515	115	110_{j6}	80_{h7}	13.0	40.0^{H7}	40.5	$44^{+0,1}$	40^{JS10}	130	63	4	115	29±0.4	23.3
EZHD0711	145	140_{j6}	100_{h7}	14.5	50.0^{H7}	45.5	$50^{+0,1}$	45^{JS10}	165	80	4	145	38±0.4	24.5
EZHD0712	145	140_{j6}	100_{h7}	14.5	50.0^{H7}	45.5	$50^{+0,1}$	45^{JS10}	165	80	4	145	38±0.4	24.5
EZHD0713	145	140_{j6}	100_{h7}	14.5	50.0^{H7}	45.5	$50^{+0,1}$	45^{JS10}	165	80	4	145	38±0.4	24.5
EZHD0715	145	140_{j6}	100_{h7}	14.5	50.0^{H7}	45.5	$50^{+0,1}$	45^{JS10}	165	80	4	145	38±0.4	24.5

Type	lf2	lf3	lf4	lf6	lf7	p1	p2	q0	q1	r	Øs1	sf	tf	w1	z0
EZHD0511	25.8	192.8	248.3	30	23.0	40	36	156.1	211.4	0.030	9	M6	11	100	71.5
EZHD0512	25.8	217.8	273.3	30	23.0	40	36	181.1	236.4	0.030	9	M6	11	100	96.3
EZHD0513	25.8	242.8	298.3	30	23.0	40	36	206.1	261.4	0.030	9	M6	11	100	121.5
EZHD0515	25.8	292.8	348.3	30	23.0	40	36	256.1	311.4	0.030	9	M6	11	100	171.5
EZHD0711	33.5	219.0	278.7	30	40.5	40	42	172.2	232.2	0.030	11	M8	15	115	78.7
EZHD0712	33.5	244.0	303.7	30	40.5	40	42	197.2	257.2	0.030	11	M8	15	115	103.7
EZHD0713	33.5	269.0	328.7	30	40.5	40	42	222.2	282.2	0.030	11	M8	15	115	128.7
EZHD0715	33.5	324.0	383.7	30	40.5	71	42	277.2	337.2	0.030	11	M8	15	134	179.7

8.5 Type designation

Sample code

EZH	D	0	5	1	1	U	F	AD	B1	O	097

Explanation

Code	Designation	Design
EZH	Type	Synchronous servo motor with hollow shaft
D	Drive	Direct drive
0	Stages	Zero-stage (direct drive)
5	Motor size	5 (example)
1	Generation	1
1	Length	1 (example)
U	Cooling	Convection cooling
F	Output	Flange
AD	Drive controller	SD6 (example)
B1	Encoder	EnDat 2.2 EBI 135 EnDat 2.2 (example)
O	Brake	Without holding brake
P		Permanent magnet holding brake[1]
097	Voltage constant K_{EM}	97 V/1000 rpm (example)

Notes

- In Chapter [▸ 8.6.4], you can find information about available encoders.
- In Chapter [▸ 8.6.4.3], you can find information about connecting synchronous servo motors to other drive controllers from STOBER.

8.6 Product description

8.6.1 General features

Feature	Description
Design	IM B5, IM V1, IM V3 in accordance with EN 60034-7
Protection class	IP56
Thermal class	155 (F) in accordance with EN 60034-1 (155 °C, heating $\Delta\vartheta$ = 100 K)
Surface	Matte black as per RAL 9005
Cooling	IC 410 convection cooling
Bearing	Rolling bearing with lifetime lubrication and non-contact sealing
Sealing	Gamma ring (on A and B side)
Vibration intensity	A in accordance with EN 60034-14
Noise level	Limit values in accordance with EN 60034-9

8.6.2 Electrical features

General electrical features of the motor are described in this chapter. Details can be found in the "Selection tables" chapter.

Feature	Description
DC link voltage	DC 540 V (max. 620 V) on STOBER drive controllers
Winding	Three-phase, single-tooth coil design
Circuit	Star, center not led through
Protection class	I (protective grounding) in accordance with EN 61140
Number of pole pairs	7

[1] Not available for EZHD_4.

8.6.3 Ambient conditions

Standard ambient conditions for transport, storage and operation of the motor are described in this chapter. Information about differing ambient conditions can be found in the chapter [▶ 8.7.3].

Feature	Description
Surrounding temperature for transport/storage	−30 °C to +85 °C
Surrounding temperature for operation	−15 °C to +40 °C
Relative humidity	5% to 95%, no condensation
Installation altitude	≤ 1000 m above sea level
Shock load	≤ 50 m/s² (5 g), 6 ms in accordance with EN 60068-2-27

Notes

- STOBER synchronous servo motors are not suitable for potentially explosive atmospheres.
- Secure the power cables close to the motor so that vibrations of the cable do not place impermissible loads on the motor plug connector.
- Note that the braking torques of the holding brake (optional) may be reduced by shock loading.
- At operating temperatures below 0 °C, note that the discs of the holding brake (optional) may ice up.
- Also take into consideration the shock load of the motor due to output units (such as gear units and pumps) which are coupled with the motor.

8.6.4 Encoders

STOBER synchronous servo motors can be designed with different encoder models. The following chapters include information for choosing the optimal encoder for your application.

8.6.4.1 Selection tool for EnDat interface

The following table offers a selection tool for the EnDat interface of absolute encoders.

Feature	EnDat 2.1	EnDat 2.2
Short cycle times	★★☆	★★★
Transfer of additional information along with the position value	–	✓
Expanded power supply range	★★☆	★★★
Key: ★★☆ = good, ★★★ = very good		

8.6.4.2 EnDat encoders

In this chapter, you can find detailed technical data for encoder models that can be selected with EnDat interface.

Encoders with EnDat 2.2 interface

Encoder model	Code	Measuring method	Recordable revolutions	Resolution	Position values per revolution
EnDat 2.2 EBI 135	B1	Inductive	65536	19 bit	524288
EnDat 2.2 ECI 119-G2	C9	Inductive	–	19 bit	524288

Encoders with EnDat 2.1 interface

Encoder model	Code	Measuring method	Recordable revolutions	Resolution	Position values per revolution	Periods per revolution
EnDat 2.1 ECI 119	C4	Inductive	–	19 bit	524288	Sin/Cos 32

Notes

- The encoder code is a part of the type designation of the motor.
- Multiple revolutions of the motor shaft can be recorded only using multi-turn encoders.
- The EnDat 2.2 EBI 135 encoder requires an external buffer battery so that absolute position information is retained after the power supply is turned off (AES option for STOBER drive controllers).

8.6.4.3 Possible combinations with drive controllers

The following table shows the options for combining STOBER drive controllers with selectable encoder models.

Drive controller		SDS 5000	MDS 5000	SDS 5000/ MDS 5000	SD6		SI6	SC6
Drive controller code		AA	AB	AC	AD	AE	**AP**	**AU**
Connection plan ID		442305	442306	442307	442450	442451	**442771**	**443052**
Encoder	**Encoder code**							
EnDat 2.2 EBI 135	B1	✓	✓	–	✓	–	✓	✓
EnDat 2.2 ECI 119-G2	C9	✓	✓	–	✓	–	✓	✓
EnDat 2.1 ECI 119	C4	–	–	✓	–	✓	–	–

Notes

- The drive controller and encoder codes are a part of the type designation of the motor (see the "Type designation" chapter).

8.6.5 Temperature sensor

In this chapter, you can find technical data for the temperature sensors that are installed in STOBER synchronous servo motors for implementing thermal winding protection. To prevent damage to the motor, always monitor the temperature sensor with appropriate devices that will turn off the motor if the maximum permitted winding temperature is exceeded.

Some encoders feature integrated temperature monitoring, the warning and switch-off thresholds of which may overlap with the corresponding values set for the temperature sensor in the drive controller. In some cases, this may result in an instance where an encoder with internal temperature monitoring forces the motor to shut down, even before the motor has reached its nominal data.

You can find information about the electrical connection of the temperature sensor in the "Connection method" chapter.

8.6.5.1 PTC thermistor

The PTC thermistor is installed as a standard temperature sensor in STOBER synchronous servo motors.

The PTC thermistor is a triple thermistor in accordance with DIN 44082 that can be used for monitoring the temperature of each winding phase. The resistance values in the following table and curve refer to a single thermistor in accordance with DIN 44081. These values must be multiplied by 3 for a triple thermistor in accordance with DIN 44082.

Feature	Description
Nominal response temperature ϑ_{NAT}	145 °C ± 5 K
Resistance R −20 °C up to ϑ_{NAT} − 20 K	≤ 250 Ω
Resistance R with ϑ_{NAT} − 5 K	≤ 550 Ω
Resistance R with ϑ_{NAT} + 5 K	≥ 1330 Ω
Resistance R with ϑ_{NAT} + 15 K	≥ 4000 Ω
Operating voltage	≤ DC 7.5 V
Thermal response time	< 5 s
Thermal class	155 (F) in accordance with EN 60034-1 (155 °C, heating $\Delta\vartheta$ = 100 K)

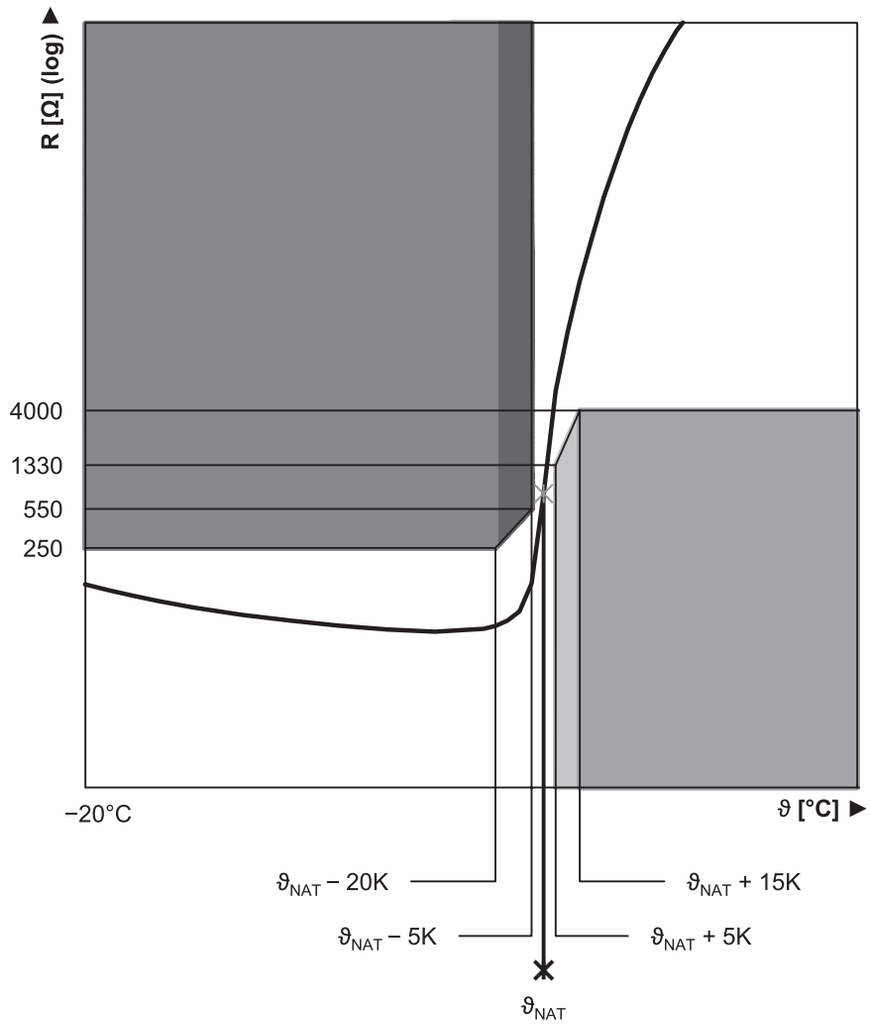

Fig. 2: PTC thermistor curve (single thermistor)

8.6.5.2 Pt1000 temperature sensor

STOBER synchronous servo motors are available in versions with a Pt1000 temperature sensor. The Pt1000 is a temperature-dependent resistor that has a resistance curve with a linear relationship with temperature. As a result, the Pt1000 allows for measurements of the winding temperature. These measurements are limited to one phase of the motor winding, however. In order to adequately protect the motor from exceeding the maximum permitted winding temperature, use a i^2t model in the drive controller to monitor the winding temperature.

Avoid exceeding the specified measurement current so that the measured values are not falsified due to self-heating of the temperature sensor.

Feature	Description
Measurement current (constant)	2 mA
Resistance R for ϑ = 0 °C	1000 Ω
Resistance R for ϑ = 80 °C	1300 Ω
Resistance R for ϑ = 150 °C	1570 Ω

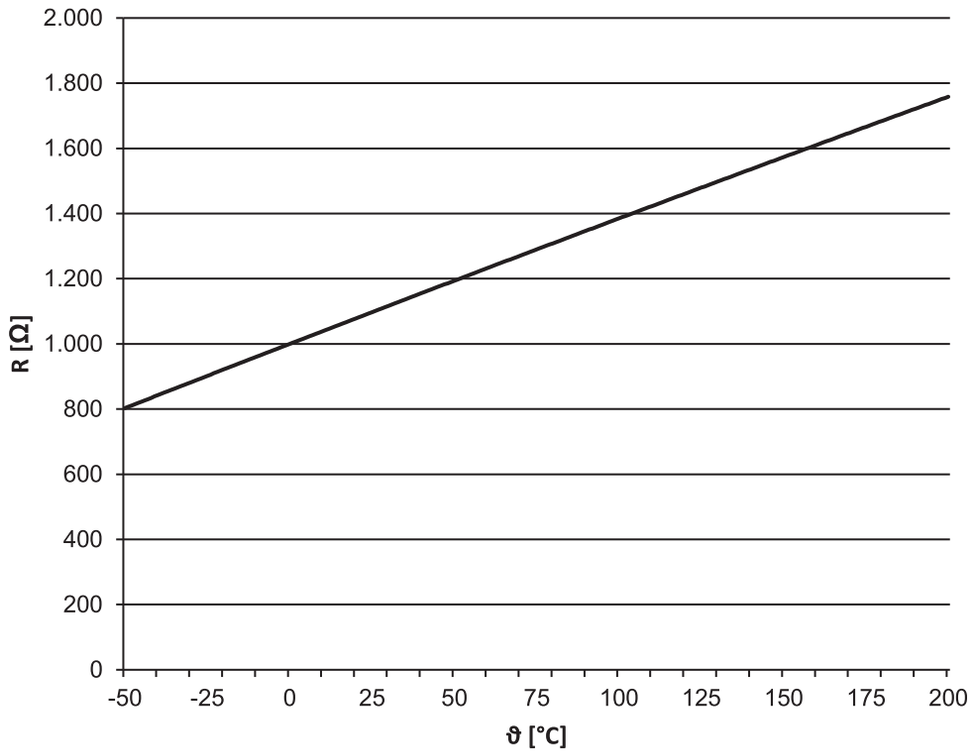

Fig. 3: Pt1000 temperature sensor characteristic curve

8.6.6 Cooling

An EZHD motor is cooled by convection cooling (IC 410 in accordance with EN 60034-6). The air flowing around the motor is heated by the radiated motor heat and rises.

8.6.7 Holding brake

STOBER synchronous servo motors can be equipped with a backlash-free holding brake using permanent magnets in order to secure the motor shaft when at a standstill. The holding brake engages automatically if the voltage drops.

The holding brake is designed for a high number of operations (B_{10} = 10 million operations, B_{10d} = 20 million operations).

Nominal voltage of permanent magnet holding brake: DC 24 V ± 5%, smoothed.

Observe the following during project configuration:

- The holding brake is designed to keep the motor shaft from moving. Activate braking processes during operation using the corresponding electrical functions of the drive controller. In exceptional circumstances, the holding brake can be used for braking from full speed (following a power failure or when setting up the machine). The maximum permitted work done by friction $W_{B,Rmax/h}$ may not be exceeded.
- Note that the braking torque M_{Bdyn} may initially be up to 50% less when braking from full speed. As a result, the braking effect has a delayed action and braking distances become longer.
- Regularly perform a brake test to ensure the functional safety of the brakes. Details can be found in the documentation of the motor and the drive controller.
- Connect a varistor of type S14 K35 (or comparable) in parallel to the brake coil to protect your machine from switching surges. (Not necessary for connecting the holding brake to STOBER drive controllers of the 5th and 6th generation with a BRS/BRM brake module).
- The holding brake of the motor does not offer adequate safety for persons in the hazardous area of gravity-loaded vertical axes. Therefore take additional measures to minimize risk, e.g. by providing a mechanical substructure for maintenance work.
- Take into consideration voltage losses in the connection cables that connect the voltage source to the holding brake connections.
- The holding torque of the brake can be reduced by shock loading. Information about shock loading can be found in the "Ambient conditions" chapter.

- At operating temperatures from −15 °C to 0 °C, a cold holding brake in the released state may cause operating noises. As the temperature of the holding brake increases, these noises decrease such that operating noises are not heard when using holding brake at operating temperature in the released state.

Calculation of work done by friction per braking process

$$W_{B,R/B} = \frac{J_{tot} \cdot n^2}{182.4} \cdot \frac{M_{Bdyn}}{M_{Bdyn} \pm M_L}, \; M_{Bdyn} > M_L$$

The sign of M_L is positive if the movement runs vertically upwards or horizontally and it is negative if the movement runs vertically down.

Calculation of the stop time

$$t_{dec} = 2.66 \cdot t_{1B} + \frac{n \cdot J_{tot}}{9.55 \cdot M_{Bdyn}}$$

Switching behavior

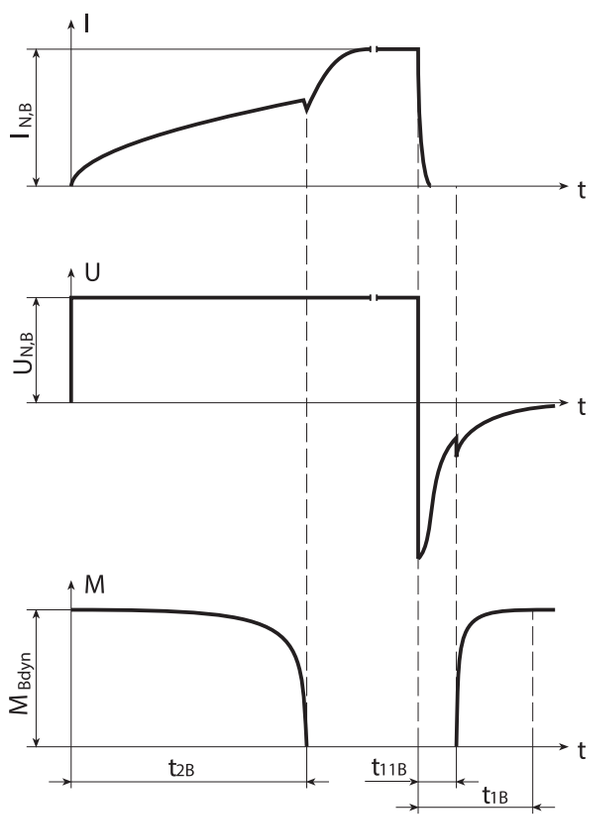

Fig. 4: Holding brake – Switching behavior

Technical data

Type	M_{Bstat} [Nm]	M_{Bdyn} [Nm]	$I_{N,B}$ [A]	$W_{B,Rmax/h}$ [kJ/h]	N_{Bstop}	J_{Bstop} [kgcm²]	$W_{B,Rlim}$ [kJ]	t_{2B} [ms]	t_{11B} [ms]	t_{1B} [ms]	$x_{B,N}$ [mm]	ΔJ_B [kgcm²]	Δm_B [kg]
EZHD0511	18	15	1.1	11.0	2050	54.3	550	55	3.0	30	0.3	4.840	2.30
EZHD0512	18	15	1.1	11.0	1850	59.8	550	55	3.0	30	0.3	4.840	2.30
EZHD0513	18	15	1.1	11.0	1700	65.5	550	55	3.0	30	0.3	4.840	2.30
EZHD0515	18	15	1.1	11.0	1450	76.9	550	55	3.0	30	0.3	4.840	2.30
EZHD0711	28	25	1.1	25.0	1850	152	1400	120	4.0	40	0.4	12.280	3.77
EZHD0712	28	25	1.1	25.0	1650	170	1400	120	4.0	40	0.4	12.280	3.77
EZHD0713	28	25	1.1	25.0	1500	187	1400	120	4.0	40	0.4	12.280	3.77
EZHD0715	28	25	1.1	25.0	1250	224	1400	120	4.0	40	0.4	12.280	3.77

8.6.8 Connection method

The following chapters describe the connection technology of STOBER synchronous servo motors in the standard version on STOBER drive controllers. You can find further information relating to the drive controller type that was specified in your order in the connection plan that is delivered with every synchronous servo motor.

8.6.8.1 Connection of the motor housing to the grounding conductor system

Connect the motor housing to the grounding conductor system of the machine in order to prevent personal injury and faulty triggering of residual current protective devices.

All attachment parts required for the connection of the grounding conductor to the motor housing are delivered with the motor. The grounding screw of the motor is identified with the symbol ⏚ in accordance with IEC 60417-DB. The cross-section of the grounding conductor has to be at least as large as the cross-section of the lines in the power connection.

8.6.8.2 Plug connectors

STOBER synchronous servo motors are equipped with twistable quick-lock plug connectors in the standard version. Details can be found in this chapter.

The figures represent the position of the plug connectors upon delivery.

Turning ranges of plug connectors

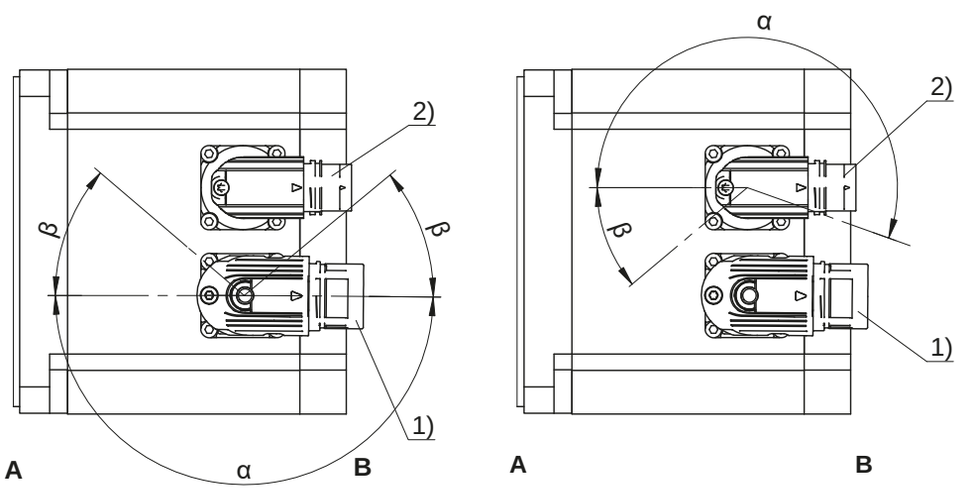

1	Power plug connector	2	Encoder plug connector
A	Attachment or output side of the motor	B	Rear side of the motor

Power plug connector features

Motor type	Size	Connection	Turning range	
			α	β
EZHD_4, EZHD_5, EZHD_711 – EZHD_713	con.23	Quick lock	180°	40°
EZHD_715	con.40	Quick lock	180°	40°

Encoder plug connector features

Motor type	Size	Connection	Turning range	
			α	β
EZHD	con.17	Quick lock	195°	35°

Notes

- The number after "con." indicates the approximate external thread diameter of the plug connector in mm (for example, con.23 designates a plug connector with an external thread diameter of about 23 mm).
- In turning range β, the power or encoder plug connectors can be turned only if doing so does not cause them to collide.

8.6.8.3 Connection assignment of the power plug connector

The size and connection plan of the power plug connector depend on the size of the motor. The colors of the connecting wires inside the motor are specified in accordance with IEC 60757.

Plug connector size con.23

Connection diagram	Pin	Connection	Color
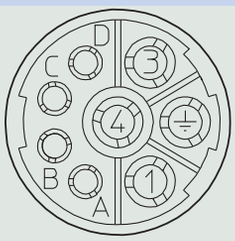	1	U phase	BK
	3	V phase	BU
	4	W phase	RD
	A	Brake +	RD
	B	Brake –	BK
	C	Temperature sensor +	
	D	Temperature sensor –	
	⏚	Grounding conductor	GNYE

Plug connector size con.40 (1.5)

Connection diagram	Pin	Connection	Color
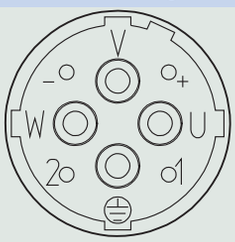	U	U phase	BK
	V	V phase	BU
	W	W phase	RD
	+	Brake +	RD
	–	Brake –	BK
	1	Temperature sensor +	
	2	Temperature sensor –	
	⏚	Grounding conductor	GNYE

8.6.8.4 Connection assignment of the encoder plug connector

The size and connection assignment of the encoder plug connectors depend on the model of encoder installed and the size of the motor. The colors of the connecting wires inside the motor are specified in accordance with IEC 60757.

EnDat 2.1/2.2 digital encoders, plug connector size con.17

Connection diagram	Pin	Connection	Color
	1	Clock +	VT
	2	Up sense	BNGN
	3		
	4		
	5	Data –	PK
	6	Data +	GY
	7		
	8	Clock –	YE
	9		
	10	0 V GND	WHGN
	11		
	12	Up +	BNGN
	Pin 2 is connected to pin 12 in the plug connector		

EnDat 2.2 digital encoder with battery buffering, plug connector size con.17

Connection diagram	Pin	Connection	Color
	1	Clock +	VT
	2	UBatt +	BU
	3	UBatt –	WH
	4		
	5	Data –	PK
	6	Data +	GY
	7		
	8	Clock –	YE
	9		
	10	0 V GND	WHGN
	11		
	12	Up +	BNGN
	UBatt+ = DC 3.6 V for encoder model EBI in combination with the AES option of STOBER drive controllers		

EnDat 2.1 encoder with sin/cos incremental signals, plug connector size con.17

Connection diagram	Pin	Connection	Color
	1	Up sense	BU
	2		
	3		
	4	0 V sense	WH
	5		
	6		
	7	Up +	BNGN
	8	Clock +	VT
	9	Clock –	YE
	10	0 V GND	WHGN
	11		
	12	B + (Sin +)	BUBK
	13	B – (Sin –)	RDBK
	14	Data +	GY
	15	A + (Cos +)	GNBK
	16	A – (Cos –)	YEBK
	17	Data –	PK

8.7 Project configuration

Project your drives using our SERVOsoft designing software. Download SERVOsoft for free at https://www.stoeber.de/en/ServoSoft.

Observe the limit conditions in this chapter to ensure a safe design for your drives.

An explanation of the formula symbols can be found in Chapter Symbols in formulas.

The formula symbols for values actually present in the application are marked with *.

8.7.1 Calculation of the operating point

In this chapter, you can find information needed to calculate the operating point.

Check the following conditions for operating points other than the nominal point M_N specified in the selection tables:

$n_{m*} \leq n_N$

$M_{eff*} \leq M_{limK}$

$M_{max*} < M_{max}$

The values for M_N, n_N, M_{max} can be found in the selection tables.

The values for M_{limK} can be found in the torque/speed characteristic curves.

Example of cyclic operation

The following calculations refer to a representation of the power delivered at the motor shaft based on the following example:

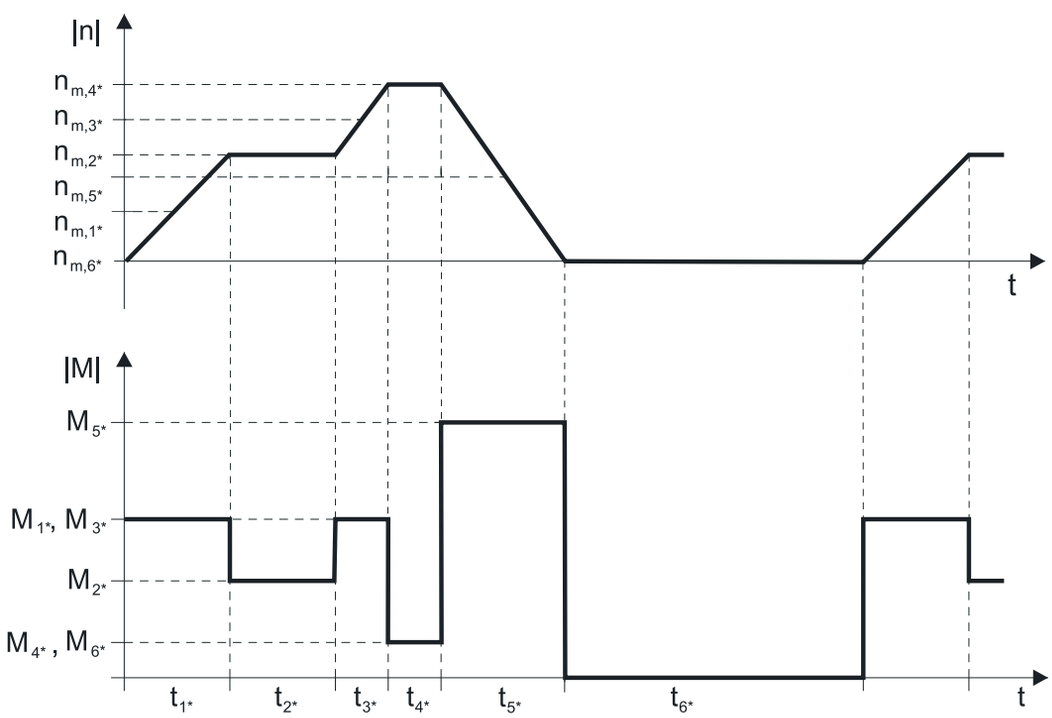

Calculation of the actual average input speed

$$n_{m*} = \frac{|n_{m,1*}| \cdot t_{1*} + \ldots + |n_{m,n*}| \cdot t_{n*}}{t_{1*} + \ldots + t_{n*}}$$

If $t_{1*} + \ldots + t_{5*} \geq 6$ min, determine n_{m*} without the rest phase t_{6*}.

Calculation of the actual effective torque

$$M_{eff*} = \sqrt{\frac{t_{1*} \cdot M_{1*}^2 + \ldots + t_{n*} \cdot M_{n*}^2}{t_{1*} + \ldots + t_{n*}}}$$

8.7.2 Permitted shaft loads

This chapter contains information about the maximum permitted shaft loads of the output shaft of the motor.

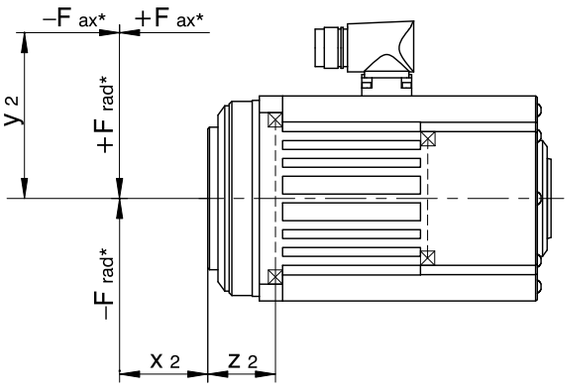

Type	z_2 [mm]	F_{ax300} [N]	F_{rad300} [N]	M_{k300} [Nm]	C_{2k} [Nm/ arcmin]
EZHD0411	29.5	1600	3400	102	60
EZHD0412	29.5	1600	3700	109	66
EZHD0414	29.5	1600	4000	118	44
EZHD0511	30.0	4500	3400	102	111
EZHD0512	30.0	4500	3600	108	126
EZHD0513	30.0	4500	3750	113	130
EZHD0515	30.0	4500	4000	120	122
EZHD0711	41.5	7000	5000	208	212
EZHD0712	41.5	7000	5300	220	256
EZHD0713	41.5	7000	5500	229	287
EZHD0715	41.5	7000	5800	241	315

The values for permitted shaft loads specified in the table apply:

- For shaft dimensions in accordance with the catalog
- Output speed $n_{m*} \leq 300$ rpm ($F^{ax} = F_{ax300}$; $F_{rad} = F_{rad300}$; $M_k = M_{k300}$)
- Only if pilots are used (housing, flange hollow shaft)

The following applies to output speeds $n_{m*} > 300$ rpm:

$$F_{ax} = \frac{F_{ax300}}{\sqrt[3]{\frac{n_{m*}}{300\ \text{rpm}}}} \qquad F_{rad} = \frac{F_{rad300}}{\sqrt[3]{\frac{n_{m*}}{300\ \text{rpm}}}} \qquad M_k = \frac{M_{k300}}{\sqrt[3]{\frac{n_{m*}}{300\ \text{rpm}}}}$$

The following applies to other force application points:

$$M_{k*} = \frac{F_{ax*} \cdot y_2 + F_{rad*} \cdot (x_2 + z_2)}{1000} \leq M_{k300}$$

$$F_{rad*} \leq F_{rad300}$$

$$F_{ax*} \leq F_{ax300}$$

For applications with multiple axial and/or radial forces, you must add the forces as vectors.

8.7.3 Derating

If you use the motor under ambient conditions that differ from the standard ambient conditions, the nominal torque M_N of the motor is reduced. In this chapter, you can find information for calculating the reduced nominal torque.

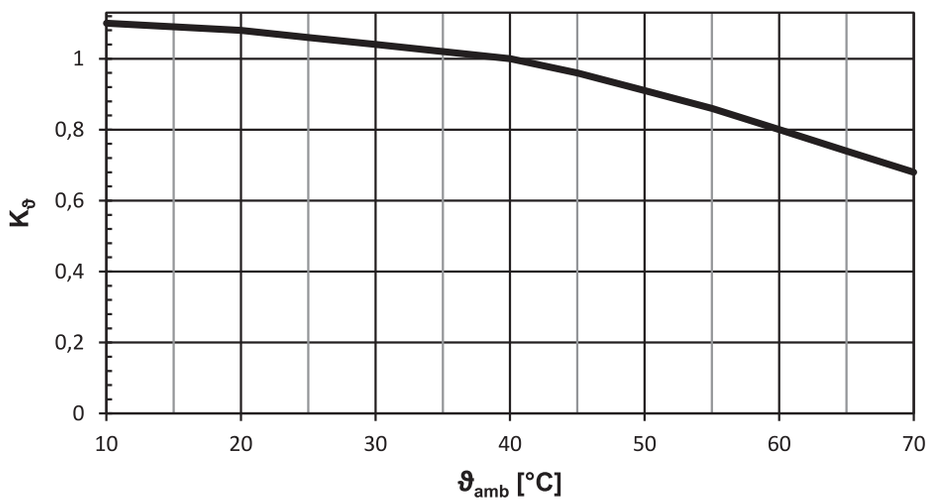

Fig. 5: Derating depending on the surrounding temperature

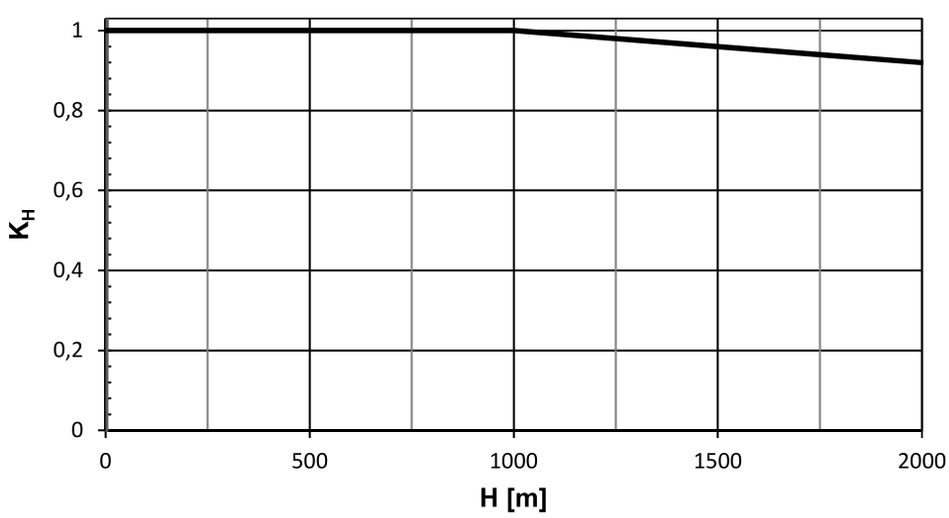

Fig. 6: Derating depending on the installation height

Calculation

If surrounding temperature ϑ_{amb} > 40 °C:

$M_{Nred} = M_N \cdot K_\vartheta$

If installation altitude H > 1000 m above sea level:

$M_{Nred} = M_N \cdot K_H$

If the surrounding temperature ϑ_{amb} > 40 °C and installation altitude H > 1000 m above sea level:

$M_{Nred} = M_N \cdot K_H \cdot K_\vartheta$

8.8 Further information

8.8.1 Directives and standards

STOBER synchronous servo motors meet the requirements of the following directives and standards:

- (Low Voltage) Directive 2014/35/EU
- EN 60034-1:2010 + Cor.:2010
- EN 60034-5:2001 + A1:2007
- EN 60034-6:1993

8.8.2 Identifiers and test symbols

STOBER synchronous servo motors have the following identifiers and test symbols:

CE mark: The product meets the requirements of EU directives.

cURus test symbol "Servo and Stepper Motors – Component"; registered under UL number E488992 with Underwriters Laboratories USA (optional).

8.8.3 Additional documentation

Additional documentation related to the product can be found at
http://www.stoeber.de/en/downloads/

Enter the ID of the documentation in the Search... field.

Documentation	ID
Operating manual for EZ synchronous servo motors	443032_en

9 EZM synchronous servo motors for screw drives

Table of contents

9.1 Overview ... 240

9.2 Selection tables ... 241

9.2.1 Mass moments of inertia and weights ... 241

9.3 Torque/speed curves ... 242

9.4 Dimensional drawings ... 245

9.4.1 EZM motors ... 245

9.5 Type designation ... 246

9.6 Product description ... 246

9.6.1 General features ... 246

9.6.2 Electrical features ... 247

9.6.3 Ambient conditions ... 247

9.6.4 Threaded nut ... 247

9.6.5 Threaded spindle ... 249

9.6.6 Encoders ... 249

9.6.7 Temperature sensor ... 250

9.6.8 Cooling ... 252

9.6.9 Holding brake ... 253

9.6.10 Connection method ... 254

9.7 Project configuration ... 257

9.7.1 Design of the screw drive ... 257

9.7.2 Calculation of the operating point ... 258

9.7.3 Calculation of the bearing service life ... 260

9.8 Further information ... 261

9.8.1 Directives and standards ... 261

9.8.2 Identifiers and test symbols ... 261

9.8.3 Additional documentation ... 261

9

Synchronous servo motors for screw drives

EZM

9.1 Overview

Synchronous servo motor for screw drives (direct drive for threaded nut)

Features

Designed for driving the ball-threaded nut of ball screws in accordance with DIN 69051-2.	✓
Axial angular contact ball bearing acting on two sides for direct absorption of the threaded spindle forces	✓
Super compact due to tooth-coil winding method with the highest possible copper fill factor	✓
Backlash-free holding brake (optional)	✓
Convection cooling	✓
Inductive EnDat absolute encoders	✓
Elimination of referencing with multi-turn absolute encoders (optional)	✓
Electronic nameplate for fast and reliable commissioning	✓
Rotating plug connectors with quick lock	✓

Axial forces

F_{ax}	751 – 21375 N

9.2 Selection tables

The technical data specified in the selection tables applies to:

- Installation altitudes up to 1000 m above sea level
- Surrounding temperatures from −15 °C to +40 °C
- Operation on a STOBER drive controller
- DC link voltage U_{ZK} = DC 540 V
- Coating: RAL 9005 Jet black, matte

In addition, the technical data applies to an uninsulated design with the following thermal mounting conditions:

Type	Dimensions of steel mounting flange (thickness x width x height)	Convection surface area Steel mounting flange
EZM5	23 x 210 x 275 mm	0.16 m^2
EZM7	28 x 300 x 400 mm	0.3 m^2

Formula symbols

An explanation of the formula symbols can be found in Chapter Symbols in formulas.

Observe the additional information on the following formula symbols:

- I_0 = RMS value of the line-to-line current when stall torque M_0 is generated (tolerance ±5%).
- I_{max} = RMS value of the short-term maximum permitted line-to-line current when maximum torque M_{max} is generated (tolerance ±5%). Exceeding I_{max} may lead to irreversible damage (demagnetization) of the rotor.
- I_N = RMS value of the line-to-line current when nominal torque M_N is generated at the nominal point (tolerance ±5%).
- M_0 = Torque that a motor is continuously able to deliver at a speed of 10 rpm (tolerance ±5%). At a speed of 0 rpm, a minor continuous torque has to be taken into account. Contact your STOBER customer advisor for such an application.

Type	K_{EM} [V/1000 rpm]	n_N [rpm]	M_N [Nm]	I_N [A]	$K_{M,N}$ [Nm/A]	P_N [kW]	M_0 [Nm]	I_0 [A]	K_{M0} [Nm/A]	M_R [Nm]	M_{max} [Nm]	I_{max} [A]	R_{U-V} [Ω]	L_{U-V} [mH]	T_{el} [ms]
EZM511U	97	3000	3.65	3.55	1.03	1.2	4.25	4.00	1.19	0.49	16.0	22.0	3.80	23.50	6.18
EZM512U	121	3000	6.60	5.20	1.27	2.1	7.55	5.75	1.40	0.49	31.0	33.0	2.32	16.80	7.24
EZM513U	119	3000	8.80	6.55	1.34	2.8	10.6	7.60	1.46	0.49	43.0	41.0	1.25	10.00	8.00
EZM711U	95	3000	6.35	6.60	0.96	2.0	7.30	7.40	1.07	0.65	20.0	25.0	1.30	12.83	9.87
EZM712U	133	3000	10.6	7.50	1.41	3.3	13.0	8.90	1.53	0.65	41.0	36.0	1.00	11.73	11.73
EZM713U	122	3000	14.7	10.4	1.41	4.6	18.9	13.0	1.50	0.65	65.0	62.0	0.52	6.80	13.08

9.2.1 Mass moments of inertia and weights

	df [mm]	ef [mm]	ef2 [mm]	J [kgcm²]	m [kg]
EZM511	40	51	65	20.3	9.9
EZM512	40	51	65	23.6	11.5
EZM513	40	51	65	26.8	13.1
EZM711	50	65	78	53.7	17.4
EZM711	56	71	78	60.3	17.6
EZM712	50	65	78	63.1	19.9
EZM712	56	71	78	69.7	20.1
EZM713	50	65	78	72.4	22.5
EZM713	56	71	78	79.0	22.7

9.3 Torque/speed curves

Torque/speed curves depend on the nominal speed and/or winding design of the motor and the DC link voltage of the drive controller that is used. The following torque/speed curves apply to the DC link voltage DC 540 V.

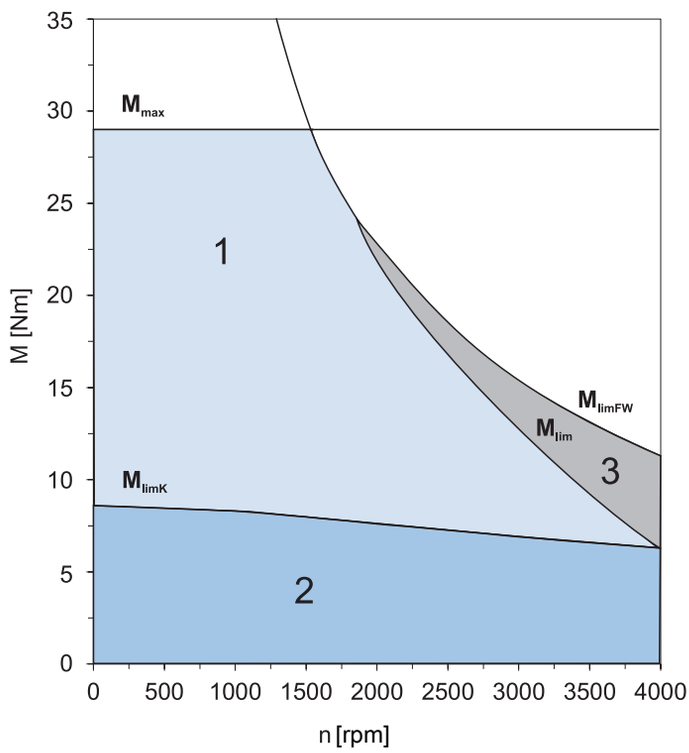

Fig. 1: Explanation of a torque/speed curve

1	Torque range for brief operation (ED_{10} < 100%) with Δϑ = 100 K	2	Torque range for continuous operation with constant load (S1 mode, ED_{10} = 100%) with Δϑ = 100 K
3	Field weakening range (can be used only with operation on STOBER drive controllers)		

EZM511 (n_N=3000 rpm)

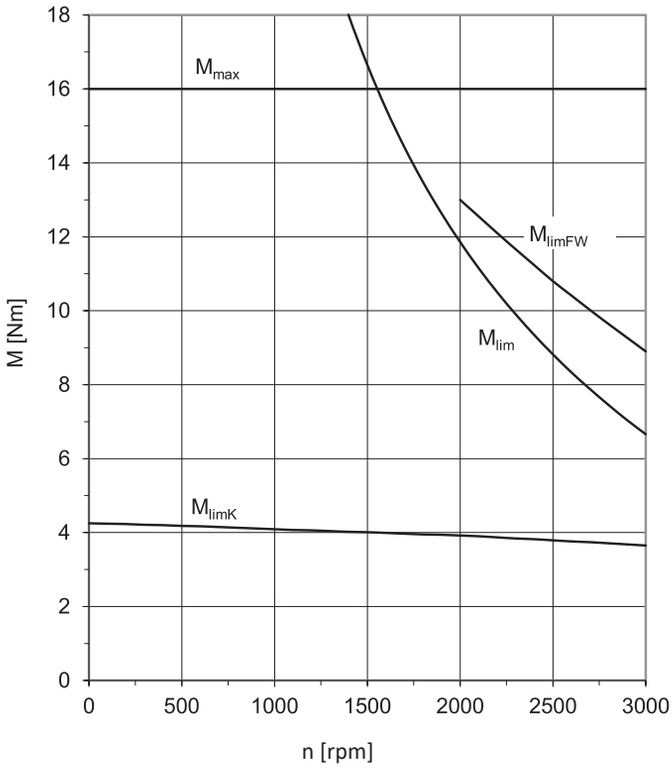

EZM512 (n_N=3000 rpm)

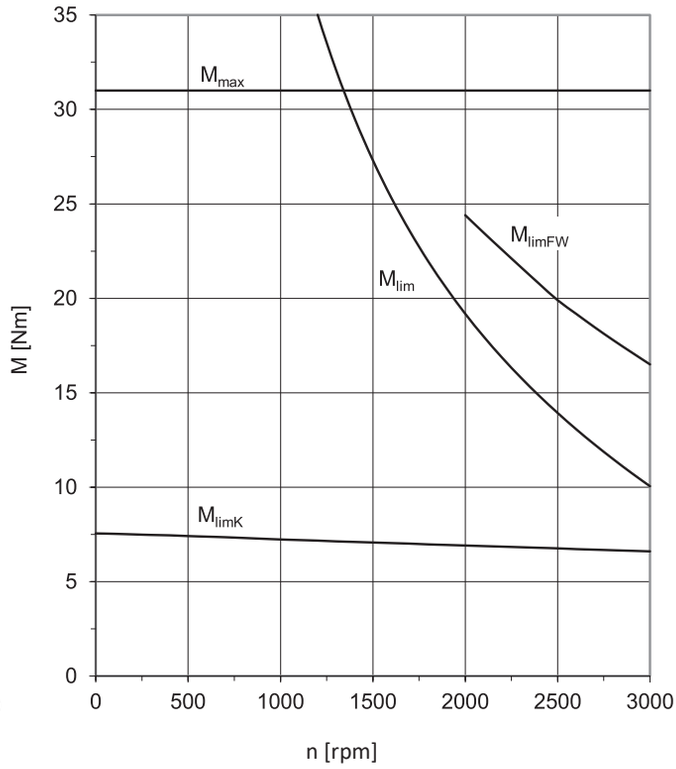

EZM513 (n_N=3000 rpm)

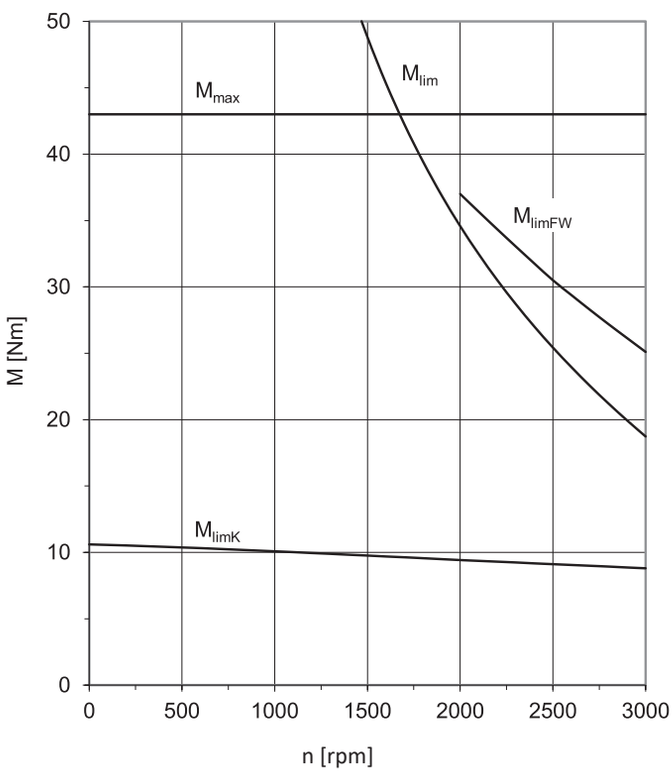

EZM711 (n_N=3000 rpm)

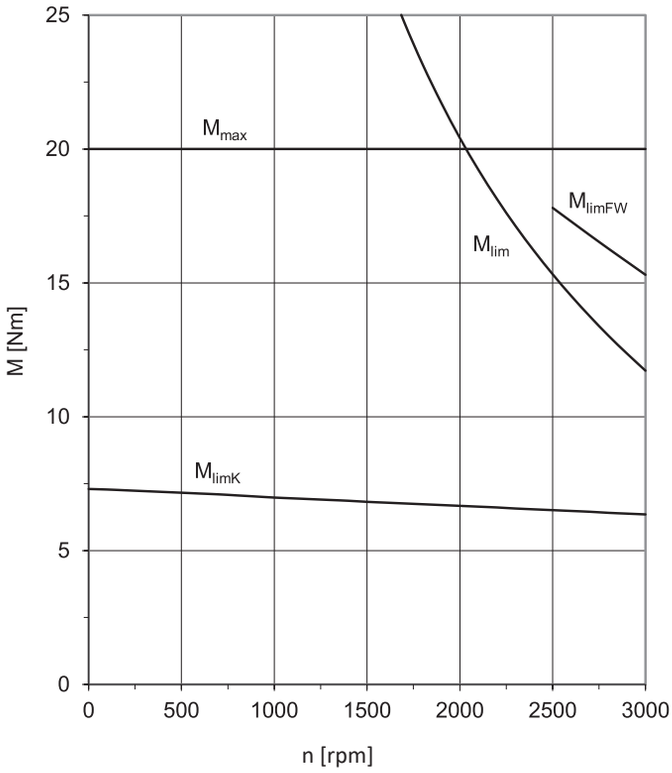

EZM712 (n_N=3000 rpm)

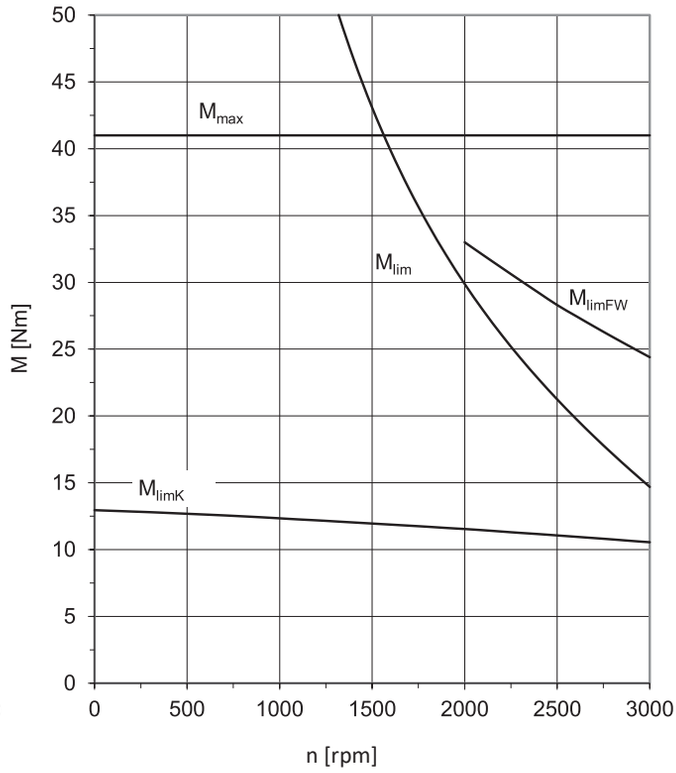

EZM713 (n_N=3000 rpm)

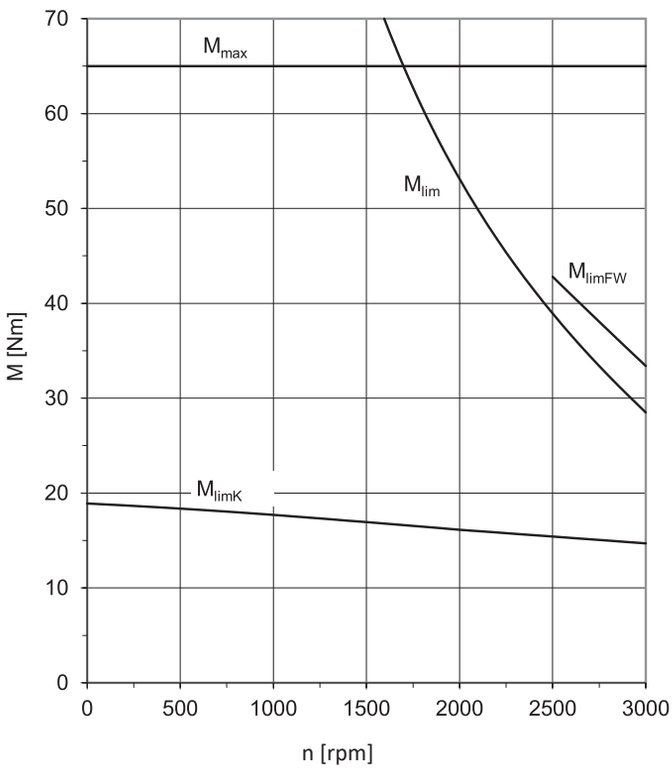

9.4 Dimensional drawings

In this chapter, you can find the dimensions of the motors.

Dimensions can exceed the specifications of ISO 2768-mK due to casting tolerances or accumulation of individual tolerances.

We reserve the right to make dimensional changes due to ongoing technical development.

You can download 3D models of our standard drives at http://configurator.stoeber.de.

9.4.1 EZM motors

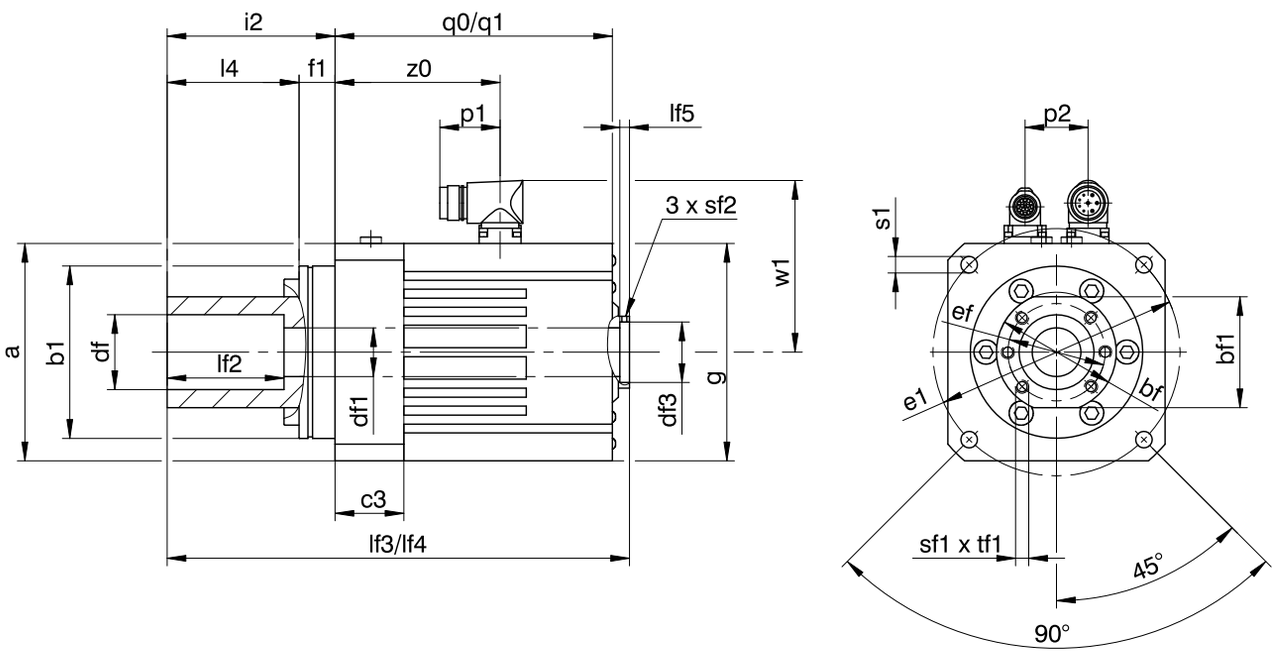

q0, lf3 Applies to motors without holding brake.

q1, lf4 Applies to motors with holding brake.

Type	□a	Øb1	Øbf	bf1	c3	Ødf	Ødf1	Ødf3	Øe1	Øef	f1	□g	i2	l4	lf2	lf3	lf4	lf5	p1	p2	q0	q1	Øs1	sf1	sf2	tf1	w1	z0
EZM511U	115	$90_{-0,01}$	62	59	37	40^{JS6}	25.5	32.3	130	51	24	115	98	74	66	279.0	333.0	4.4	40	36	170.1	225.4	9	M6	M3	12	100	95.5
EZM512U	115	$90_{-0,01}$	62	59	37	40^{JS6}	25.5	32.3	130	51	24	115	98	74	66	304.0	358.3	4.4	40	36	195.1	250.4	9	M6	M3	12	100	120.5
EZM513U	115	$90_{-0,01}$	62	59	37	40^{JS6}	25.5	32.3	130	51	24	115	98	74	66	329.0	383.3	4.4	40	36	220.1	275.4	9	M6	M3	12	100	145.5
EZM711U	145	$115_{-0,01}$	80	74	46	50^{JS6}	32.5	40.3	165	65	24	145	112	88	79	308.6	368.6	5.2	40	42	185.2	245.2	11	M8	M4	14	115	110.2
EZM712U	145	$115_{-0,01}$	80	74	46	50^{JS6}	32.5	40.3	165	65	24	145	112	88	79	333.6	393.6	5.2	40	42	210.2	270.2	11	M8	M4	14	115	135.2
EZM713U	145	$115_{-0,01}$	80	74	46	50^{JS6}	32.5	40.3	165	65	24	145	112	88	79	358.6	418.6	5.2	40	42	235.2	295.2	11	M8	M4	14	115	160.2
EZM711U	145	$115_{-0,01}$	86	80	46	56^{JS6}	32.5	40.3	165	71	24	145	112	88	79	308.6	368.6	5.2	40	42	185.2	245.2	11	M8	M4	14	115	110.2
EZM712U	145	$115_{-0,01}$	86	80	46	56^{JS6}	32.5	40.3	165	71	24	145	112	88	79	333.6	393.6	5.2	40	42	210.2	270.2	11	M8	M4	14	115	135.2
EZM713U	145	$115_{-0,01}$	86	80	46	56^{JS6}	32.5	40.3	165	71	24	145	112	88	79	358.6	418.6	5.2	40	42	235.2	295.2	11	M8	M4	14	115	160.2

9.5 Type designation

Sample code

EZM	5	1	1	U	S	AD	B1	O	097

Explanation

Code	Designation	Design
EZM	Type	Synchronous servo motor for screw drives
5	Motor size	5 (example)
1	Generation	1
1	Length	1 (example)
U	Cooling	Convection cooling
S	Design	Standard
AD	Drive controller	SD6 (example)
B1	Encoder	EnDat 2.2 EBI 135 EnDat 2.2 (example)
O	Brake	Without holding brake
P		Permanent magnet holding brake
097	Voltage constant K_{EM}	97 V/1000 rpm (example)

Notes

- In Chapter [▸ 9.6.6], you can find information about available encoders.
- In Chapter [▸ 9.6.6.3], you can find information about connecting synchronous servo motors to other drive controllers from STOBER.

9.6 Product description

9.6.1 General features

Feature	EZM5	EZM7
Maximum threaded spindle diameter ∅dkg [mm]	25.00	32.00
Pitch of threaded spindle P_{st}	5 – 25	5 – 32
Pilot ∅Dkg [mm]	40	50/56
Bolt circle ∅ekg [mm]	51	65/71
Nominal speed n_N [rpm]	3000	3000
Bearing type[1]	INA ZKLF 3590-2Z[2]	INA ZKLF 50115-2Z[3]
Maximum bearing speed n_{la} [rpm]	3800	3000
Axial bearing load rating, dynamic C_{dyn} [N]	41000	46500
Axial rigidity C_{ax} [N/µm]	500	770
Shrink ring type	RINGFEDER RfN 4061 24 × 50	RINGFEDER RfN 4061 30× 60
Torque [Nm] that can be transmitted by the shrink ring	324	514
Axial force $F_{ax,ss}$ [N] that can be transmitted by the shrink ring	32000	41000
Surface pressure on the hub of the shrink ring [N/mm²]	272	228
Pin diameter of the threaded spindle dh1 [mm]	20	25
Protection class	IP40	IP40
Thermal class	155 (F) in accordance with EN 60034-1 (155 °C, heating Δϑ = 100 K)	
Surface[4]	Matte black as per RAL 9005	
Noise level	Limit values in accordance with EN 60034-9	
Cooling	IC 410 convection cooling	

[1] Axial angular contact ball bearing for screw drives, grease-lubricated, can be relubricated

[2] Or comparable products from other providers

[3] Or comparable products from other providers

[4] Repainting the motor will change the thermal properties and therefore the performance limits.

9.6.2 Electrical features

General electrical features of the motor are described in this chapter. Details can be found in the "Selection tables" chapter.

Feature	Description
DC link voltage	DC 540 V (max. 620 V) on STOBER drive controllers
Winding	Three-phase, single-tooth coil design
Circuit	Star, center not led through
Protection class	I (protective grounding) in accordance with EN 61140
Number of pole pairs	7

9.6.3 Ambient conditions

Standard ambient conditions for transport, storage and operation of the motor are described in this chapter.

Feature	Description
Surrounding temperature for transport/storage	−30 °C to +85 °C
Surrounding temperature for operation	−15 °C to +40 °C
Relative humidity	5% to 95%, no condensation
Installation altitude	≤ 1000 m above sea level
Shock load	≤ 50 m/s^2 (5 g), 6 ms in accordance with EN 60068-2-27

Notes

- STOBER synchronous servo motors are not suitable for potentially explosive atmospheres.
- Secure the power cables close to the motor so that vibrations of the cable do not place impermissible loads on the motor plug connector.
- Note that the braking torques of the holding brake (optional) may be reduced by shock loading.
- At operating temperatures below 0 °C, note that the discs of the holding brake (optional) may ice up.

9.6.4 Threaded nut

The driven threaded nut (stationary mounting of threaded spindle) has the following advantages compared to the driven threaded spindle (stationary mounting of threaded nut):

- Higher axial velocity can be achieved with long threaded spindles because the swinging of the threaded spindle is less problematic.
- Drastic reduction in the power loss of the threaded spindle bearing because the stretching forces of the threaded spindle do not have to be channeled through the bearing.
- Liquid cooling of the threaded spindle is easier.
- Increased axial rigidity and torsional rigidity of the threaded spindle (especially with a high pitch/diameter ratio) because the axial forces and torques at both ends of the threaded spindle can be channeled to the surrounding structure.

9.6.4.1 Lubrication of the threaded nut

As the system makes supplying lubricant to the driven threaded nut difficult, it should be lubricated via the threaded spindle. The following options are available for this purpose.

- For threaded nut with axial motion: using a lubrication channel in the threaded spindle that is implemented axially parallel up to the tool change position of the threaded nut. Lubricant can be injected into the threaded nut through a cross-hole if it is correctly aligned in this position. The amount of lubricant is generally sufficient until the next tool change without any problems.
- For threaded spindle with axial motion: using lubrication brushes attached to the machine that are connected to the lubrication supply and dispense the lubricant to the threaded spindle as it moves axially.

Lubricants that enter into the inside of the motor can impair the function of the holding brake and encoder. Therefore, take the protection class of the synchronous servo motor into account when configuring your screw drive, especially when installing the synchronous servo motor vertically with the A side on top. For detailed information about lubricating the screw drive, contact your screw drive manufacturer.

9.6.4.2 Possible combinations with ball screw nuts in accordance with DIN 69051-5

As the screw drive is not included in the scope of delivery from STOBER, you can find information in the following chapters about possible combinations of the EZM motor with ball screw nuts in accordance with DIN 69051-5 from a few well-known manufacturers. Information about EZM motors for other types of threaded nuts is available on request.

Dimensions of the ball screw nut

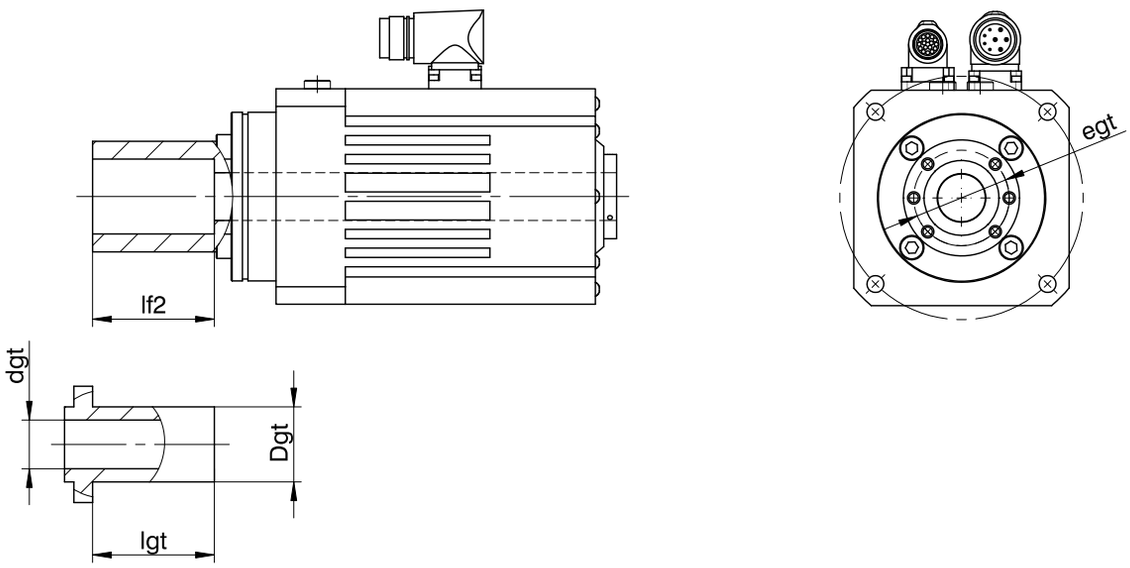

Manufacturer	Type	Ødgt	P_{st}	ØDgt	Øegt	lgt	Motor type	lf2
HIWIN	FSC/DEB	25	10	40	51	51/55	EZM5	66
HIWIN	FSC/DEB	25	25	40	51	60	EZM5	66
HIWIN	FSC/DEB	32	10	50	65	65	EZM7	79
HIWIN	FSC/DEB	32	20	50*	65*	76	EZM7	79
HIWIN	FSC/DEB	32	32	50*	65*	68	EZM7	79
Steinmeyer	Series 2426	25	10	40	51	52	EZM5	66
Steinmeyer	Series 2426	25	20	40	51	40	EZM5	66
Steinmeyer	Series 2426	25	20	40	51	60	EZM5	66
Steinmeyer	Series 2426	25	25	40	51	49	EZM5	66
Steinmeyer	Series 3426	32	10	50	65	65	EZM7	79
Steinmeyer	Series 3426	32	10	50	65	76	EZM7	79
Steinmeyer	Series 3426	32	20	56	71	47	EZM7	79
Steinmeyer	Series 3426	32	20	56	71	67	EZM7	79
Steinmeyer	Series 3426	32	30	56	71	67	EZM7	79
THK	EBA	25	10	40	51	65	EZM5	66
THK	EBA	32	10	50	65	65	EZM7	79
THK	EBA	32	10	50	65	77	EZM7	79
Kammerer	FM	25	10	40	51	50	EZM5	66
Kammerer	FM	25	20	40	51	60	EZM5	66
Kammerer	FM	32	10	50	65	68	EZM7	79
Kammerer	FM	32	10	56*	71*	66	EZM7	79
NSK	PR	25	10	40	51	48	EZM5	66
NSK	LPR	25	25	40	51	51	EZM5	66
NSK	PR	32	10	50	65	47	EZM7	79
NSK	LPR	32	32	50	65	78	EZM7	79
Neff	KGF-D	25	10	40	51	45	EZM5	66
Neff	KGF-D	25	20	40	51	25	EZM5	66
Neff	KGF-D	25	25	40	51	45	EZM5	66
Neff	KGF-D	32	5	50	65	43	EZM7	79
Neff	KGF-D	32	10	50	65	57	EZM7	79

Manufacturer	Type	Ødgt	P_{st}	ØDgt	Øegt	lgt	Motor type	lf2
Rodriguez	SFU	25	5	40	51	40	EZM5	66
Rodriguez	SFS*	25	6	40	51	50	EZM5	66
Rodriguez	SFS*	25	6	40	51	50	EZM5	66
Rodriguez	SFS*	32	6	50	65	39	EZM7	79
Rodriguez	SFS*	31	8	50	65	50	EZM7	79
Rodriguez	FK*	25	5	40	51	33	EZM5	66
Rodriguez	FK*	32	5	50	65	39	EZM7	79
Rodriguez	FK*	32	10	50	65	55	EZM7	79
Rodriguez	FH*	25	10	40	51	25	EZM5	66
Rodriguez	FH*	25	25	40	51	45.5	EZM5	66
Rodriguez	FH*	32	20	56	71	52	EZM7	79
Rodriguez	FH*	32	32	56	71	57.5	EZM7	79

*Design does not correspond to DIN 69051-5.

9.6.5 Threaded spindle

The design of the EZM motor allows for the threaded spindle of the screw drive to be guided through the entire length of the motor. Contact between the threaded spindle and motor shaft during operation is not permitted. The dimensions of the EZM motor are designed so that they can incorporate threaded spindles with a maximum outer diameter that does not exceed the nominal diameter. Be aware when selecting your screw drive that there are spindle nut/threaded spindle combinations for which the maximum threaded spindle diameter exceeds the nominal diameter of the threaded nut or spindle nut. In this case, the attachment of the screw drive to the EZM motor is not permitted (also see the maximum threaded spindle diameter Ødkg feature in Chapter General features).

9.6.6 Encoders

STOBER synchronous servo motors can be designed with different encoder models. The following chapters include information for choosing the optimal encoder for your application.

9.6.6.1 Selection tool for EnDat interface

The following table offers a selection tool for the EnDat interface of absolute encoders.

Feature	EnDat 2.1	EnDat 2.2
Short cycle times	★★☆	★★★
Transfer of additional information along with the position value	–	✓
Expanded power supply range	★★☆	★★★
Key: ★★☆ = good, ★★★ = very good		

9.6.6.2 EnDat encoders

In this chapter, you can find detailed technical data for encoder models that can be selected with EnDat interface.

Encoders with EnDat 2.2 interface

Encoder model	Code	Measuring method	Recordable revolutions	Resolution	Position values per revolution
EnDat 2.2 EBI 135	B1	Inductive	65536	19 bit	524288
EnDat 2.2 ECI 119-G2	C9	Inductive	–	19 bit	524288

Encoders with EnDat 2.1 interface

Encoder model	Code	Measuring method	Recordable revolutions	Resolution	Position values per revolution	Periods per revolution
EnDat 2.1 ECI 119	C4	Inductive	–	19 bit	524288	Sin/Cos 32

Notes

- The encoder code is a part of the type designation of the motor.
- Multiple revolutions of the motor shaft can be recorded only using multi-turn encoders.
- The EnDat 2.2 EBI 135 encoder requires an external buffer battery so that absolute position information is retained after the power supply is turned off (AES option for STOBER drive controllers).

9.6.6.3 Possible combinations with drive controllers

The following table shows the options for combining STOBER drive controllers with selectable encoder models.

Drive controller		SDS 5000	MDS 5000	SDS 5000/ MDS 5000	SD6		SI6	SC6
Drive controller code		AA	AB	AC	AD	AE	**AP**	**AU**
Connection plan ID		442305	442306	442307	442450	442451	**442771**	**443052**
Encoder	**Encoder code**							
EnDat 2.2 EBI 135	B1	✓	✓	–	✓	–	✓	✓
EnDat 2.2 ECI 119-G2	C9	✓	✓	–	✓	–	✓	✓
EnDat 2.1 ECI 119	C4	–	–	✓	–	✓	–	–

Notes

- The drive controller and encoder codes are a part of the type designation of the motor (see the "Type designation" chapter).

9.6.7 Temperature sensor

In this chapter, you can find technical data for the temperature sensors that are installed in STOBER synchronous servo motors for implementing thermal winding protection. To prevent damage to the motor, always monitor the temperature sensor with appropriate devices that will turn off the motor if the maximum permitted winding temperature is exceeded.

Some encoders feature integrated temperature monitoring, the warning and switch-off thresholds of which may overlap with the corresponding values set for the temperature sensor in the drive controller. In some cases, this may result in an instance where an encoder with internal temperature monitoring forces the motor to shut down, even before the motor has reached its nominal data.

You can find information about the electrical connection of the temperature sensor in the "Connection method" chapter.

9.6.7.1 PTC thermistor

The PTC thermistor is installed as a standard temperature sensor in STOBER synchronous servo motors.

The PTC thermistor is a triple thermistor in accordance with DIN 44082 that can be used for monitoring the temperature of each winding phase. The resistance values in the following table and curve refer to a single thermistor in accordance with DIN 44081. These values must be multiplied by 3 for a triple thermistor in accordance with DIN 44082.

Feature	Description
Nominal response temperature ϑ_{NAT}	145 °C ± 5 K
Resistance R −20 °C up to ϑ_{NAT} − 20 K	≤ 250 Ω
Resistance R with ϑ_{NAT} − 5 K	≤ 550 Ω
Resistance R with ϑ_{NAT} + 5 K	≥ 1330 Ω
Resistance R with ϑ_{NAT} + 15 K	≥ 4000 Ω
Operating voltage	≤ DC 7.5 V
Thermal response time	< 5 s
Thermal class	155 (F) in accordance with EN 60034-1 (155 °C, heating Δϑ = 100 K)

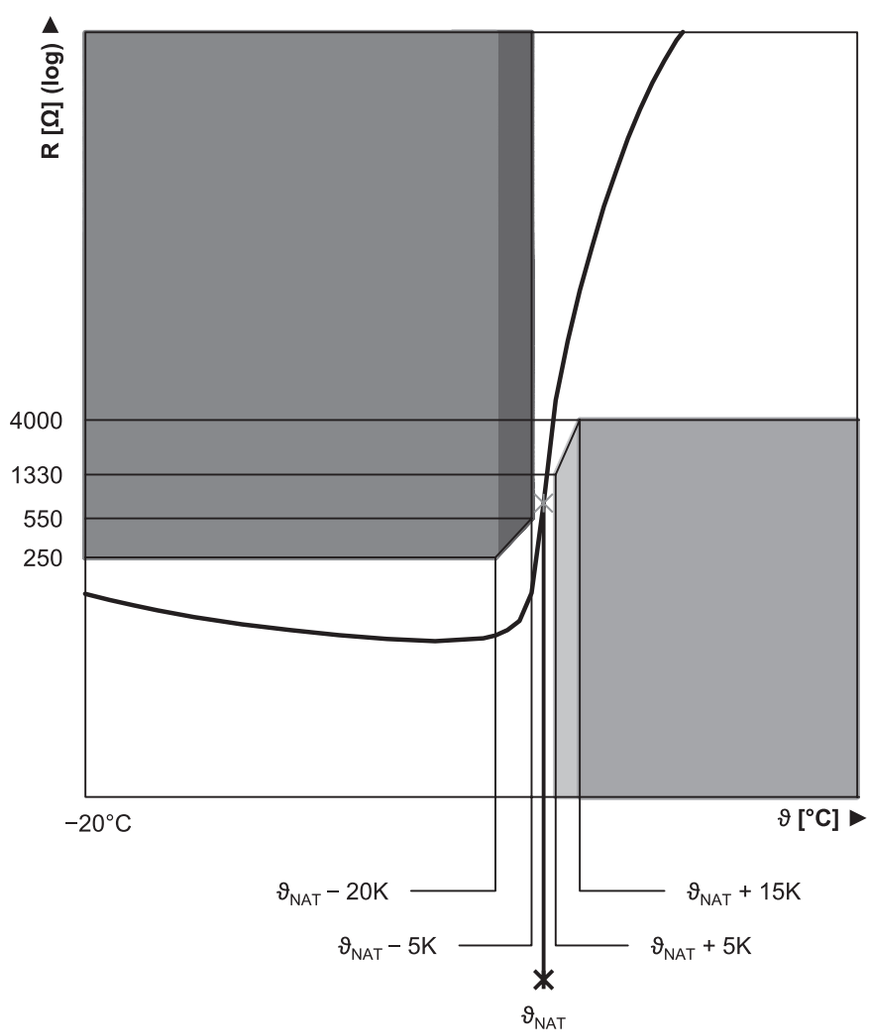

Fig. 2: PTC thermistor curve (single thermistor)

9.6.7.2 Pt1000 temperature sensor

STOBER synchronous servo motors are available in versions with a Pt1000 temperature sensor. The Pt1000 is a temperature-dependent resistor that has a resistance curve with a linear relationship with temperature. As a result, the Pt1000 allows for measurements of the winding temperature. These measurements are limited to one phase of the motor winding, however. In order to adequately protect the motor from exceeding the maximum permitted winding temperature, use a i^2t model in the drive controller to monitor the winding temperature.

Avoid exceeding the specified measurement current so that the measured values are not falsified due to self-heating of the temperature sensor.

Feature	Description
Measurement current (constant)	2 mA
Resistance R for ϑ = 0 °C	1000 Ω
Resistance R for ϑ = 80 °C	1300 Ω
Resistance R for ϑ = 150 °C	1570 Ω

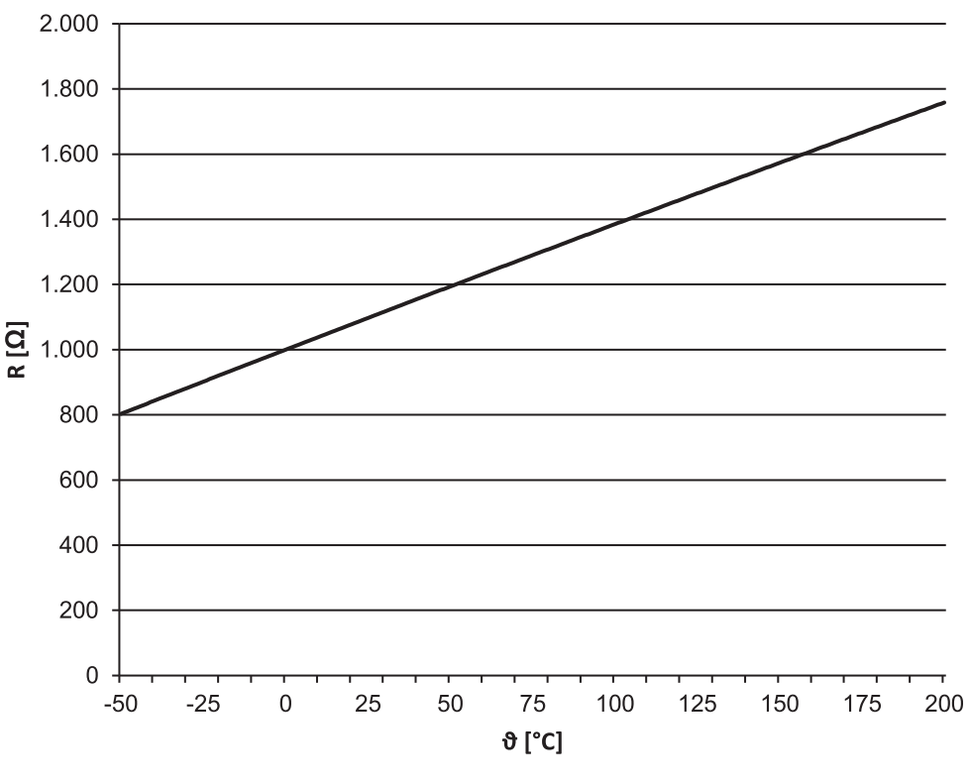

Fig. 3: Pt1000 temperature sensor characteristic curve

9.6.8 Cooling

An EZM motor is cooled by convection cooling (IC 410 in accordance with EN 60034-6). The air flowing around the motor is heated by the radiated motor heat and rises.

9.6.9 Holding brake

STOBER synchronous servo motors can be equipped with a backlash-free holding brake using permanent magnets in order to secure the motor shaft when at a standstill. The holding brake engages automatically if the voltage drops.

The holding brake is designed for a high number of operations (B_{10} = 10 million operations, B_{10d} = 20 million operations).

Nominal voltage of permanent magnet holding brake: DC 24 V ± 5%, smoothed.

Observe the following during project configuration:

- The holding brake is designed to keep the motor shaft from moving. Activate braking processes during operation using the corresponding electrical functions of the drive controller. In exceptional circumstances, the holding brake can be used for braking from full speed (following a power failure or when setting up the machine). The maximum permitted work done by friction $W_{B,Rmax/h}$ may not be exceeded.
- Note that the braking torque M_{Bdyn} may initially be up to 50% less when braking from full speed. As a result, the braking effect has a delayed action and braking distances become longer.
- Regularly perform a brake test to ensure the functional safety of the brakes. Details can be found in the documentation of the motor and the drive controller.
- Connect a varistor of type S14 K35 (or comparable) in parallel to the brake coil to protect your machine from switching surges. (Not necessary for connecting the holding brake to STOBER drive controllers of the 5th and 6th generation with a BRS/BRM brake module).
- The holding brake of the motor does not offer adequate safety for persons in the hazardous area of gravity-loaded vertical axes. Therefore take additional measures to minimize risk, e.g. by providing a mechanical substructure for maintenance work.
- Take into consideration voltage losses in the connection cables that connect the voltage source to the holding brake connections.
- The holding torque of the brake can be reduced by shock loading. Information about shock loading can be found in the "Ambient conditions" chapter.
- At operating temperatures from −15 °C to 0 °C, a cold holding brake in the released state may cause operating noises. As the temperature of the holding brake increases, these noises decrease such that operating noises are not heard when using holding brake at operating temperature in the released state.

Calculation of work done by friction per braking process

$$W_{B,R/B} = \frac{J_{tot} \cdot n^2}{182.4} \cdot \frac{M_{Bdyn}}{M_{Bdyn} \pm M_L}, \; M_{Bdyn} > M_L$$

The sign of M_L is positive if the movement runs vertically upwards or horizontally and it is negative if the movement runs vertically down.

Calculation of the stop time

$$t_{dec} = 2.66 \cdot t_{1B} + \frac{n \cdot J_{tot}}{9.55 \cdot M_{Bdyn}}$$

Switching behavior

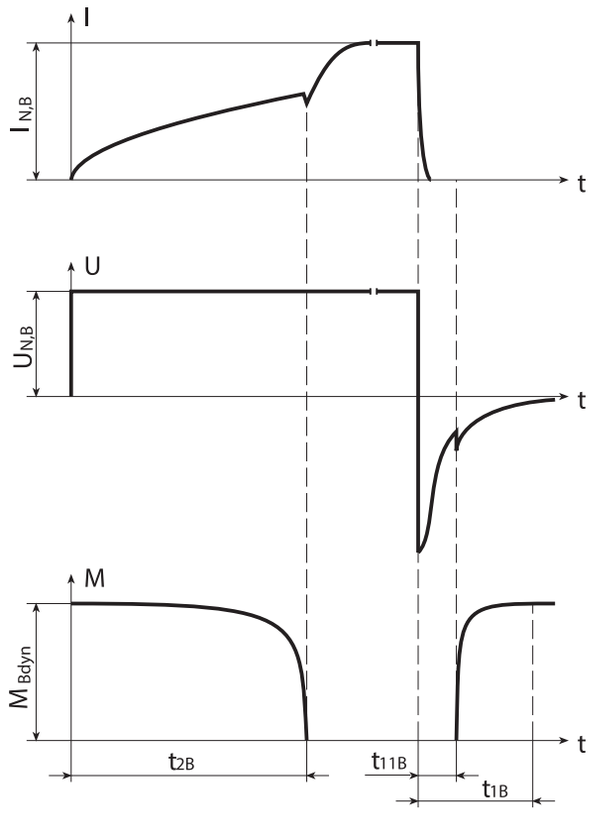

Fig. 4: Holding brake – Switching behavior

Technical data

Type	M_{Bstat} [Nm]	M_{Bdyn} [Nm]	$I_{N,B}$ [A]	$W_{B,Rmax/h}$ [kJ/h]	N_{Bstop}	J_{Bstop} [kgcm²]	$W_{B,Rlim}$ [kJ]	t_{2B} [ms]	t_{11B} [ms]	t_{1B} [ms]	$x_{B,N}$ [mm]	ΔJ_B [kgcm²]	Δm_B [kg]
EZM511	18	15	1.1	11.0	2100	52.5	550	55	3.0	30	0.3	5.970	2.50
EZM512	18	15	1.1	11.0	1850	59.1	550	55	3.0	30	0.3	5.970	2.50
EZM513	18	15	1.1	11.0	1700	65.5	550	55	3.0	30	0.3	5.970	2.50
EZM711	28	25	1.1	25.0	1900	149	1400	120	4.0	40	0.4	14.100	4.33
EZM712	28	25	1.1	25.0	1650	168	1400	120	4.0	40	0.4	14.100	4.33
EZM713	28	25	1.1	25.0	1500	186	1400	120	4.0	40	0.4	14.100	4.33

9.6.10 Connection method

The following chapters describe the connection technology of STOBER synchronous servo motors in the standard version on STOBER drive controllers. You can find further information relating to the drive controller type that was specified in your order in the connection plan that is delivered with every synchronous servo motor.

9.6.10.1 Connection of the motor housing to the grounding conductor system

Connect the motor housing to the grounding conductor system of the machine in order to prevent personal injury and faulty triggering of residual current protective devices.

All attachment parts required for the connection of the grounding conductor to the motor housing are delivered with the motor. The grounding screw of the motor is identified with the symbol ⏚ in accordance with IEC 60417-DB. The cross-section of the grounding conductor has to be at least as large as the cross-section of the lines in the power connection.

9.6.10.2 Plug connectors

STOBER synchronous servo motors are equipped with twistable quick-lock plug connectors in the standard version. Details can be found in this chapter.

The figures represent the position of the plug connectors upon delivery.

Turning ranges of plug connectors

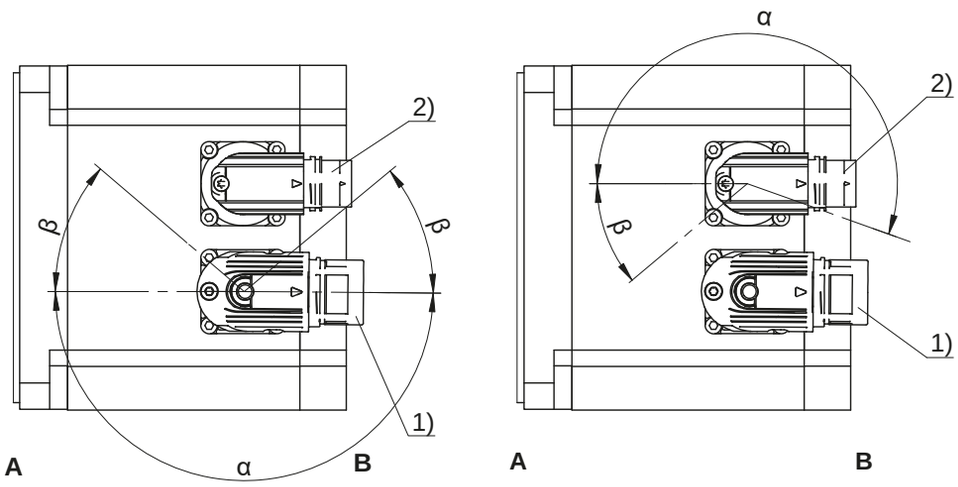

1	Power plug connector	2	Encoder plug connector
A	Attachment or output side of the motor	B	Rear side of the motor

Power plug connector features

Motor type	Size	Connection	Turning range	
			α	β
EZM	con.23	Quick lock	180°	40°

Encoder plug connector features

Motor type	Size	Connection	Turning range	
			α	β
EZM	con.17	Quick lock	195°	35°

Notes

- The number after "con." indicates the approximate external thread diameter of the plug connector in mm (for example, con.23 designates a plug connector with an external thread diameter of about 23 mm).
- In turning range β, the power or encoder plug connectors can be turned only if doing so does not cause them to collide.

9.6.10.3 Connection assignment of the power plug connector

The colors of the connecting wires inside the motor are specified in accordance with IEC 60757.

Plug connector size con.23

Connection diagram	Pin	Connection	Color
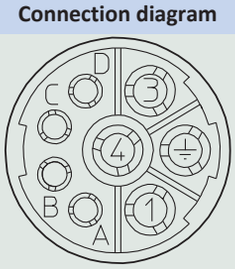	1	U phase	BK
	3	V phase	BU
	4	W phase	RD
	A	Brake +	RD
	B	Brake –	BK
	C	Temperature sensor +	
	D	Temperature sensor –	
	⏚	Grounding conductor	GNYE

9.6.10.4 Connection assignment of the encoder plug connector

The size and connection assignment of the encoder plug connectors depend on the model of encoder installed and the size of the motor. The colors of the connecting wires inside the motor are specified in accordance with IEC 60757.

EnDat 2.1/2.2 digital encoders, plug connector size con.17

Connection diagram	Pin	Connection	Color
	1	Clock +	VT
	2	Up sense	BNGN
	3		
	4		
	5	Data –	PK
	6	Data +	GY
	7		
	8	Clock –	YE
	9		
	10	0 V GND	WHGN
	11		
	12	Up +	BNGN
	Pin 2 is connected to pin 12 in the plug connector		

EnDat 2.2 digital encoder with battery buffering, plug connector size con.17

Connection diagram	Pin	Connection	Color
	1	Clock +	VT
	2	UBatt +	BU
	3	UBatt –	WH
	4		
	5	Data –	PK
	6	Data +	GY
	7		
	8	Clock –	YE
	9		
	10	0 V GND	WHGN
	11		
	12	Up +	BNGN
	UBatt+ = DC 3.6 V for encoder model EBI in combination with the AES option of STOBER drive controllers		

EnDat 2.1 encoder with sin/cos incremental signals, plug connector size con.17

Connection diagram	Pin	Connection	Color
	1	Up sense	BU
	2		
	3		
	4	0 V sense	WH
	5		
	6		
	7	Up +	BNGN
	8	Clock +	VT
	9	Clock –	YE
	10	0 V GND	WHGN
	11		
	12	B + (Sin +)	BUBK
	13	B – (Sin –)	RDBK
	14	Data +	GY
	15	A + (Cos +)	GNBK
	16	A – (Cos –)	YEBK
	17	Data –	PK

9.7 Project configuration

Information about drive project configuration can be found in the following chapters. For safe operation, be sure to comply with the following limit values during the project configuration for your drive:

- Permitted mechanical load of the shrink ring that connects the motor shaft to the threaded spindle (see the chapter Design of the screw drive)
- Permitted thermal load of the motor (see the chapter Calculation of the operating point)
- Permitted bearing load and achievable service life (see the chapter Calculation of the service life).

An explanation of the formula symbols can be found in Chapter Symbols in formulas.

9.7.1 Design of the screw drive

You can use the information below to select a suitable synchronous servo motor for your screw drive. For detailed design information on the screw drive, please contact the screw drive manufacturer.

Axial velocity

The axial velocity of a screw drive can be calculated as follows:

$$v_{ax} = \frac{n_{mot} \cdot P_{st}}{60}$$

The following diagram represents the characteristic curves of screw drives with common pitches that can be implemented with STOBER synchronous servo motors for screw drives.

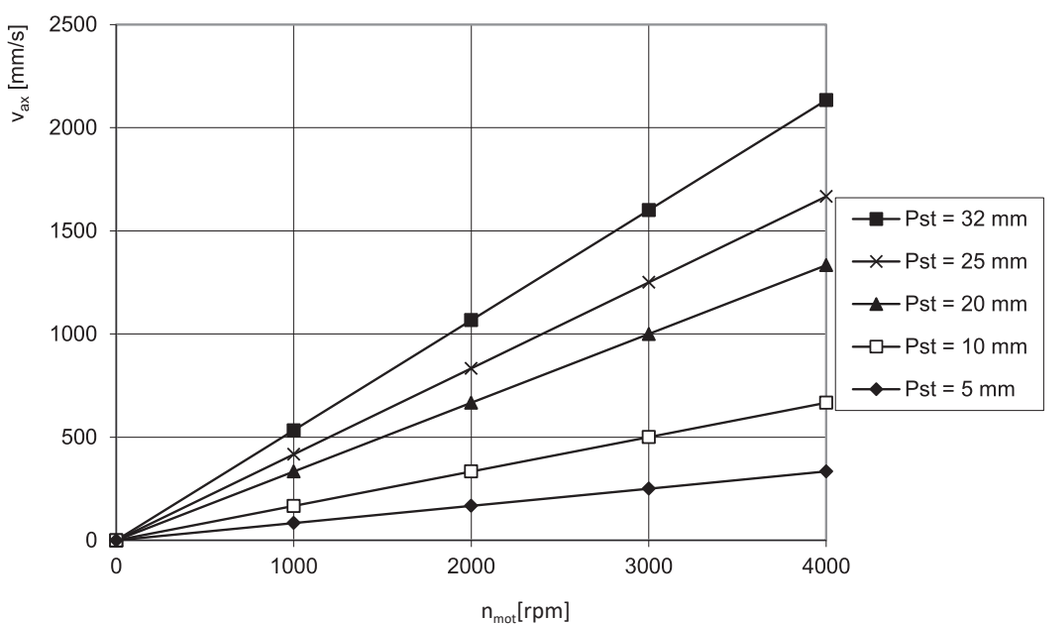

Axial force

The axial force of a screw drive can be calculated as follows:

$$F_{ax} = \frac{2000 \cdot M \cdot \pi \cdot \eta_{gt}}{P_{st}}$$

With a spindle pitch P_{st} = 5, the shrink ring between the motor shaft and threaded spindle can be overloaded when using the maximum torque of EZ502, EZ503, EZ702 or EZ703 motors. To prevent this, the following condition for the maximum permitted axial force F_{ax} must be observed in these application cases. Values for $F_{ax,ss}$ and dh1 can be found in the chapter General features. For more details on the shrink ring, contact the manufacturer Ringfeder.

$$F_{ax} \leq \frac{F_{ax,ss}}{1 + \frac{P_{st}}{\pi \cdot \eta_{gt} \cdot dh1}}$$

You can use the following table to select a motor type / screw drive pitch combination. The axial forces in the table are calculated for M_0 and η_{gt} = 0.9.

	M_0 [Nm]	F_{ax0} P_{st}=5 [N]	F_{ax0} P_{st}=10 [N]	F_{ax0} P_{st}=15 [N]	F_{ax0} P_{st}=20 [N]	F_{ax0} P_{st}=25 [N]	F_{ax0} P_{st}=32 [N]
EZM501U	4.3	4807	2403	1602	1202	961	751
EZM502U	7.6	8539	4269	2846	2135	1708	1334
EZM503U	10.6	11988	5994	3996	2997	2398	1873
EZM511U	4.3	4807	2403	1602	1202	961	751
EZM512U	7.6	8539	4269	2846	2135	1708	1334
EZM513U	10.6	11988	5994	3996	2997	2398	1873
EZM701U	7.3	8256	4128	2752	2064	1651	1290
EZM702U	12.9	14590	7295	4863	3647	2918	2280
EZM703U	18.9	21375	10688	7125	5344	4275	3340
EZM711U	7.3	8256	4128	2752	2064	1651	1290
EZM712U	13.0	14646	7323	4882	3662	2929	2288
EZM713U	18.9	21375	10688	7125	5344	4275	3340

If the synchronous servo motor at absolute standstill (n_{mot}=0) must hold the load using its torque, the following formula defines the permitted axial force:

$$F_{ax0,abs} \leq 0.6 \cdot \frac{2000 \cdot M_0 \cdot \pi \cdot \eta_{gt}}{P_{st}}$$

9.7.2 Calculation of the operating point

In this chapter, you can find information needed to calculate the operating point.

The following calculations refer to a representation of the power delivered at the motor shaft based on the following example:

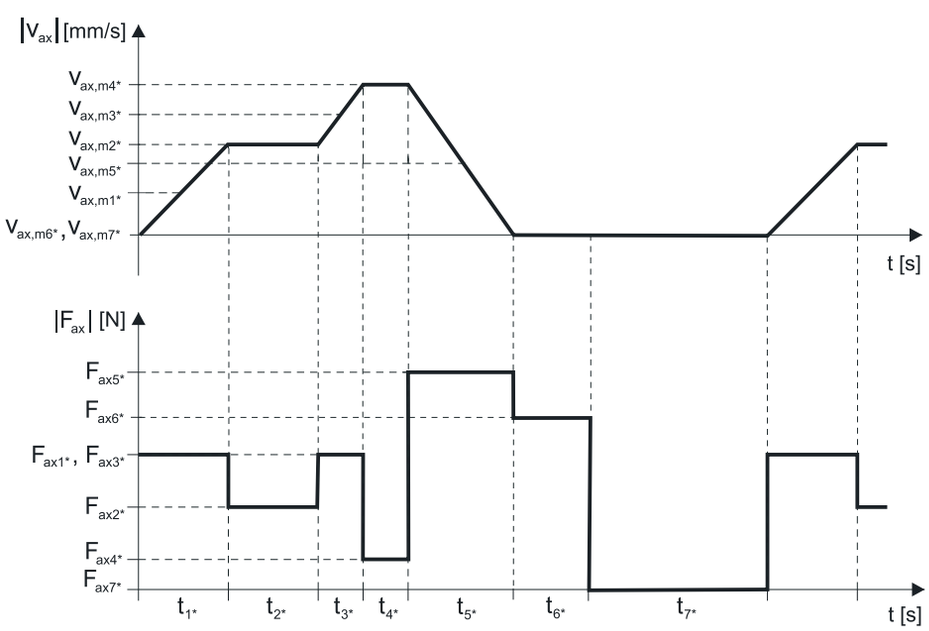

Calculation of the actual average axial velocity

$$v_{ax,m*} = \frac{|v_{ax,m1*}| \cdot t_{1*} + \ldots + |v_{ax,mn*}| \cdot t_{n*}}{t_{1*} + \ldots + t_{n*}}$$

If $t_{1*} + \ldots + t_{6*} \geq 6$ min, determine $v_{ax,m*}$ without the rest phase t_{7*}.

Calculation of the actual average speed

$$n_{m*} = \frac{v_{ax,m*} \cdot 60}{P_{st}}$$

Check the condition $n_{m*} \leq n_N$ and adjust the parameters as needed.

Calculation of the actual effective axial force

$$F_{ax,eff*} = \sqrt{\frac{t_{1*} \cdot F_{ax1*}^{2} + \ldots + t_{n*} \cdot F_{ax,n*}^{2}}{t_{1*} + \ldots + t_{n*}}}$$

Calculation of the actual effective torque

$$M_{eff*} = \frac{F_{ax,eff*} \cdot P_{st}}{2000 \cdot \pi \cdot \eta_{gt}}$$

You can find the value for the torque of the motor at operating point M_{op} with the determined average input speed n_{m*} in the motor curve in Chapter [▶ 9.3]. In doing so, keep the size of the motor in mind. The figure below shows an example of reading the torque M_{op} of a motor at the operating point.

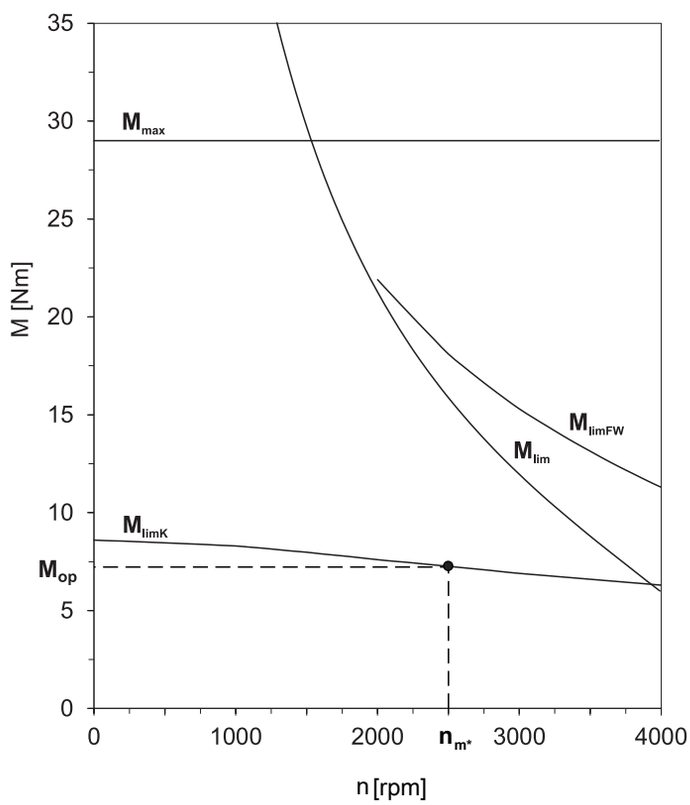

Check the condition: $M_{eff*} \leq M_{op}$ and adjust the parameters as needed.

9.7.3 Calculation of the bearing service life

The service life of the axial angular contact ball bearing of a STOBER synchronous servo motor for screw drives is generally longer than the service life of the screw drive bearing.

You can calculate the service life of the axial angular contact ball bearing as follows (the value for C_{dyn} can be found in the "General features" chapter):

$$L_{10} = \left(\frac{C_{dyn}}{F_{ax,eff*}} \right)^3 \cdot 10^6$$

The following diagram shows the bearing service life L_{10}.

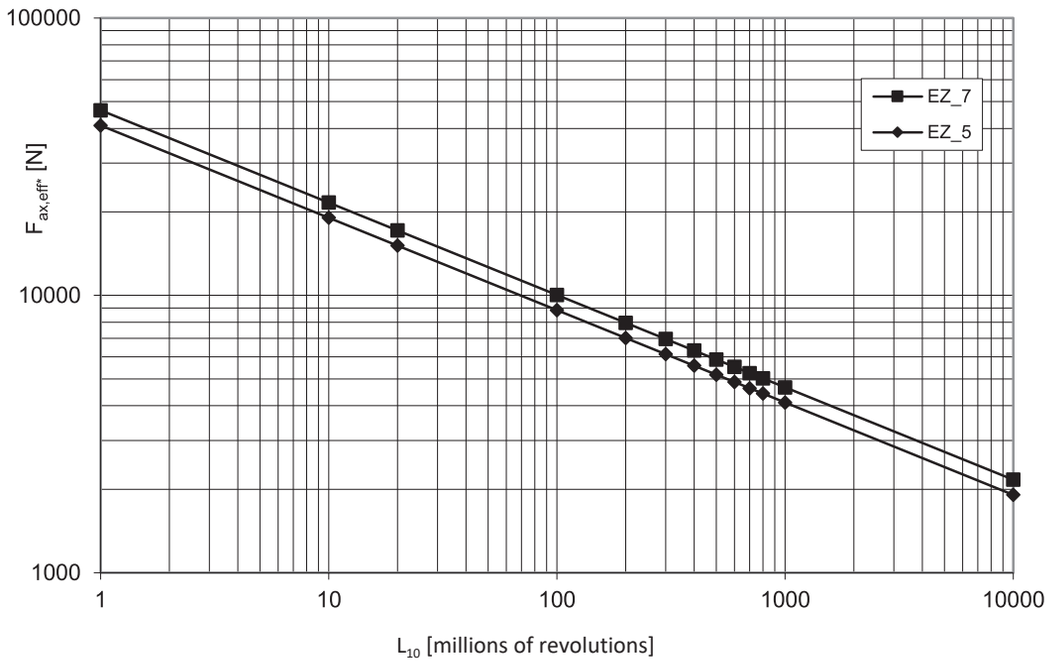

$$L_{10h} = \frac{L_{10}}{n_{m*} \cdot 60}$$

9.8 Further information

9.8.1 Directives and standards

STOBER synchronous servo motors meet the requirements of the following directives and standards:

- (Low Voltage) Directive 2014/35/EU
- EN 60034-1:2010 + Cor.:2010
- EN 60034-5:2001 + A1:2007
- EN 60034-6:1993

9.8.2 Identifiers and test symbols

STOBER synchronous servo motors have the following identifiers and test symbols:

CE mark: The product meets the requirements of EU directives.

cURus test symbol "Servo and Stepper Motors – Component"; registered under UL number E488992 with Underwriters Laboratories USA (optional).

9.8.3 Additional documentation

Additional documentation related to the product can be found at
http://www.stoeber.de/en/downloads/

Enter the ID of the documentation in the Search... field.

Documentation	ID
Operating manual for EZ synchronous servo motors	443032_en

10 EZS synchronous servo motors for screw drives

Table of contents

10.1 Overview ... 264

10.2 Selection tables ... 265

10.2.1 EZS motors with convection cooling ... 265

10.2.2 EZS motors with forced ventilation ... 265

10.3 Torque/speed curves ... 266

10.4 Dimensional drawings ... 269

10.4.1 EZS motors with convection cooling (One Cable Solution) ... 269

10.4.2 EZS motors with convection cooling ... 270

10.4.3 EZS motors with forced ventilation (One Cable Solution) ... 271

10.4.4 EZS motors with forced ventilation ... 272

10.5 Type designation ... 273

10.6 Product description ... 273

10.6.1 General features ... 273

10.6.2 Electrical features ... 274

10.6.3 Ambient conditions ... 274

10.6.4 Lubrication of the screw drive ... 274

10.6.5 Encoders ... 274

10.6.6 Temperature sensor ... 277

10.6.7 Cooling ... 278

10.6.8 Holding brake ... 279

10.6.9 Connection method ... 280

10.7 Project configuration ... 284

10.7.1 Design of the screw drive ... 284

10.7.2 Calculation of the operating point ... 286

10.7.3 Calculation of the bearing service life ... 287

10.8 Further information ... 288

10.8.1 Directives and standards ... 288

10.8.2 Identifiers and test symbols ... 288

10.8.3 Additional documentation ... 288

10 Synchronous servo motors for screw drives

EZS

10.1 Overview

Synchronous servo motors for screw drives (direct drive for threaded spindle)

Features

Backlash-free connection with the threaded spindle using a clamping unit	✓
Axial angular contact ball bearing acting on two sides for direct absorption of the threaded spindle forces	✓
Super compact due to tooth-coil winding method with the highest possible copper fill factor	✓
Backlash-free holding brake (optional)	✓
Convection cooling or forced ventilation (optional)	✓
Optical, inductive EnDat absolute encoders or resolvers	✓
Elimination of referencing with multi-turn absolute encoders (optional)	✓
One Cable Solution (OCS) with EnDat 3 encoder (optional)	✓
Electronic nameplate for fast and reliable commissioning	✓
Rotating plug connectors with quick lock	✓

Axial forces

F_{ax}	760 – 31271 N

10.2 Selection tables

The technical data specified in the selection tables applies to:

- Installation altitudes up to 1000 m above sea level
- Surrounding temperatures from −15 °C to +40 °C
- Operation on a STOBER drive controller
- DC link voltage U_{ZK} = DC 540 V
- Coating: RAL 9005 Jet black, matte

In addition, the technical data applies to an uninsulated design with the following thermal mounting conditions:

Type	Dimensions of steel mounting flange (thickness x width x height)	Convection surface area Steel mounting flange
EZS5	23 x 210 x 275 mm	0.16 m^2
EZS7	28 x 300 x 400 mm	0.3 m^2

Formula symbols

An explanation of the formula symbols can be found in Chapter Symbols in formulas.

Observe the additional information on the following formula symbols:

- I_0 = RMS value of the line-to-line current when stall torque M_0 is generated (tolerance ±5%).
- I_{max} = RMS value of the short-term maximum permitted line-to-line current when maximum torque M_{max} is generated (tolerance ±5%). Exceeding I_{max} may lead to irreversible damage (demagnetization) of the rotor.
- I_N = RMS value of the line-to-line current when nominal torque M_N is generated at the nominal point (tolerance ±5%).
- M_0 = Torque that a motor is continuously able to deliver at a speed of 10 rpm (tolerance ±5%). At a speed of 0 rpm, a minor continuous torque has to be taken into account. Contact your STOBER customer advisor for such an application.

10.2.1 EZS motors with convection cooling

Type	K_{EM} [V/1000 rpm]	n_N [rpm]	M_N [Nm]	I_N [A]	$K_{M,N}$ [Nm/A]	P_N [kW]	M_0 [Nm]	I_0 [A]	K_{M0} [Nm/A]	M_R [Nm]	M_{max} [Nm]	I_{max} [A]	R_{U-V} [Ω]	L_{U-V} [mH]	T_{el} [ms]	J [kcgm²]	m [kg]
EZS501U	97	3000	3.85	3.65	1.05	1.2	4.30	3.95	1.19	0.40	16.0	22.0	3.80	23.50	6.18	6.50	7.10
EZS502U	121	3000	6.90	5.30	1.30	2.2	7.55	5.70	1.40	0.40	31.0	33.0	2.32	16.80	7.24	8.80	8.50
EZS503U	119	3000	9.10	6.70	1.36	2.9	10.7	7.60	1.46	0.40	43.0	41.0	1.25	10.00	8.00	11.1	10.0
EZS701U	95	3000	6.65	6.80	0.98	2.1	7.65	7.70	1.07	0.59	20.0	25.0	1.30	12.83	9.87	20.3	12.6
EZS702U	133	3000	11.0	7.75	1.42	3.5	13.5	9.25	1.53	0.59	41.0	36.0	1.00	11.73	11.73	25.6	14.9
EZS703U	122	3000	15.3	10.8	1.42	4.8	19.7	13.5	1.50	0.59	65.0	62.0	0.52	6.80	13.08	30.8	17.2

10.2.2 EZS motors with forced ventilation

Type	K_{EM} [V/1000 rpm]	n_N [rpm]	M_N [Nm]	I_N [A]	$K_{M,N}$ [Nm/A]	P_N [kW]	M_0 [Nm]	I_0 [A]	K_{M0} [Nm/A]	M_R [Nm]	M_{max} [Nm]	I_{max} [A]	R_{U-V} [Ω]	L_{U-V} [mH]	T_{el} [ms]	J [kcgm²]	m [kg]
EZS501B	97	3000	5.10	4.70	1.09	1.6	5.45	5.00	1.17	0.40	16.0	22.0	3.80	23.50	6.18	6.50	9.00
EZS502B	121	3000	10.0	7.80	1.28	3.1	10.9	8.16	1.38	0.40	31.0	33.0	2.32	16.80	7.24	8.80	10.4
EZS503B	119	3000	14.1	10.9	1.29	4.4	15.6	11.8	1.35	0.40	43.0	41.0	1.25	10.00	8.00	11.1	11.9
EZS701B	95	3000	9.35	9.50	0.98	2.9	10.2	10.0	1.07	0.59	20.0	25.0	1.30	12.83	9.87	20.3	15.5
EZS702B	133	3000	16.3	11.8	1.38	5.1	19.0	12.9	1.51	0.59	41.0	36.0	1.00	11.73	11.73	25.6	17.8
EZS703B	122	3000	23.7	18.2	1.30	7.4	27.7	20.0	1.41	0.59	65.0	62.0	0.52	6.80	13.08	30.8	20.1

10.3 Torque/speed curves

Torque/speed curves depend on the nominal speed and/or winding design of the motor and the DC link voltage of the drive controller that is used. The following torque/speed curves apply to the DC link voltage DC 540 V.

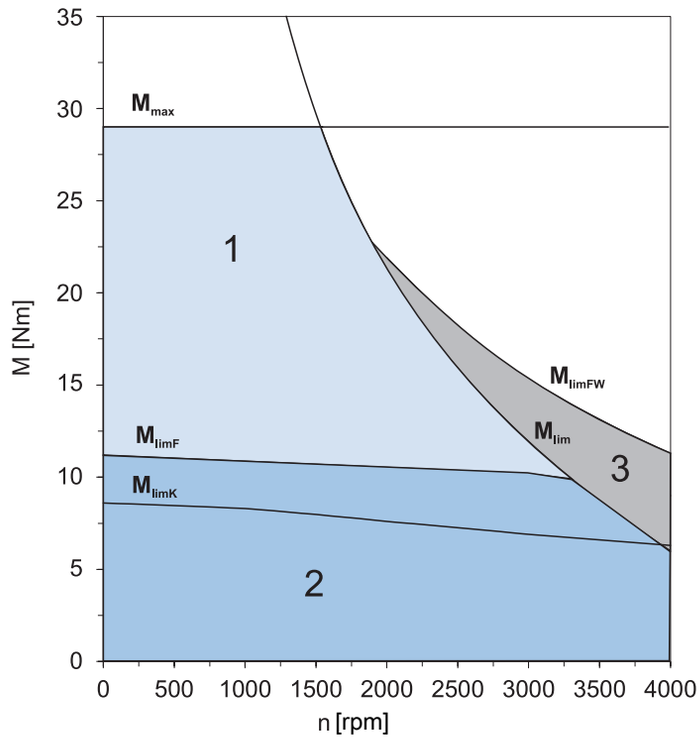

Fig. 1: Explanation of a torque/speed curve

1	Torque range for brief operation (ED_{10} < 100%) with $\Delta\vartheta$ = 100 K	2	Torque range for continuous operation with constant load (S1 mode, ED_{10} = 100%) with $\Delta\vartheta$ = 100 K
3	Field weakening range (can be used only with operation on STOBER drive controllers)		

EZS501 (n_N=3000 rpm)

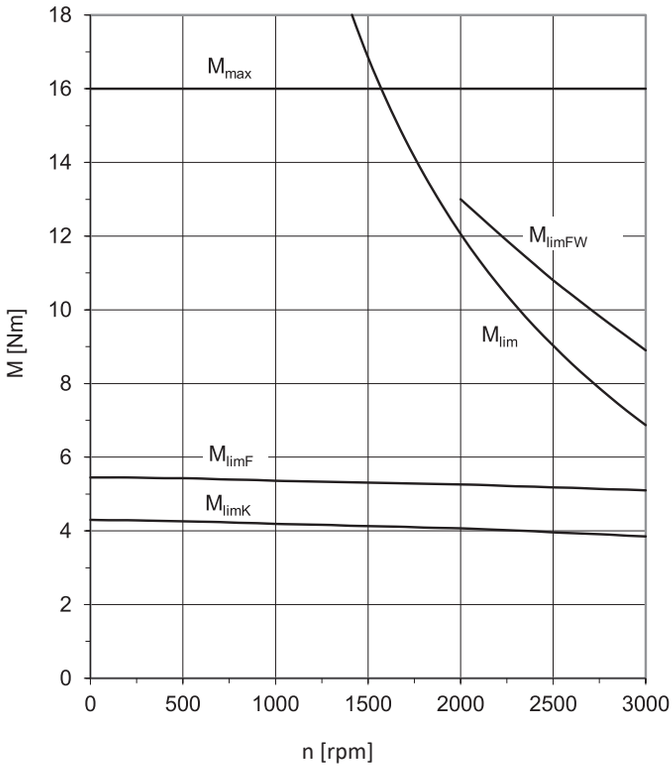

EZS502 (n_N=3000 rpm)

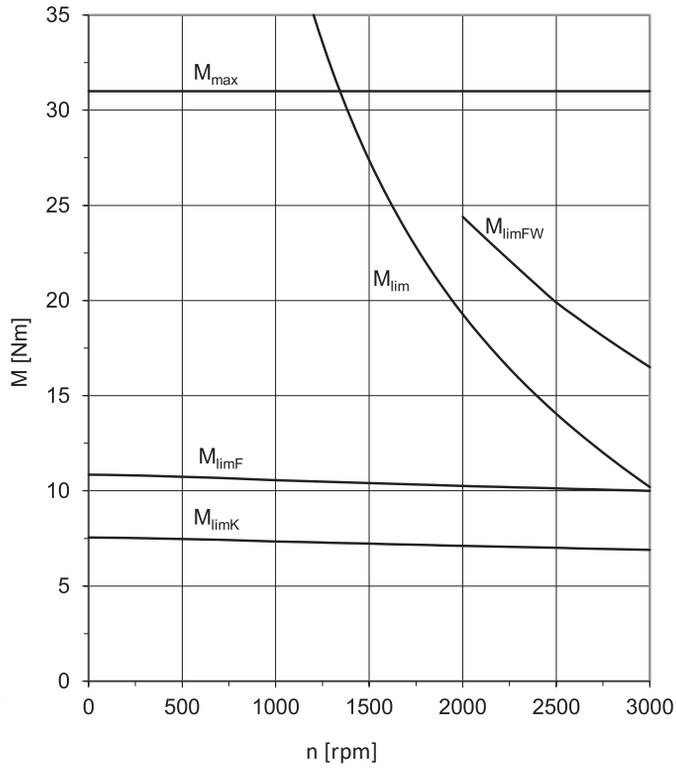

EZS503 (n_N=3000 rpm)

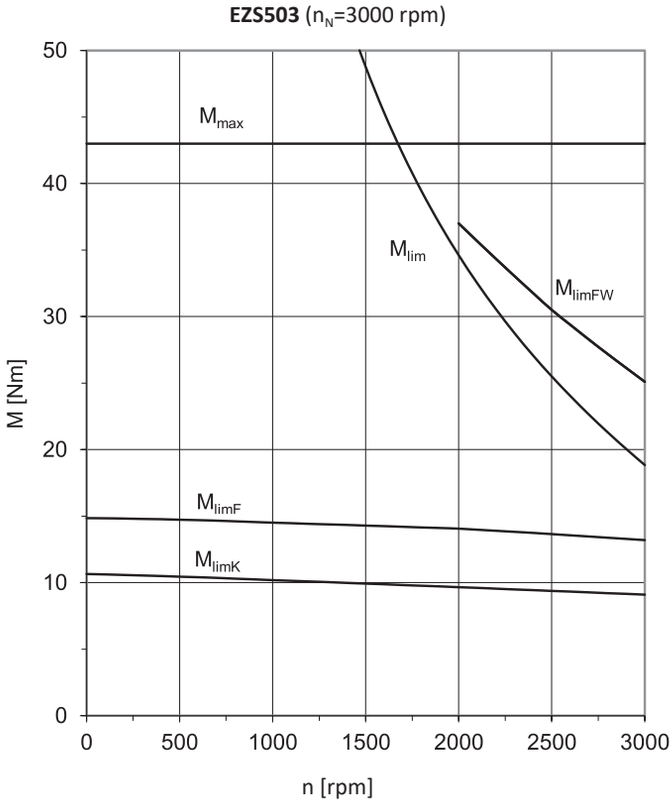

EZS701 (n_N=3000 rpm)

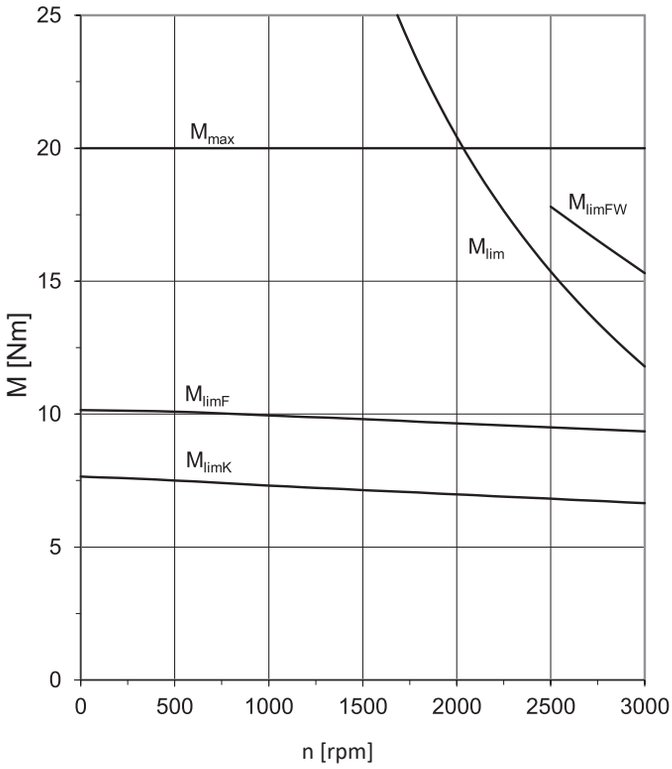

EZS702 (n_N=3000 rpm)

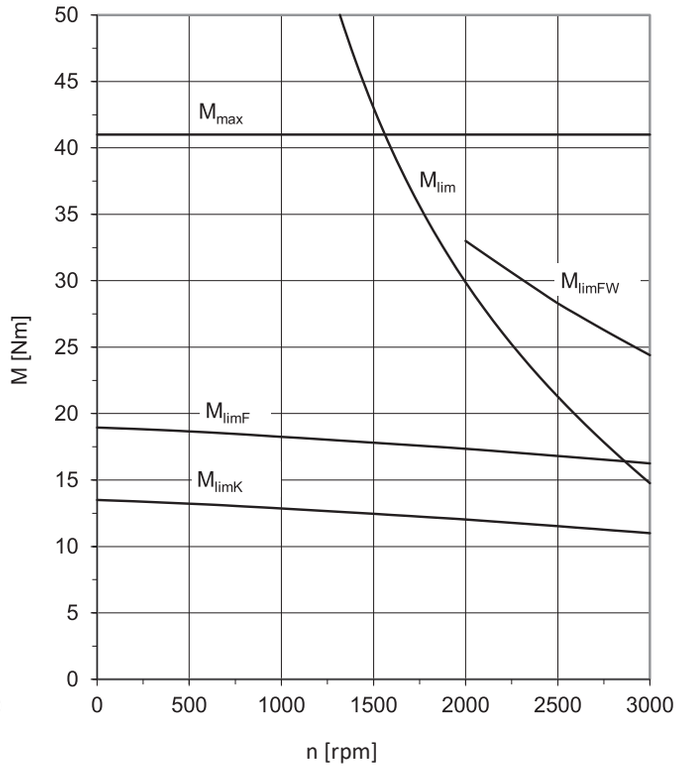

EZS703 (n_N=3000 rpm)

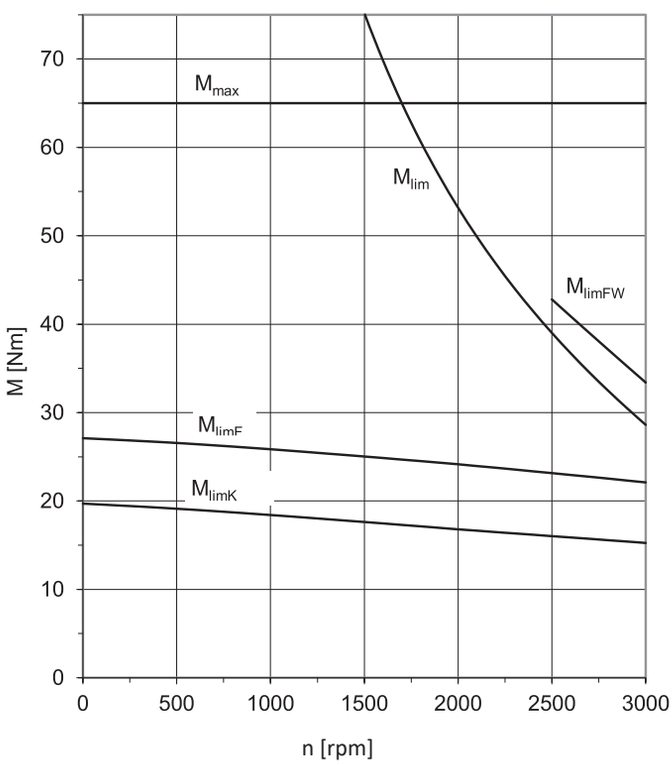

10.4 Dimensional drawings

In this chapter, you can find the dimensions of the motors.

Dimensions can exceed the specifications of ISO 2768-mK due to casting tolerances or accumulation of individual tolerances.

We reserve the right to make dimensional changes due to ongoing technical development.

You can download 3D models of our standard drives at http://configurator.stoeber.de.

10.4.1 EZS motors with convection cooling (One Cable Solution)

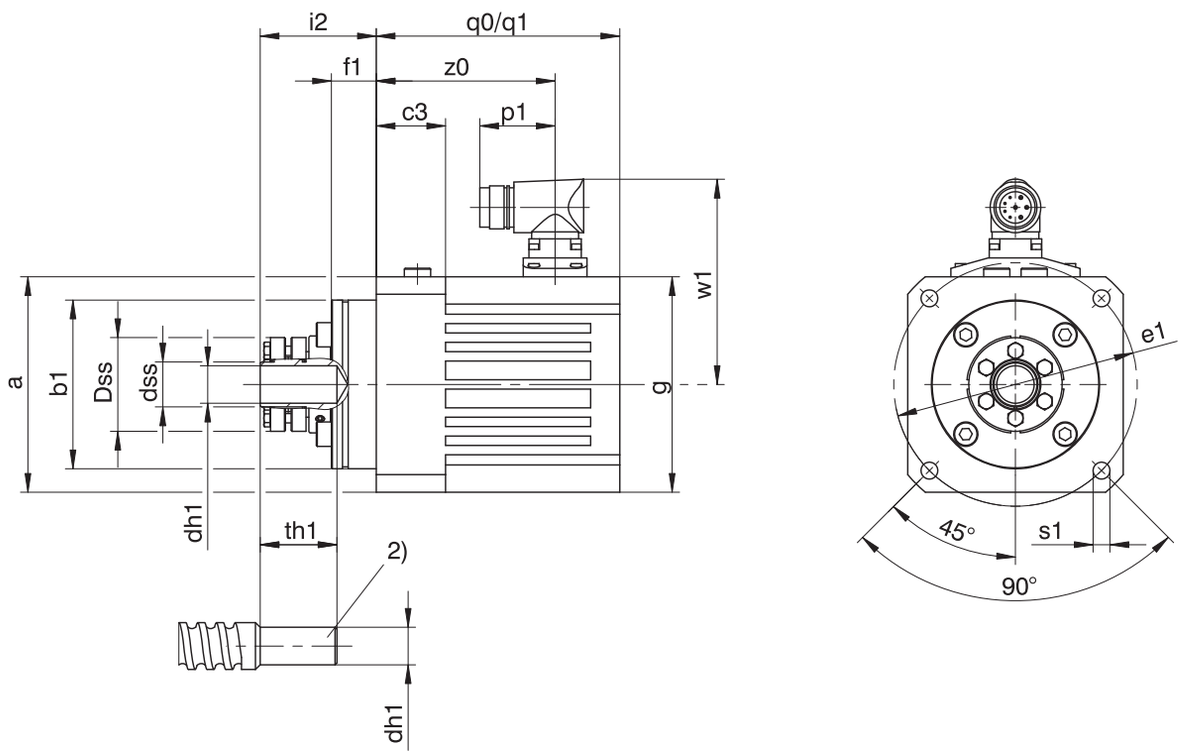

q0 Applies to motors without holding brake

q1 Applies to motors with holding brake

2) Threaded spindle provided by customer

Type	□a	Øb1	c3	Ødh1	Ødss	ØDss	Øe1	f1	□g	i2	p1	q0	q1	Øs1	th1	w1	z0
EZS501U	115	$90_{-0,01}$	37	20_{h6}^{H6}	24_{h7}	50	130	24	115	62.0	40	130	184.5	9	40.5	110	95.5
EZS502U	115	$90_{-0,01}$	37	20_{h6}^{H6}	24_{h7}	50	130	24	115	62.0	40	155	209.5	9	40.5	110	120.5
EZS503U	115	$90_{-0,01}$	37	20_{h6}^{H6}	24_{h7}	50	130	24	115	62.0	40	180	234.5	9	40.5	110	145.5
EZS701U	145	$115_{-0,01}$	46	25_{h6}^{H6}	30_{h7}	60	165	24	145	66.5	40	148	206.7	11	44.5	125	110.2
EZS702U	145	$115_{-0,01}$	46	25_{h6}^{H6}	30_{h7}	60	165	24	145	66.5	40	173	231.7	11	44.5	125	135.2
EZS703U	145	$115_{-0,01}$	46	25_{h6}^{H6}	30_{h7}	60	165	24	145	66.5	40	198	256.7	11	44.5	125	160.2

10.4.2 EZS motors with convection cooling

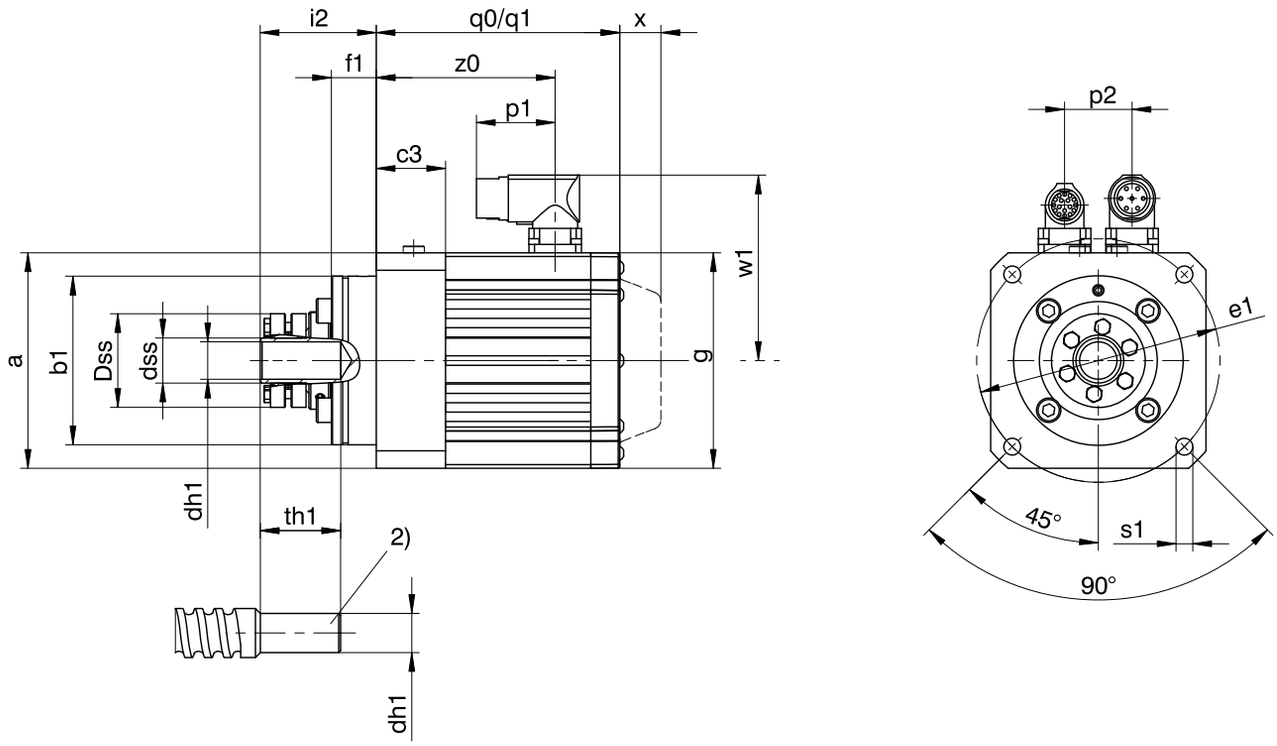

q0	Applies to motors without holding brake	q1	Applies to motors with holding brake
x	Applies to encoders based on an optical measuring method	2)	Threaded spindle provided by customer

Type	□a	Øb1	c3	Ødh1	Ødss	ØDss	Øe1	f1	□g	i2	p1	p2	q0	q1	Øs1	th1	w1	x	z0
EZS501U	115	$90_{-0,01}$	37	20_{h6}^{H6}	24_{h7}	50	130	24	115	62.0	40	36	130	184.5	9	40.5	100	22	95.5
EZS502U	115	$90_{-0,01}$	37	20_{h6}^{H6}	24_{h7}	50	130	24	115	62.0	40	36	155	209.5	9	40.5	100	22	120.5
EZS503U	115	$90_{-0,01}$	37	20_{h6}^{H6}	24_{h7}	50	130	24	115	62.0	40	36	180	234.5	9	40.5	100	22	145.5
EZS701U	145	$115_{-0,01}$	46	25_{h6}^{H6}	30_{h7}	60	165	24	145	66.5	40	42	148	206.7	11	44.5	115	22	110.2
EZS702U	145	$115_{-0,01}$	46	25_{h6}^{H6}	30_{h7}	60	165	24	145	66.5	40	42	173	231.7	11	44.5	115	22	135.2
EZS703U	145	$115_{-0,01}$	46	25_{h6}^{H6}	30_{h7}	60	165	24	145	66.5	40	42	198	256.7	11	44.5	115	22	160.2

10.4.3 EZS motors with forced ventilation (One Cable Solution)

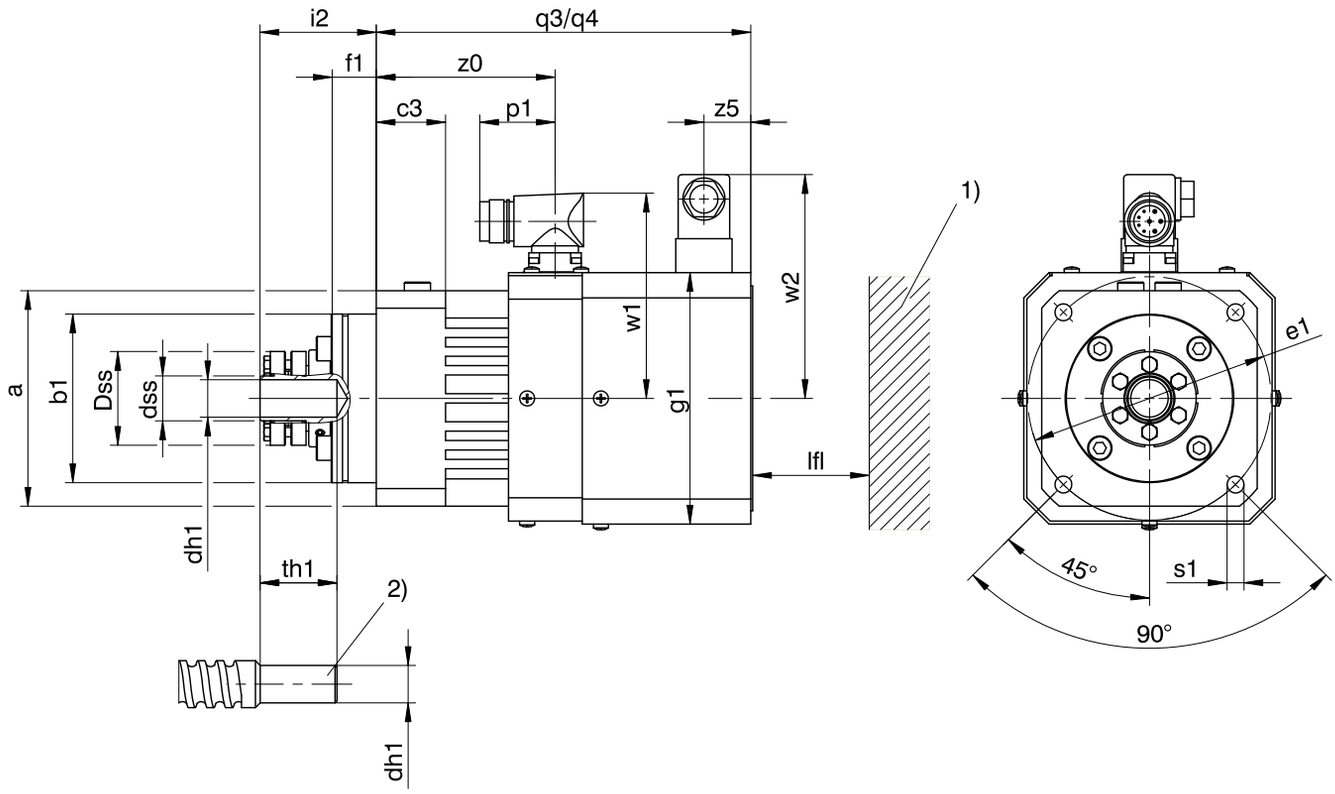

q3	Applies to motors without holding brake	q4	Applies to motors with holding brake
1)	Machine wall	2)	Threaded spindle provided by customer

Type	□a	Øb1	c3	Ødh1	Ødss	ØDss	Øe1	f1	□g1	i2	lfl_{min}	p1	q3	q4	Øs1	th1	w1	w2	z0	z5
EZS501B	115	$90_{-0,01}$	37	20_{h6}^{H6}	24_{h7}	50	130	24	134.5	62.0	20	40	200	265.0	9	40.5	110	120	95.5	25
EZS502B	115	$90_{-0,01}$	37	20_{h6}^{H6}	24_{h7}	50	130	24	134.5	62.0	20	40	225	280.0	9	40.5	110	120	120.5	25
EZS503B	115	$90_{-0,01}$	37	20_{h6}^{H6}	24_{h7}	50	130	24	134.5	62.0	20	40	250	305.0	9	40.5	110	120	145.5	25
EZS701B	145	$115_{-0,01}$	46	25_{h6}^{H6}	30_{h7}	60	165	24	164.5	66.5	30	40	240	298.7	11	44.5	125	134	110.2	40
EZS702B	145	$115_{-0,01}$	46	25_{h6}^{H6}	30_{h7}	60	165	24	164.5	66.5	30	40	265	321.7	11	44.5	125	134	135.2	40
EZS703B	145	$115_{-0,01}$	46	25_{h6}^{H6}	30_{h7}	60	165	24	164.5	66.5	30	40	290	348.7	11	44.5	125	134	160.2	40

10.4.4 EZS motors with forced ventilation

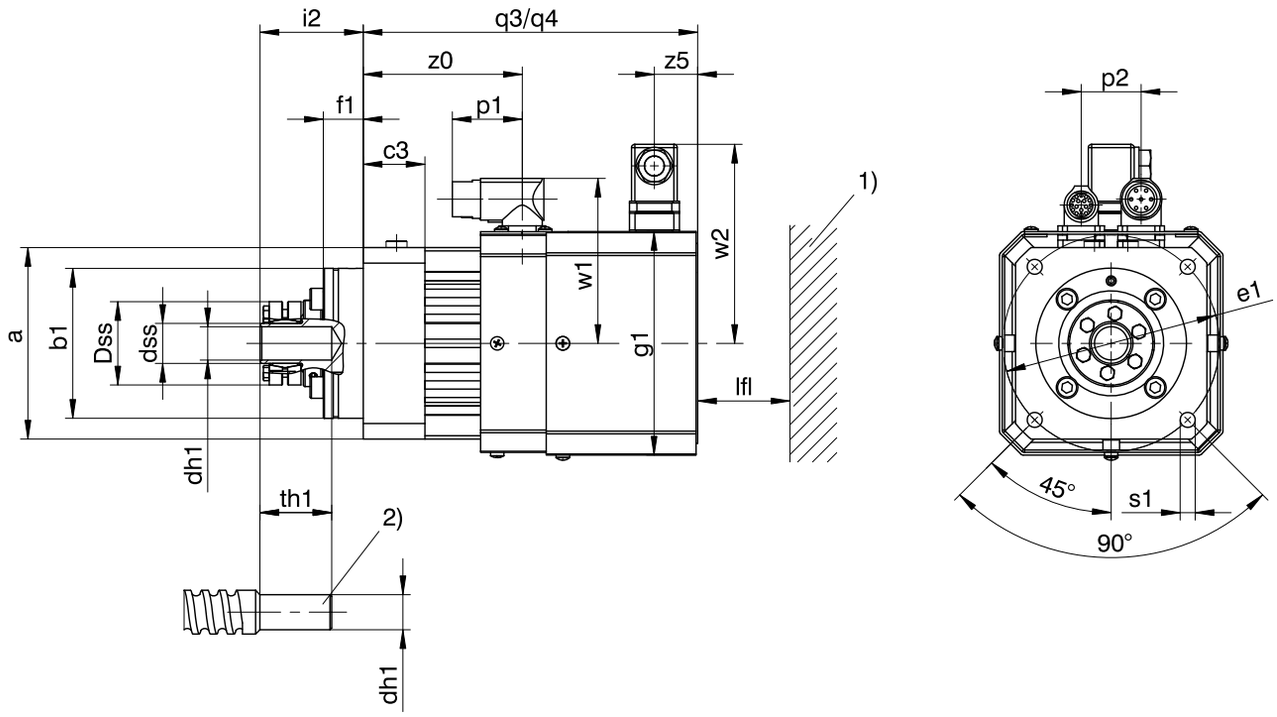

q3	Applies to motors without holding brake	q4	Applies to motors with holding brake
1)	Machine wall	2)	Threaded spindle provided by customer

Type	□a	Øb1	c3	Ødh1	Ødss	ØDss	Øe1	f1	□g1	i2	lfl_{min}	p1	p2	q3	q4	Øs1	th1	w1	w2	z0	z5
EZS501B	115	$90_{-0,01}$	37	20_{h6}^{H6}	24_{h7}	50	130	24	134.5	62.0	20	40	36	200	265.0	9	40.5	100	120	95.5	25
EZS502B	115	$90_{-0,01}$	37	20_{h6}^{H6}	24_{h7}	50	130	24	134.5	62.0	20	40	36	225	280.0	9	40.5	100	120	120.5	25
EZS503B	115	$90_{-0,01}$	37	20_{h6}^{H6}	24_{h7}	50	130	24	134.5	62.0	20	40	36	250	305.0	9	40.5	100	120	145.5	25
EZS701B	145	$115_{-0,01}$	46	25_{h6}^{H6}	30_{h7}	60	165	24	164.5	66.5	30	40	42	240	298.7	11	44.5	115	134	110.2	40
EZS702B	145	$115_{-0,01}$	46	25_{h6}^{H6}	30_{h7}	60	165	24	164.5	66.5	30	40	42	265	321.7	11	44.5	115	134	135.2	40
EZS703B	145	$115_{-0,01}$	46	25_{h6}^{H6}	30_{h7}	60	165	24	164.5	66.5	30	40	42	290	348.7	11	44.5	115	134	160.2	40

10.5 Type designation

Sample code

EZS	5	0	1	U	D	BB	Q7	O	097

Explanation

Code	Designation	Design
EZS	Type	Synchronous servo motor for screw drives
5	Motor size	5 (example)
0	Generation	0
1	Length	1 (example)
U B	Cooling	Convection cooling Forced ventilation
D	Design	Dynamic
BB	Drive controller	SI6 (example)
Q7	Encoder	EnDat 3 EQI 1131 (example)
O P	Brake	Without holding brake Permanent magnet holding brake
097	Voltage constant K_{EM}	97 V/1000 rpm (example)

Notes

- In Chapter [▸ 10.6.5], you can find information about available encoders.
- In Chapter [▸ 10.6.5.6], you can find information about connecting synchronous servo motors to other drive controllers from STOBER.

10.6 Product description

10.6.1 General features

Feature	EZS5	EZS7
Threaded spindle ∅ [mm]	25/32	32/40
Nominal speed n_N [rpm]	3000	3000
Bearing type[1]	INA ZKLF 3590-2Z[2]	INA ZKLF 50115-2Z[3]
Maximum bearing speed n_{la} [rpm]	3800	3000
Axial bearing load rating, dynamic C_{dyn} [N]	41000	46500
Axial rigidity C_{ax} [N/µm]	500	770
Shrink ring type	RINGFEDER RfN 4061 24 × 50	RINGFEDER RfN 4061 30× 60
Torque [Nm] that can be transmitted by the shrink ring	324	514
Axial force $F_{ax,ss}$ [N] that can be transmitted by the shrink ring	32000	41000
Surface pressure on the hub of the shrink ring [N/mm²]	272	228
Pin diameter of the threaded spindle dh1 [mm]	20	25
Protection class	IP40	IP40
Thermal class	155 (F) in accordance with EN 60034-1 (155 °C, heating Δϑ = 100 K)	
Surface[4]	Matte black as per RAL 9005	
Noise level	Limit values in accordance with EN 60034-9	
Cooling	IC 410 convection cooling (IC 416 convection cooling with optional forced ventilation)	

[1] Axial angular contact ball bearing for screw drives, grease-lubricated, can be relubricated
[2] Or comparable products from other providers
[3] Or comparable products from other providers
[4] Repainting the motor will change the thermal properties and therefore the performance limits.

10.6.2 Electrical features

General electrical features of the motor are described in this chapter. Details can be found in the "Selection tables" chapter.

Feature	Description
DC link voltage	DC 540 V (max. 620 V) on STOBER drive controllers
Winding	Three-phase, single-tooth coil design
Circuit	Star, center not led through
Protection class	I (protective grounding) in accordance with EN 61140
Number of pole pairs	7

10.6.3 Ambient conditions

Standard ambient conditions for transport, storage and operation of the motor are described in this chapter.

Feature	Description
Surrounding temperature for transport/storage	−30 °C to +85 °C
Surrounding temperature for operation	−15 °C to +40 °C
Relative humidity	5% to 95%, no condensation
Installation altitude	≤ 1000 m above sea level
Shock load	≤ 50 m/s^2 (5 g), 6 ms in accordance with EN 60068-2-27

Notes

- STOBER synchronous servo motors are not suitable for potentially explosive atmospheres.
- Secure the power cables close to the motor so that vibrations of the cable do not place impermissible loads on the motor plug connector.
- Note that the braking torques of the holding brake (optional) may be reduced by shock loading.
- At operating temperatures below 0 °C, note that the discs of the holding brake (optional) may ice up.

10.6.4 Lubrication of the screw drive

Lubricants that enter into the inside of the motor can impair the function of the holding brake and encoder. Therefore, take the protection class of the synchronous servo motor into account when configuring your screw drive, especially when installing the synchronous servo motor vertically with the A side on top.

For detailed information about lubricating the screw drive, contact your screw drive manufacturer.

10.6.5 Encoders

STOBER synchronous servo motors can be designed with different encoder models. The following chapters include information for choosing the optimal encoder for your application.

10.6.5.1 Encoder measuring method selection tool

The following table offers a selection tool for an encoder measuring method that is optimally suited for your application.

Feature	Absolute encoder		Resolver
Measuring method	Optical	Inductive	Electromagnetic
Temperature resistance	★★☆	★★★	★★★
Vibration strength and shock resistance	★★☆	★★★	★★★
System accuracy	★★★	★★☆	★☆☆
FMA version with fault exclusion for mechanical coupling (option with EnDat interface)	✓	✓	–
Elimination of referencing with multi-turn design (optional)	✓	✓	–
Simple commissioning with electronic nameplate	✓	✓	–
Key: ★☆☆ = satisfactory, ★★☆ = good, ★★★ = very good			

10.6.5.2 Selection tool for EnDat interface

The following table offers a selection tool for the EnDat interface of absolute encoders.

Feature	EnDat 2.1	EnDat 2.2	EnDat 3
Short cycle times	★★☆	★★★	★★★
Transfer of additional information along with the position value	–	✓	✓
Expanded power supply range	★★☆	★★★	★★★
One Cable Solution (OCS)	–	–	✓
Key: ★★☆ = good, ★★★ = very good			

10.6.5.3 EnDat 2 encoders

In this chapter, you can find detailed technical data for encoder models that can be selected with EnDat interface.

Encoders with EnDat 2.2 interface

Encoder model	Code	Measuring method	Recordable revolutions	Resolution	Position values per revolution
EnDat 2.2 EQI 1131	Q6	Inductive	4096	19 bit	524288
EnDat 2.2 EBI 1135	B0	Inductive	65536	18 bit	262144
EnDat 2.2 EQN 1135 FMA	M3	Optical	4096	23 bit	8388608
EnDat 2.2 EQN 1135	Q5	Optical	4096	23 bit	8388608
EnDat 2.2 ECN 1123 FMA	M1	Optical	–	23 bit	8388608
EnDat 2.2 ECN 1123	C7	Optical	–	23 bit	8388608
EnDat 2.2 ECI 1118-G2	C5	Inductive	–	18 bit	262144

Encoders with EnDat 2.1 interface

Encoder model	Code	Measuring method	Recordable revolutions	Resolution	Position values per revolution	Periods per revolution
EnDat 2.1 EQN 1125 FMA	M2	Optical	4096	13 bit	8192	Sin/Cos 512
EnDat 2.1 EQN 1125	Q4	Optical	4096	13 bit	8192	Sin/Cos 512
EnDat 2.1 ECN 1113 FMA	M0	Optical	–	13 bit	8192	Sin/Cos 512
EnDat 2.1 ECN 1113	C6	Optical	–	13 bit	8192	Sin/Cos 512

Notes

- The encoder code is a part of the type designation of the motor.
- FMA = Version with fault exclusion for mechanical coupling.
- The EnDat 2.2 EBI 1135 encoder requires an external buffer battery so that absolute position information is retained after the power supply is turned off (AES option for STOBER drive controllers).
- Multiple revolutions of the motor shaft can be recorded only using multi-turn encoders.

10.6.5.4 EnDat 3 encoders

EnDat 3 is a robust, purely digital protocol that functions with minimal connection lines. EnDat 3 facilitates the One Cable Solution, which allows the connection lines between the encoder and drive controller to be routed along in the motor's power cable.

The One Cable Solution offers the following advantages:

- Significantly reduced wiring effort by eliminating the encoder cable
- For cable lengths up to 50 m, a choke between the drive controller and motor is not necessary
- Advanced safety functions possible (up to SIL2 / category 3, PLd)
- Significantly reduced space requirements by eliminating the encoder plug connector
- Transmission of measured values from the temperature sensor using the EnDat 3 protocol

A motor with the EnDat 3 encoder can be operated only on a SI6 or SC6 drive controller from STOBER.

The EnDat 3 encoder has the following features:

Encoder model	Code	Measuring method	Recordable revolutions	Resolution	Position values per revolution
EnDat 3 EQI 1131	Q7	Inductive	4096	19 bit	524288

10.6.5.5 Resolver

In this chapter, you can find detailed technical data for the resolver that can be installed as an encoder in a STOBER synchronous servo motor.

Feature	Description
Input voltage U_{1eff}	7 V ± 5%
Input frequency f_1	10 kHz
Output voltage $U_{2,S1–S3}$	$K_{tr} \cdot U_{R1–R2} \cdot \cos \theta$
Output voltage $U_{2,S2–S4}$	$K_{tr} \cdot U_{R1–R2} \cdot \sin \theta$
Transformation ratio K_{tr}	0.5 ± 5%
Electrical fault	±10 arcmin

10.6.5.6 Possible combinations with drive controllers

The following table shows the options for combining STOBER drive controllers with selectable encoder models.

Drive controller		**SDS 5000**		**SD6**		**SI6**			**SC6**		
Drive controller code		AA	AC	AD	AE	AP	AQ	**BB**	AU	AV	**BA**
Connection plan ID		442305	442307	442450	442451	442771	442772	**443175**	443052	443053	**443174**
Encoder	**Encoder code**										
EnDat 3 EQI 1131	Q7	–	–	–	–	–	–	✓	–	–	✓
EnDat 2.2 EQI 1131	Q6	✓	–	✓	–	✓	–	–	✓	–	–
EnDat 2.2 EBI 1135	B0	✓	–	✓	–	✓	–	–	✓	–	–
EnDat 2.2 EQN 1135 FMA	M3	✓	–	✓	–	–	–	–	–	–	–
EnDat 2.2 EQN 1135	Q5	✓	–	✓	–	✓	–	–	✓	–	–
EnDat 2.2 ECN 1123 FMA	M1	✓	–	✓	–	–	–	–	–	–	–
EnDat 2.2 ECN 1123	C7	✓	–	✓	–	✓	–	–	✓	–	–
EnDat 2.2 ECI 1118-G2	C5	✓	–	✓	–	✓	–	–	✓	–	–
EnDat 2.1 EQN 1125 FMA	M2	✓	✓	✓	✓	–	–	–	–	–	–
EnDat 2.1 EQN 1125	Q4	✓	✓	✓	✓	–	–	–	–	–	–
EnDat 2.1 ECN 1113 FMA	M0	✓	✓	✓	✓	–	–	–	–	–	–
EnDat 2.1 ECN 1113	C6	✓	✓	✓	✓	–	–	–	–	–	–
Resolver	R0	✓	–	–	✓	–	✓	–	–	✓	–

Notes

- The drive controller and encoder codes are a part of the type designation of the motor (see the "Type designation" chapter).

10.6.6 Temperature sensor

In this chapter, you can find technical data for the temperature sensors that are installed in STOBER synchronous servo motors for implementing thermal winding protection. To prevent damage to the motor, always monitor the temperature sensor with appropriate devices that will turn off the motor if the maximum permitted winding temperature is exceeded.

Some encoders feature integrated temperature monitoring, the warning and switch-off thresholds of which may overlap with the corresponding values set for the temperature sensor in the drive controller. In some cases, this may result in an instance where an encoder with internal temperature monitoring forces the motor to shut down, even before the motor has reached its nominal data.

You can find information about the electrical connection of the temperature sensor in the "Connection method" chapter.

10.6.6.1 PTC thermistor

The PTC thermistor is installed as a standard temperature sensor in STOBER synchronous servo motors.

The PTC thermistor is a triple thermistor in accordance with DIN 44082 that can be used for monitoring the temperature of each winding phase. The resistance values in the following table and curve refer to a single thermistor in accordance with DIN 44081. These values must be multiplied by 3 for a triple thermistor in accordance with DIN 44082.

Feature	Description
Nominal response temperature ϑ_{NAT}	145 °C ± 5 K
Resistance R −20 °C up to ϑ_{NAT} − 20 K	≤ 250 Ω
Resistance R with ϑ_{NAT} − 5 K	≤ 550 Ω
Resistance R with ϑ_{NAT} + 5 K	≥ 1330 Ω
Resistance R with ϑ_{NAT} + 15 K	≥ 4000 Ω
Operating voltage	≤ DC 7.5 V
Thermal response time	< 5 s
Thermal class	155 (F) in accordance with EN 60034-1 (155 °C, heating Δϑ = 100 K)

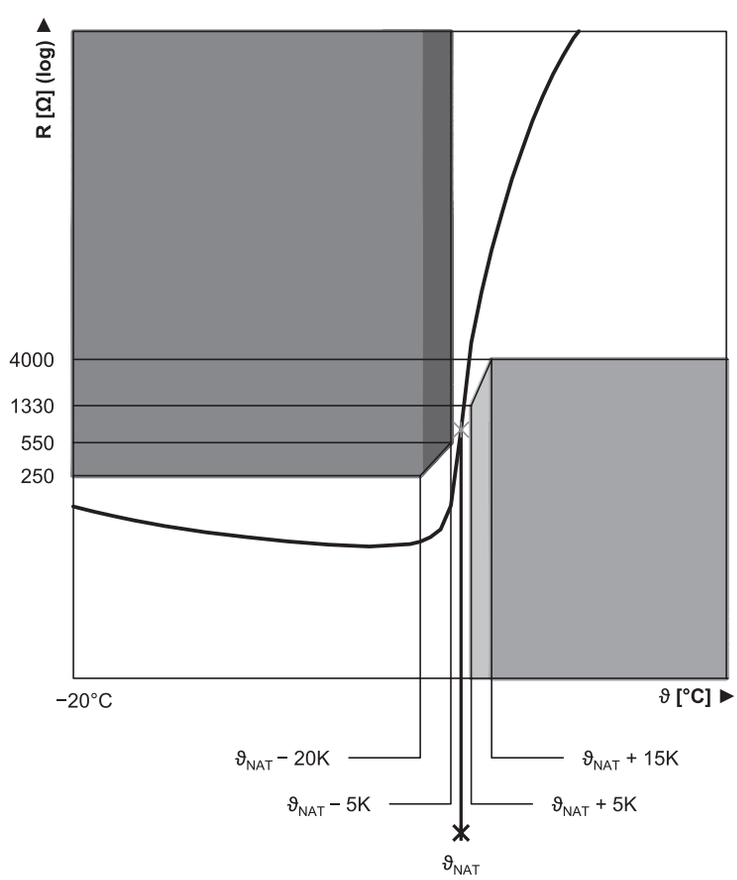

Fig. 2: PTC thermistor curve (single thermistor)

10.6.6.2 Pt1000 temperature sensor

STOBER synchronous servo motors are available in versions with a Pt1000 temperature sensor. The Pt1000 is a temperature-dependent resistor that has a resistance curve with a linear relationship with temperature. As a result, the Pt1000 allows for measurements of the winding temperature. These measurements are limited to one phase of the motor winding, however. In order to adequately protect the motor from exceeding the maximum permitted winding temperature, use a i^2t model in the drive controller to monitor the winding temperature.

Pt1000 temperature sensors can also be used with the One Cable Solution.

Avoid exceeding the specified measurement current so that the measured values are not falsified due to self-heating of the temperature sensor.

Feature	Description
Measurement current (constant)	2 mA
Resistance R for ϑ = 0 °C	1000 Ω
Resistance R for ϑ = 80 °C	1300 Ω
Resistance R for ϑ = 150 °C	1570 Ω

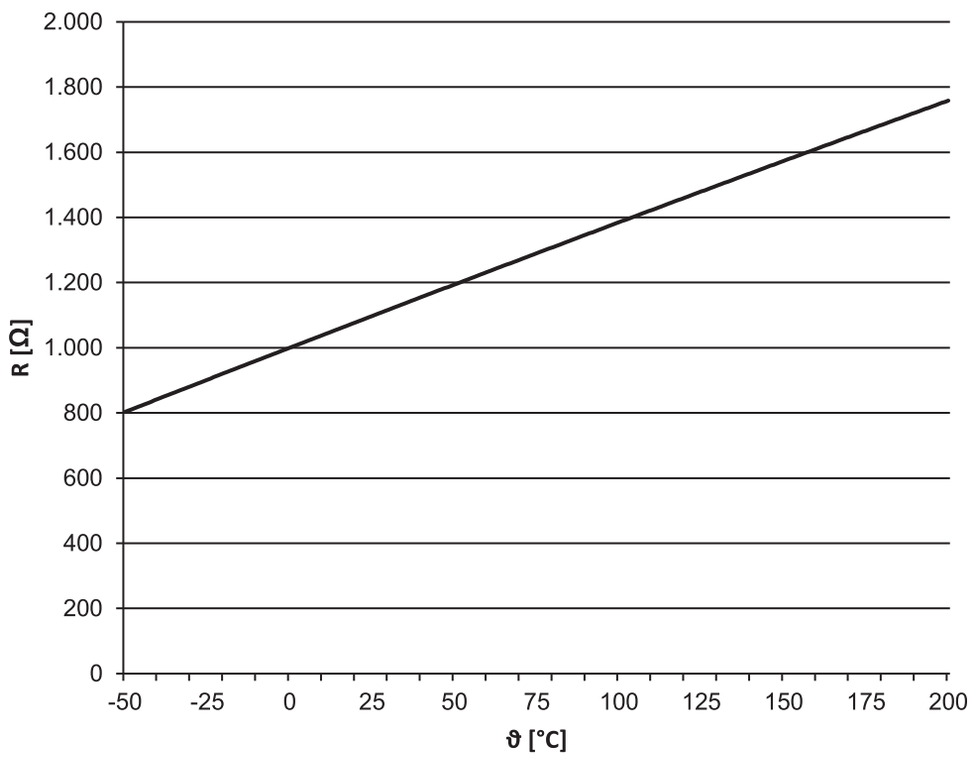

Fig. 3: Pt1000 temperature sensor characteristic curve

10.6.7 Cooling

A synchronous servo motor in the standard version is cooled by convection cooling (IC 410 in accordance with EN 60034-6). The air flowing around the motor is heated by the radiated motor heat and rises. Optionally, forced ventilation can be used to cool the motor.

10.6.7.1 Forced ventilation

STOBER synchronous servo motors offer the option of being cooled with forced ventilation in order to increase performance data while maintaining the same size. Retrofitting with a forced ventilation unit is also possible in order to optimize the drive at a later date. When retrofitting, check whether the conductor cross-section of the power cable of the motor must be increased. Also take into account the dimensions of the forced ventilation unit.

The performance data for motors with forced ventilation can be found in the chapter Selection tables and the dimensions in the chapter Dimensional drawings.

Technical data

Motor	Forced ventilation unit	$U_{N,F}$ [V]	$I_{N,F}$ [V]	$P_{N,F}$ [W]	$q_{v,F}$ [m³/h]	$L_{p(A)}$ [dBA]	m_F [kg]	Protection class
EZS5_B	FL5	230 V ± 5%,	0.10	14	160	45	1.9	IP54
EZS7_B	FL7	50/60 Hz	0.10	14	160	45	2.9	IP54

Terminal assignment for forced ventilation unit plug connectors

Connection diagram	Pin	Connection
	1	L1 (phase)
	2	N (neutral conductor)
	3	
	⏚	Grounding conductor

10.6.8 Holding brake

STOBER synchronous servo motors can be equipped with a backlash-free holding brake using permanent magnets in order to secure the motor shaft when at a standstill. The holding brake engages automatically if the voltage drops.

The holding brake is designed for a high number of operations (B_{10} = 10 million operations, B_{10d} = 20 million operations).

Nominal voltage of permanent magnet holding brake: DC 24 V ± 5%, smoothed.

Observe the following during project configuration:

- The holding brake is designed to keep the motor shaft from moving. Activate braking processes during operation using the corresponding electrical functions of the drive controller. In exceptional circumstances, the holding brake can be used for braking from full speed (following a power failure or when setting up the machine). The maximum permitted work done by friction $W_{B,Rmax/h}$ may not be exceeded.
- Note that the braking torque M_{Bdyn} may initially be up to 50% less when braking from full speed. As a result, the braking effect has a delayed action and braking distances become longer.
- Regularly perform a brake test to ensure the functional safety of the brakes. Details can be found in the documentation of the motor and the drive controller.
- Connect a varistor of type S14 K35 (or comparable) in parallel to the brake coil to protect your machine from switching surges. (Not necessary for connecting the holding brake to STOBER drive controllers of the 5th and 6th generation with a BRS/BRM brake module).
- The holding brake of the motor does not offer adequate safety for persons in the hazardous area of gravity-loaded vertical axes. Therefore take additional measures to minimize risk, e.g. by providing a mechanical substructure for maintenance work.
- Take into consideration voltage losses in the connection cables that connect the voltage source to the holding brake connections.
- The holding torque of the brake can be reduced by shock loading. Information about shock loading can be found in the "Ambient conditions" chapter.
- At operating temperatures from −15 °C to 0 °C, a cold holding brake in the released state may cause operating noises. As the temperature of the holding brake increases, these noises decrease such that operating noises are not heard when using holding brake at operating temperature in the released state.

Calculation of work done by friction per braking process

$$W_{B,R/B} = \frac{J_{tot} \cdot n^2}{182.4} \cdot \frac{M_{Bdyn}}{M_{Bdyn} \pm M_L}, \; M_{Bdyn} > M_L$$

The sign of M_L is positive if the movement runs vertically upwards or horizontally and it is negative if the movement runs vertically down.

Calculation of the stop time

$$t_{dec} = 2.66 \cdot t_{1B} + \frac{n \cdot J_{tot}}{9.55 \cdot M_{Bdyn}}$$

Switching behavior

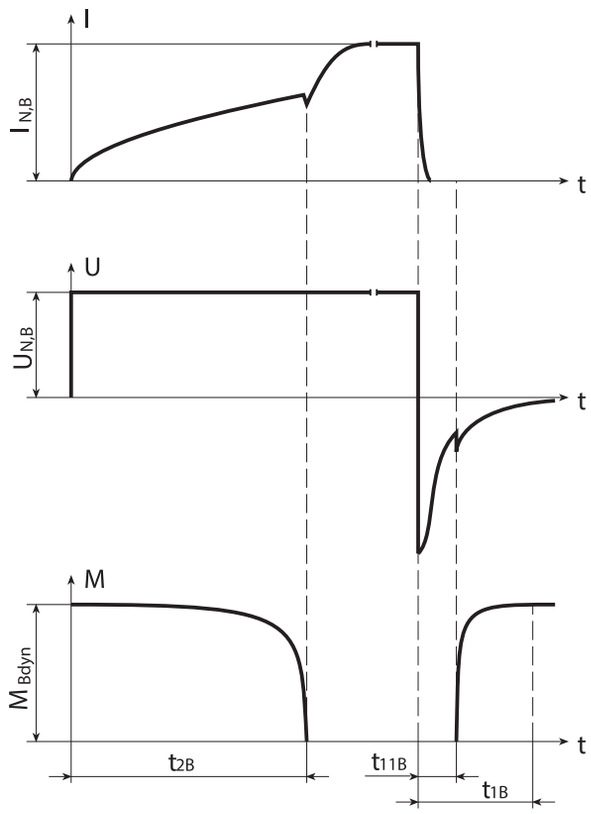

Fig. 4: Holding brake – Switching behavior

Technical data

Type	M_{Bstat} [Nm]	M_{Bdyn} [Nm]	$I_{N,B}$ [A]	$W_{B,Rmax/h}$ [kJ/h]	N_{Bstop}	J_{Bstop} [kgcm²]	$W_{B,Rlim}$ [kJ]	t_{2B} [ms]	t_{11B} [ms]	t_{1B} [ms]	$x_{B,N}$ [mm]	ΔJ_B [kgcm²]	Δm_B [kg]
EZS501	8.0	7.0	0.75	8.5	4300	14.1	300	40	2.0	20	0.3	0.550	1.19
EZS502	8.0	7.0	0.75	8.5	3200	18.7	300	40	2.0	20	0.3	0.550	1.19
EZS503	15	12	1.0	11.0	4300	25.6	550	60	5.0	30	0.3	1.700	1.62
EZS701	15	12	1.0	11.0	2500	44.0	550	60	5.0	30	0.3	1.700	1.94
EZS702	15	12	1.0	11.0	2000	54.6	550	60	5.0	30	0.3	1.700	1.94
EZS703	32	28	1.1	25.0	3800	72.8	1400	100	5.0	25	0.4	5.600	2.81

10.6.9 Connection method

The following chapters describe the connection technology of STOBER synchronous servo motors in the standard version on STOBER drive controllers. You can find further information relating to the drive controller type that was specified in your order in the connection plan that is delivered with every synchronous servo motor.

10.6.9.1 Connection of the motor housing to the grounding conductor system

Connect the motor housing to the grounding conductor system of the machine in order to prevent personal injury and faulty triggering of residual current protective devices.

All attachment parts required for the connection of the grounding conductor to the motor housing are delivered with the motor. The grounding screw of the motor is identified with the symbol ⏚ in accordance with IEC 60417-DB. The cross-section of the grounding conductor has to be at least as large as the cross-section of the lines in the power connection.

10.6.9.2 Plug connectors (One Cable Solution)

In the One Cable Solution design, the power and encoder lines are connected using a shared plug connector.

For motors with forced ventilation, avoid collisions between the motor connection cables and the plug connector of the forced ventilation unit. In the event of a collision, turn the motor plug connectors accordingly. Details regarding the position of the plug connector for the forced ventilation unit can be found in the "Dimensional drawings" chapter.

The figures represent the position of the plug connectors upon delivery.

Turning ranges of plug connectors

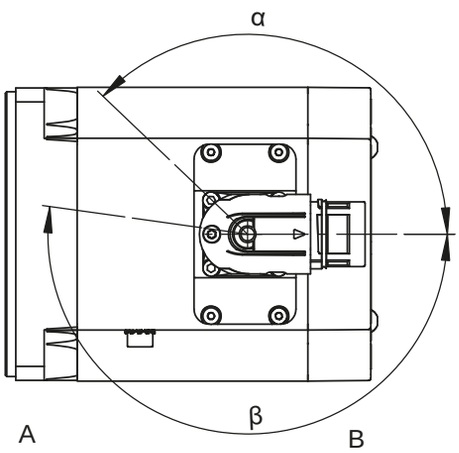

A	Attachment or output side of the motor	B	Rear side of the motor

Motor type	Size	Connection	Turning range	
			α	β
EZS	con.23	Quick lock	130°	190°

Notes

- The number after "con." indicates the approximate external thread diameter of the plug connector in mm (for example, con.23 designates a plug connector with an external thread diameter of about 23 mm).

10.6.9.3 Terminal assignment for plug connectors (One Cable Solution)

In the One Cable Solution design, the power and encoder lines are connected using a shared plug connector.

The temperature sensor of the motor is connected to the encoder internally. The measured values from the temperature sensor are transmitted via the EnDat 3 protocol of the encoder.

The colors of the connecting wires inside the motor are specified in accordance with IEC 60757.

Plug connector size con.23

Connection diagram	Pin	Connection	Color
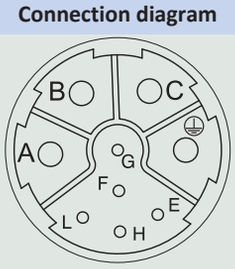	A	U phase	BK
	B	V phase	BU
	C	W phase	RD
	E	P_SD –	YE
	F		
	G	Brake +	
	H	P_SD +	VT
	L	Brake –	
	⏚	Grounding conductor	GNYE

10.6.9.4 Plug connectors

STOBER synchronous servo motors are equipped with twistable quick-lock plug connectors in the standard version. Details can be found in this chapter.

For motors with forced ventilation, avoid collisions between the motor connection cables and the plug connector of the forced ventilation unit. In the event of a collision, turn the motor plug connectors accordingly. Details regarding the position of the plug connector for the forced ventilation unit can be found in the "Dimensional drawings" chapter.

The figures represent the position of the plug connectors upon delivery.

Turning ranges of plug connectors

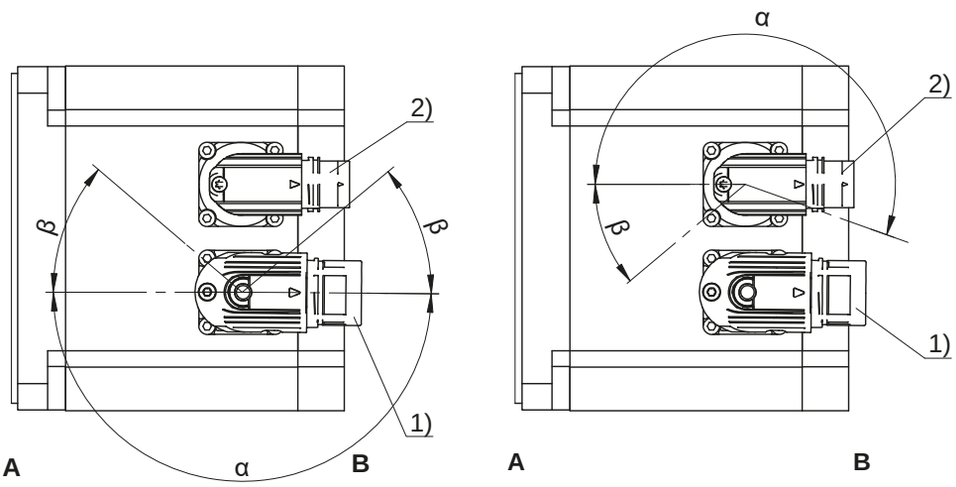

1	Power plug connector	2	Encoder plug connector
A	Attachment or output side of the motor	B	Rear side of the motor

Power plug connector features

Motor type	Size	Connection	Turning range	
			α	β
EZS	con.23	Quick lock	180°	40°

Encoder plug connector features

Motor type	Size	Connection	Turning range	
			α	β
EZS	con.17	Quick lock	195°	35°

Notes

- The number after "con." indicates the approximate external thread diameter of the plug connector in mm (for example, con.23 designates a plug connector with an external thread diameter of about 23 mm).
- In turning range β, the power or encoder plug connectors can be turned only if doing so does not cause them to collide.

10.6.9.5 Connection assignment of the power plug connector

The colors of the connecting wires inside the motor are specified in accordance with IEC 60757.

Plug connector size con.23

Connection diagram	Pin	Connection	Color
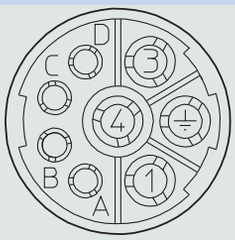	1	U phase	BK
	3	V phase	BU
	4	W phase	RD
	A	Brake +	RD
	B	Brake –	BK
	C	Temperature sensor +	
	D	Temperature sensor –	
	⏚	Grounding conductor	GNYE

10.6.9.6 Connection assignment of the encoder plug connector

The size and connection assignment of the encoder plug connectors depend on the model of encoder installed and the size of the motor. The colors of the connecting wires inside the motor are specified in accordance with IEC 60757.

EnDat 2.1/2.2 digital encoders, plug connector size con.17

Connection diagram	Pin	Connection	Color
	1	Clock +	VT
	2	Up sense	BNGN
	3		
	4		
	5	Data –	PK
	6	Data +	GY
	7		
	8	Clock –	YE
	9		
	10	0 V GND	WHGN
	11		
	12	Up +	BNGN
	Pin 2 is connected to pin 12 in the plug connector		

EnDat 2.2 digital encoder with battery buffering, plug connector size con.17

Connection diagram	Pin	Connection	Color
	1	Clock +	VT
	2	UBatt +	BU
	3	UBatt –	WH
	4		
	5	Data –	PK
	6	Data +	GY
	7		
	8	Clock –	YE
	9		
	10	0 V GND	WHGN
	11		
	12	Up +	BNGN
	UBatt+ = DC 3.6 V for encoder model EBI in combination with the AES option of STOBER drive controllers		

EnDat 2.1 encoder with sin/cos incremental signals, plug connector size con.17

Connection diagram	Pin	Connection	Color
	1	Up sense	BU
	2		
	3		
	4	0 V sense	WH
	5		
	6		
	7	Up +	BNGN
	8	Clock +	VT
	9	Clock –	YE
	10	0 V GND	WHGN
	11		
	12	B + (Sin +)	BUBK
	13	B – (Sin –)	RDBK
	14	Data +	GY
	15	A + (Cos +)	GNBK
	16	A – (Cos –)	YEBK
	17	Data –	PK

Resolver, plug connector size con.17

Connection diagram	Pin	Connection	Color
	1	S3 Cos +	BK
	2	S1 Cos –	RD
	3	S4 Sin +	BU
	4	S2 Sin –	YE
	5		
	6		
	7	R2 Ref +	YEWH/BKWH[5]
	8	R1 Ref –	RDWH
	9		
	10		
	11		
	12		

10.7 Project configuration

Project your drives using our SERVOsoft designing software. Download SERVOsoft for free at https://www.stoeber.de/en/ServoSoft.

Observe the limit conditions in this chapter to ensure a safe design for your drives.

An explanation of the formula symbols can be found in Chapter Symbols in formulas.

The formula symbols for values actually present in the application are marked with *.

10.7.1 Design of the screw drive

You can use the information below to select a suitable synchronous servo motor for your screw drive. For detailed design information on the screw drive, please contact the screw drive manufacturer.

Axial velocity

The axial velocity of a screw drive can be calculated as follows:

$$v_{ax} = \frac{n_{mot} \cdot P_{st}}{60}$$

The following diagram represents the characteristic curves of screw drives with common pitches that can be implemented with STOBER synchronous servo motors for screw drives.

[5] (depending on the manufacturer of the resolver)

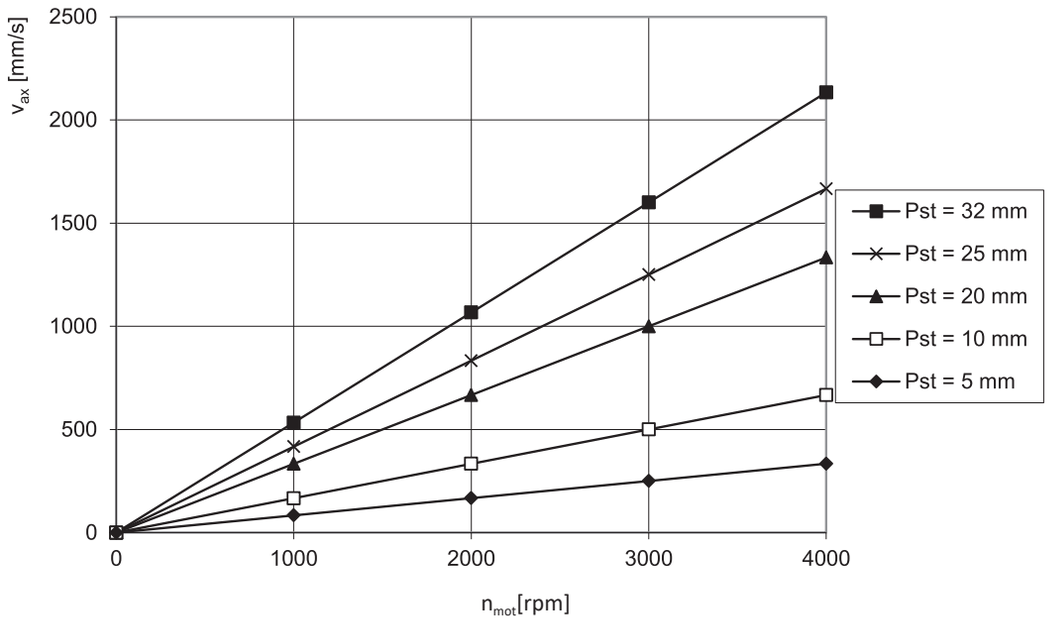

Axial force

The axial force of a screw drive can be calculated as follows:

$$F_{ax} = \frac{2000 \cdot M \cdot \pi \cdot \eta_{gt}}{P_{st}}$$

With a spindle pitch P_{st} = 5, the shrink ring between the motor shaft and threaded spindle can be overloaded when using the maximum torque of EZ502, EZ503, EZ702 or EZ703 motors. To prevent this, the following condition for the maximum permitted axial force F_{ax} must be observed in these application cases. Values for $F_{ax,ss}$ and dh1 can be found in the chapter General features. For more details on the shrink ring, contact the manufacturer Ringfeder.

$$F_{ax} \leq \frac{F_{ax,ss}}{1 + \frac{P_{st}}{\pi \cdot \eta_{gt} \cdot dh1}}$$

You can use the following table to select a motor type / screw drive pitch combination. The axial forces in the table are calculated for M_0 and η_{gt} = 0.9.

	M_0	F_{ax0} P_{st}=5	F_{ax0} P_{st}=10	F_{ax0} P_{st}=15	F_{ax0} P_{st}=20	F_{ax0} P_{st}=25	F_{ax0} P_{st}=32
	[Nm]	[N]	[N]	[N]	[N]	[N]	[N]
EZS501U	4.3	4863	2432	1621	1216	973	760
EZS501B	5.5	6164	3082	2055	1541	1233	963
EZS502U	7.6	8539	4269	2846	2135	1708	1334
EZS502B	10.9	12271	6136	4090	3068	2454	1917
EZS503U	10.7	12045	6022	4015	3011	2409	1882
EZS503B	15.6	17587	8793	5862	4397	3517	2748
EZS701U	7.7	8652	4326	2884	2163	1730	1352
EZS701B	10.2	11479	5740	3826	2870	2296	1794
EZS702U	13.5	15268	7634	5089	3817	3054	2386
EZS702B	19.0	21432	10716	7144	5358	4286	3349
EZS703U	19.7	22280	11140	7427	5570	4456	3481
EZS703B	27.7	31271	15636	10424	7818	6254	4886

If the synchronous servo motor at absolute standstill (n_{mot}=0) must hold the load using its torque, the following formula defines the permitted axial force:

$$F_{ax0,abs} \leq 0.6 \cdot \frac{2000 \cdot M_0 \cdot \pi \cdot \eta_{gt}}{P_{st}}$$

10.7.2 Calculation of the operating point

In this chapter, you can find information needed to calculate the operating point.

The following calculations refer to a representation of the power delivered at the motor shaft based on the following example:

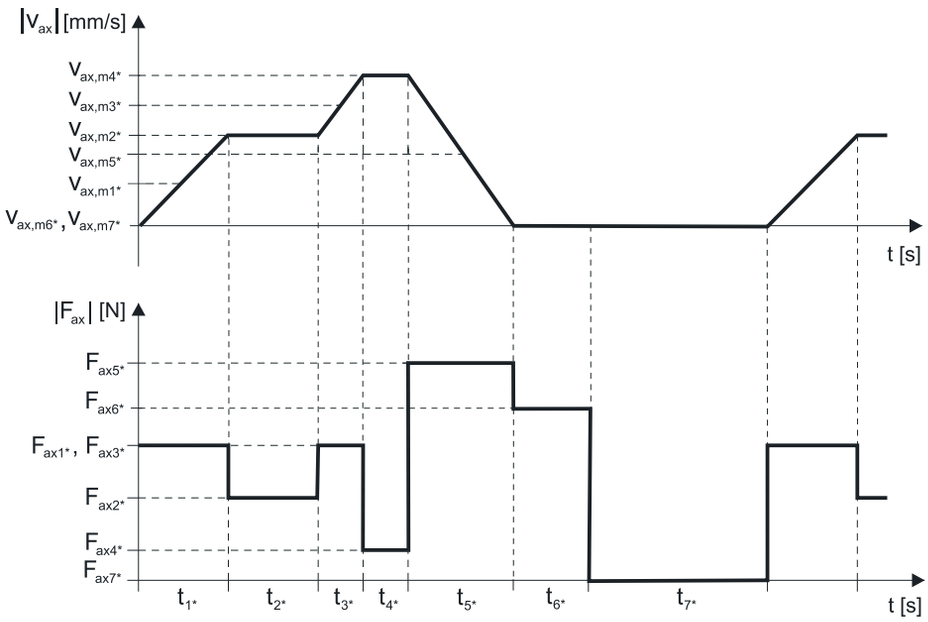

Calculation of the actual average axial velocity

$$v_{ax,m*} = \frac{|v_{ax,m1*}| \cdot t_{1*} + \ldots + |v_{ax,mn*}| \cdot t_{n*}}{t_{1*} + \ldots + t_{n*}}$$

If $t_{1*} + \ldots + t_{6*} \geq 6$ min, determine $v_{ax,m*}$ without the rest phase t_{7*}.

Calculation of the actual average speed

$$n_{m*} = \frac{v_{ax,m*} \cdot 60}{P_{st}}$$

Check the condition $n_{m*} \leq n_N$ and adjust the parameters as needed.

Calculation of the actual effective axial force

$$F_{ax,eff*} = \sqrt{\frac{t_{1*} \cdot F_{ax1*}^{\ 2} + \ldots + t_{n*} \cdot F_{ax,n*}^{\ 2}}{t_{1*} + \ldots + t_{n*}}}$$

Calculation of the actual effective torque

$$M_{eff*} = \frac{F_{ax,eff*} \cdot P_{st}}{2000 \cdot \pi \cdot \eta_{gt}}$$

You can find the value for the torque of the motor at operating point M_{op} with the determined average input speed n_{m*} in the motor curve in Chapter [▶ 9.3]. In doing so, keep the size and cooling type of the motor in mind. The figure below shows an example of reading the torque M_{op} of a motor with convection cooling at the operating point.

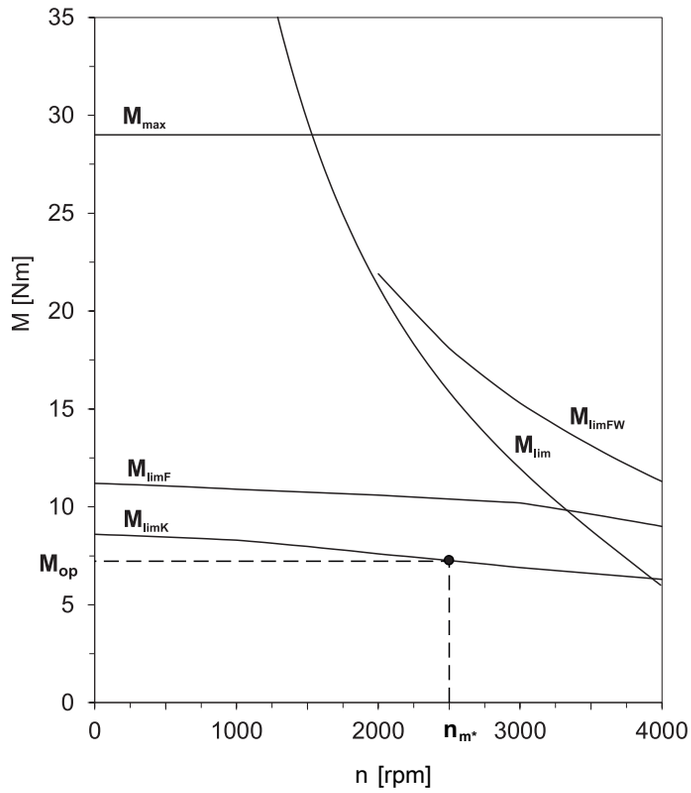

Check the condition: $M_{eff*} \leq M_{op}$ and adjust the parameters as needed.

10.7.3 Calculation of the bearing service life

The service life of the axial angular contact ball bearing of a STOBER synchronous servo motor for screw drives is generally longer than the service life of the screw drive bearing.

You can calculate the service life of the axial angular contact ball bearing as follows (the value for C_{dyn} can be found in the "General features" chapter):

$$L_{10} = \left(\frac{C_{dyn}}{F_{ax,eff*}} \right)^3 \cdot 10^6$$

The following diagram shows the bearing service life L_{10}.

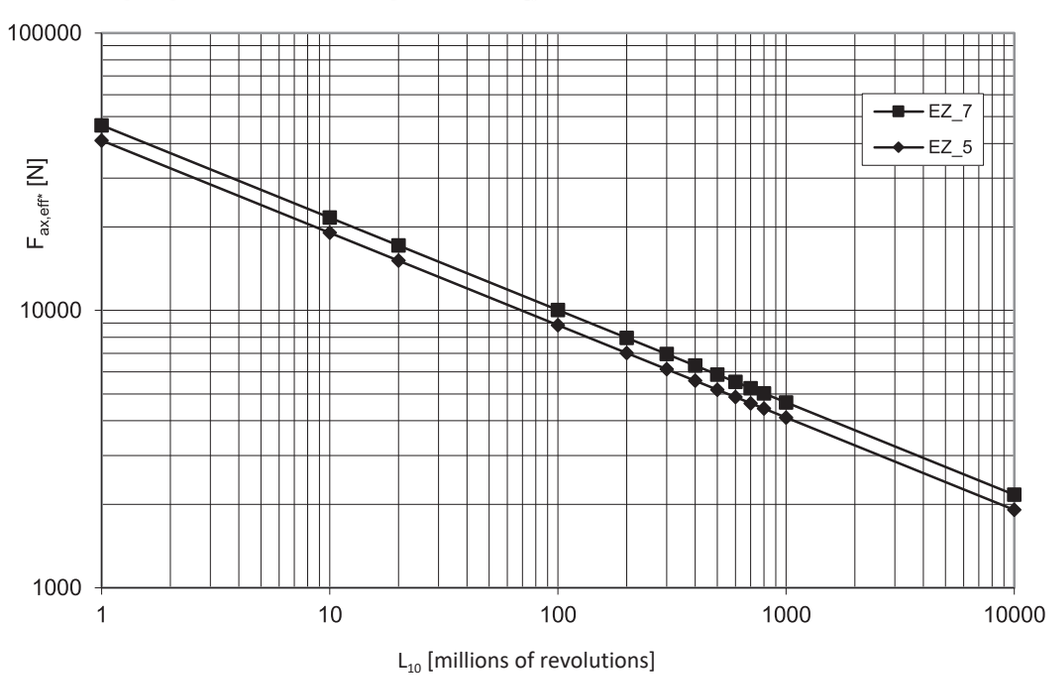

$$L_{10h} = \frac{L_{10}}{n_{m*} \cdot 60}$$

10.8 Further information

10.8.1 Directives and standards

STOBER synchronous servo motors meet the requirements of the following directives and standards:

- (Low Voltage) Directive 2014/35/EU
- EN 60034-1:2010 + Cor.:2010
- EN 60034-5:2001 + A1:2007
- EN 60034-6:1993

10.8.2 Identifiers and test symbols

STOBER synchronous servo motors have the following identifiers and test symbols:

CE mark: The product meets the requirements of EU directives.

cURus test symbol "Servo and Stepper Motors – Component"; registered under UL number E488992 with Underwriters Laboratories USA (optional).

10.8.3 Additional documentation

Additional documentation related to the product can be found at
http://www.stoeber.de/en/downloads/

Enter the ID of the documentation in the Search... field.

Documentation	ID
Operating manual for EZ synchronous servo motors	443032_en

11 Close to customers around the world

We offer you committed, expert advice and support and are available around the clock if service is required:

- 4 sales centers in Germany
- Worldwide presence in over 40 countries
- STOBER SERVICE NETWORK with over 80 service partners worldwide

Germany

STÖBER Antriebstechnik GmbH + Co. KG

Kieselbronner Strasse 12

75177 Pforzheim

Phone: +49 7231 582-0

sales@stoeber.de

www.stober.com

Service hotline: +49 7231 582-3000

Subsidiaries

STOBER AUSTRIA www.stoeber.at Phone +43 7613 7600-0 sales@stoeber.at	**STOBER SOUTH EAST ASIA** www.stober.sg sales@stober.sg
STOBER CHINA www.stoeber.cn Phone +86 512 5320 8850 sales@stoeber.cn	**STOBER SWITZERLAND** www.stoeber.ch Phone +41 56 496 96 50 sales@stoeber.ch
STOBER FRANCE www.stober.fr Phone +33 4 78.98.91.80 sales@stober.fr	**STOBER TAIWAN** www.stober.tw Phone +886 4 2358 6089 sales@stober.tw
STOBER ITALY www.stober.it Phone +39 02 93909570 sales@stober.it	**STOBER TURKEY** www.stober.com Phone +90 216 510 2290 sales-turkey@stober.com
STOBER JAPAN www.stober.co.jp Phone +81 3 5395 678 8 sales@stober.co.jp	**STOBER UNITED KINGDOM** www.stober.co.uk Phone +44 1543 458 858 sales@stober.co.uk
STOBER USA www.stober.com Phone +1 606 759 5090 sales@stober.com	

12 Appendix

Table of contents

12.1 Symbols in formulas 294

12.2 Trademarks 297

12.3 Sales terms and delivery conditions 297

12.4 Publication details 297

12.1 Symbols in formulas

The formula symbols for values actually present in the application are marked with *.

Symbol	Unit	Explanation
B_{10}	–	Number of cycles after which 10% of components have failed
B_{10D}	–	Number of cycles until 10% of components have failed dangerously
C_{dyn}	N	Dynamic bearing load rating
C_{maxPU}	F	Maximum charging capacity of the power unit
$C_{N,PU}$	F	Nominal charging capacity of the power unit
C_{PU}	F	Self-capacitance of the power unit
D_{IA}	%	Reduction in the nominal current depending on the installation altitude
D_T	%	Reduction in the nominal current depending on the surrounding temperature
ΔJ_B	$kgcm^2$	Additive mass moment of inertia of a motor with brake
Δm_B	kg	Additive weight of a motor with brake
ED_{10}	%	Duty cycle based on 10 minutes
η_{gt}	%	Efficiency of the screw drive
f_{2PU}	Hz	Output frequency of the power unit
F_{ax}	N	Permitted axial force on the output
F_{ax0}	N	Permitted axial force when the motor is at a standstill for holding the load using the motor torque
$F_{ax1*} – F_{axn*}$	N	Actual axial force in the respective time segment
F_{ax100}	N	Permitted axial force on the output for $n_{m*} \leq 100$ rpm
F_{ax300}	N	Permitted axial force on the output for $n_{m*} \leq 300$ rpm
$F_{ax,eff*}$	N	Actual effective axial force on the output
$F_{ax,ss}$	N	Axial force that can be transmitted by the shrink ring
f_N	Hz	Rotating magnetic field frequency at nominal speed
$f_{PWM,PU}$	Hz	Frequency of the pulse width modulation of the power unit
F_{rad}	N	Permitted radial force on the output
F_{rad100}	N	Permitted radial force on the output for $n_{m*} \leq 100$ rpm
F_{rad300}	N	Permitted radial force on the output for $n_{m*} \leq 300$ rpm
H	m	Installation altitude above sea level
I_0	A	Stall current
I_{1maxCU}	A	Maximum input current of the control unit
I_{1maxPU}	A	Maximum input current of the power unit
$I_{1N,PU}$	A	Nominal input current of the power unit
I_{2maxPU}	A	Maximum output current of the power unit
$I_{2N,PU}$	A	Nominal output current of the power unit
$I_{2N,PU(red)}$	A	Reduced nominal output current of the power unit
$I_{2PU(A)}$	A	Output current of the power unit for axis A
$I_{2PU(B)}$	A	Output current of the power unit for axis B
I_{max}	A	Maximum current
I_N	A	Nominal current
$I_{N,B}$	A	Nominal current of the brake at 20 °C
$I_{N,F}$	A	Nominal current of the forced ventilation unit
$I_{N,MF}$	A	Nominal current of the choke or motor filter
J_{Bstop}	$kgcm^2$	Reference mass moment of inertia when braking from full speed: $J_{Bstop} = J_{dyn} \times 2$
J_{dyn}	$kgcm^2$	Mass moment of inertia of a motor in dynamic operation
J_{tot}	$kgcm^2$	Total mass moment of inertia (based on the motor shaft)
K_{EM}	V/1000 rpm	Voltage constant: peak value of the induced voltage between the phases U, V, W of the motor at operating temperature at a speed of 1000 rpm
K_H	–	Derating factor for installation altitude
K_{M0}	Nm/A	Torque constant: ratio of the stall torque and frictional torque to the stall current; $K_{M0} = (M_0 + M_R) / I_0$ (tolerance ±10%)
$K_{M,N}$	Nm/A	Torque constant: ratio of the nominal torque M_N to the nominal current I_N; $K_{M,N} = M_N / I_N$ (tolerance ±10%)
$K_{mot,th}$	–	Factor for determining the thermal limit torque
K_ϑ	–	Derating factor for surrounding temperature

Symbol	Unit	Explanation
l	mm	Length of the output shaft
L_{10}	–	Nominal bearing service life for a survival probability of 90% in 10^6 rollovers
L_{10h}	h	Bearing service life
$L_{pA,F}$	dBA	Noise level of the forced ventilation unit in the optimal operating range
L_{U-V}	mH	Winding inductance of a motor between two phases (determined in a resonant circuit)
m	kg	Weight (for gear units without lubricant)
M_0	Nm	Stall torque: The continuous torque the motor is able to deliver at a speed of 10 rpm (tolerance ±5%)
M_{Bdyn}	Nm	Dynamic braking torque at 100 °C (Tolerance +40%, −20%)
M_{Bstat}	Nm	Static braking torque of the motor brake at 100 °C (tolerance +40%, −20%)
m_{dyn}	kg	Weight of a motor in dynamic operation
M_{eff*}	Nm	Actual effective torque of the motor
m_F	kg	Weight of the forced ventilation unit
M_k	Nm	Permitted tilting torque on the output
M_{k100}	Nm	Permitted tilting torque on the output for $n_{m*} \leq 100$ rpm
M_{k300}	Nm	Permitted tilting torque on the output for $n_{m*} \leq 300$ rpm
M_L	Nm	Load torque
M_{lim}	Nm	Torque limit without compensating for field weakening
M_{limF}	Nm	Torque limit of the motor with forced ventilation
M_{limFW}	Nm	Torque limit with compensation for field weakening (applies to operation on STOBER drive controllers only)
M_{limK}	Nm	Torque limit of the motor with convection cooling
M_{max}	Nm	Maximum torque: the maximum permitted torque the motor is able to deliver over a short period (when accelerating or decelerating) (tolerance ±10%)
M_{n*}	Nm	Actual torque of the motor in the n-th time segment
M_N	Nm	Nominal torque: the maximum torque of a motor in S1 mode at nominal speed n_N (tolerance ±5%)
		You can calculate other torque values as follows: $M_{N*} = K_{M0} \cdot I^* - M_R$.
M_{Nred}	Nm	Reduced nominal torque of the motor
M_{op}	Nm	Torque of motor at the operating point from the motor characteristic curve at n_{1m*}
M_R	Nm	Frictional torque (of the bearings and seals) of a motor at winding temperature $\Delta\vartheta$ = 100 K
n	rpm	Speed
n_{1m*}	rpm	Actual average input speed
n_{1max}	rpm	Maximum permitted input speed
N_{Bstop}	–	Permitted number of braking processes from full speed (n = 3000 rpm) with J_{Bstop} (M_L = 0). The following applies if the values of n and J_{Bstop} differ: $N_{Bstop} = W_{B,Rlim} / W_{B,R/B}$.
n_{m*}	rpm	Actual average motor speed
$n_{m,n*}$	rpm	Actual average speed of the motor in the n-th time segment
n_{mot}	rpm	Speed of the motor
n_N	rpm	Nominal speed: The speed for which the nominal torque M_N is specified
p	–	Number of pole pairs
P_{effRB}	W	Effective power at the external braking resistor
P_{maxRB}	W	Maximum power at the external braking resistor
P_N	kW	Nominal power: the power the motor is able to deliver long term in S1 mode at the nominal point (tolerance ±5 %)
$P_{N,F}$	W	Nominal output of the forced ventilation unit
$P_{N,PU}$	W	Nominal power of the power unit
P_{st}	mm	Pitch of the screw drive
R_{U-V}	Ω	Winding resistance of a motor between two phases at a winding temperature of 20 °C
P_V	W	Power loss
$P_{V,CU}$	W	Power loss of the control unit
q_{vF}	m^3/h	Delivery capacity of the forced ventilation unit in open air
R_{2minRB}	Ω	Minimum resistance of the external braking resistor

Symbol	Unit	Explanation
R_{intRB}	Ω	Resistance of the internal braking resistor
$\vartheta_{amb,max}$	°C	Maximum surrounding temperature
t	s	Time
t_{1B}	ms	Linking time: time from when the current is turned off until the nominal braking torque is reached
t_{11B}	ms	Response delay: time from when the current is turned off until the torque increases
t_{2B}	ms	Disengagement time: time from when the current is turned on until the torque begins to drop
t_{dec}	ms	Stop time
T_{el}	ms	Electrical time constant: ratio of the winding inductance to the winding resistance of a motor: $T_{el} = L_{U-V} / R_{U-V}$
t_{n*}	s	Duration of the n-th time segment
τ_{th}	°C	Thermal time constant
ϑ_{amb}	°C	Surrounding temperature
U_{1CU}	V	Input voltage of the control unit
U_{1PU}	V	Input voltage of the power unit
U_{2PU}	V	Output voltage of the power unit
U_{max}	V	Maximum voltage
$U_{N,B}$	V	Nominal voltage of brake
$U_{N,F}$	V	Nominal voltage of the forced ventilation unit
U_{offCH}	V	Switch-off threshold of the brake chopper
U_{onCH}	V	On limit of the brake chopper
U_{ZK}	V	DC link voltage: characteristic value of a drive controller
v_{ax}	mm/s	Axial velocity
$v_{ax,m*}$	mm/s	Actual average axial velocity
$v_{ax,m1*} – v_{ax,mn*}$	mm/s	Actual average axial velocity in the respective time segment
$W_{B,R/B}$	J	Work done by friction for braking
$W_{B,Rlim}$	J	Work done by friction until wear limit is reached
$W_{B,Rmax/h}$	J/h	Maximum permitted work done by friction per hour with individual braking
x_2	mm	Distance of the shaft shoulder to the force application point
$x_{B,N}$	mm	Nominal air gap of brake
y_2	mm	Distance of the shaft axis to the axial force application point
z_2	mm	Distance of the shaft shoulder to the middle of the output bearing

12.2 Trademarks

The following names used in connection with the device, its optional equipment and its accessories are trademarks or registered trademarks of other companies:

CANopen®, CiA®	CANopen® and CiA® are registered European Union trademarks of CAN in AUTOMATION e.V., Nuremberg, Germany.
CODESYS®	CODESYS® is a registered trademark of 3S-Smart Software Solutions GmbH, Kempten, Germany.
DESINA®	DESINA® is a registered trademark of VDW Verein Deutscher Werkzeugmaschinenfabriken e. V., Frankfurt, Germany.
EnDat®	EnDat® and the EnDat® logo are registered trademarks of Dr. Johannes Heidenhain GmbH, Traunreut, Germany.
EtherCAT®, Safety over EtherCAT®, TwinCAT®	EtherCAT®, Safety over EtherCAT® and TwinCAT® are registered trademarks of patented technologies licensed by Beckhoff Automation GmbH, Verl, Germany.
HIPERFACE®	HIPERFACE® and the HIPERFACE DSL® logo are registered trademarks of SICK STEGMANN GmbH, Donaueschingen, Germany.
Intel®, Intel® Atom™, Intel® Core™	Intel®, the Intel® logo, Intel® Atom™ and Intel® Core™ are registered trademarks of Intel Corporation or its subsidiaries in the United States and other countries.
PLCopen®	PLCopen® is a registered trademark of the PLCopen Organisation, Gorinchem, Netherlands.
PROFIBUS®, PROFINET®	The PROFIBUS and the PROFINET logo are registered trademarks of PROFIBUS Nutzerorganisation e.V., Karlsruhe, Germany.
RINGFEDER®	RINGFEDER® is a registered trademark of VBG GROUP TRUCK EQUIPMENT GmbH, Krefeld, Germany.
speedtec®	speedtec® is a registered trademark of TE Connectivity Industrial GmbH, Niederwinkling, Germany.
Windows®, Windows® 7, Windows® 10	Windows®, das Windows®-Logo, Windows® XP, Windows® 7 und Windows® 10 are registered trademarks of Microsoft Corporation in the United States and/or other countries.

12.3 Sales terms and delivery conditions

You can find our current sales terms and delivery conditions at http://www.stoeber.de/en/gtc.

12.4 Publication details

Drives and automation catalog, ID 442711_en.

You can find suitable geared motors in our Synchronous Servo Geared Motors catalog, ID 442437_en.

You can find current versions of PDF files online at http://www.stoeber.de/en/downloads/.

STÖBER Antriebstechnik GmbH + Co. KG
Kieselbronner Strasse 12
75177 Pforzheim
Germany
Phone: +49 7231 582-0
mail@stoeber.de
www.stober.com

Service hotline:
+49 7231 582-3000

ID 442711_en.09 03/2021

We reserve the right to make technical changes.

STÖBER