3 Drive controllers

SC6

3.1 Overview

Our more compact version for the encoderless Lean motor

Features

- Single or double-axis controller with a nominal output current up to 19 A and 250% overload capacity
- Sensorless position control by STOBER Lean motors
- Control of rotary synchronous servo motors, asynchronous motors and torque motors
- HIPERFACE DSL One Cable Solution
- Electronic motor nameplate via HIPERFACE DSL or EnDat 2.2 digital encoder interface
- Integrated EtherCAT or PROFINET communication
- STO safety technology using terminals or STO and SS1 using FSoE (Safety over EtherCAT): SIL 3, PL e (cat. 4)
- Integrated brake control
- Single-ended nominal power consumption on double-axis controllers for operation of motors with different power
- Energy supply over DC link connection

3.1.1 Features

The compact stand-alone SC6 drive controller allows for sensorless control of STOBER LM series Lean motors. These motors provide energy efficiency at the performance level of a synchronous servo motor. They also guarantee high investment protection, thanks to energy efficiency class IE5 and the corresponding higher efficiency compared to IE4 asynchronous motors. However, the SC6 can also be used in combination with asynchronous motors or synchronous servo motors with encoders (e.g. the STOBER EZ series). The SC6 is available in three sizes with a nominal output current of up to 19 A: sizes 0 and 1 as a double-axis controller, size 2 as a single-axis controller.

STOBER synchronous servo motors are ideally intended for operation with the EnDat 2.1/2.2 digital encoder. These encoder systems can deliver the highest control quality. It is possible to perform motor parameterization automatically from the electronic motor nameplate.

The compact SC6 for Lean motors of the LM series

As small as a paperback

You save valuable space in your control cabinet because, with a width of just 45 mm, this drive controller is the most compact solution on the market. It offers all the features that a designer requires.

Quick DC-Link

The drive controllers have the option of a DC link connection. This technology makes it possible for the regenerative production of energy from one drive to be used as motor energy by another drive. The Quick DC-Link rear structure element has been developed to set up a reliable and efficient rail connection to the DC link connection. This optionally available accessory connects the DC links of the individual drive controllers by means of copper rails that can carry a load of up to 200 A. The rails can be attached without any tools using quick fastening clamps.

Perfectly adapted combinations

SC6 drive controllers can be combined with the STOBER SI6 and SD6 series as needed. For the general energy supply, the drive controllers from the SC6, SI6 and SD6 series are connected to each other using Quick DC-Link modules.

Tailored energy usage

When using double-axis modules, the unused power reserves of one axis can be used for other axes.

Precise dynamics

The drive controller provides acceleration that is literally as fast as lightning. For example, in conjunction with the STOBER EZ401 synchronous servo motor: from 0 to 3000 rpm in 10 ms.

Fewer clicks, less wiring

The installation of the drive controller is as easy as you could imagine. There is no difficult wiring. The encoder communication and power connection of the motor takes place using a common cable connection. The HIPERFACE DSL encoder system provides an electronic motor nameplate that takes care of the parameterization of motor data simply and safely. EnDat 2.2 digital offers an alternative interface, which also has an electronic nameplate function.

Safety functions

The safety concept of the drive controller is based on the STO (Safe Torque Off) function. The concept corresponds to SIL 3 according to DIN EN 61800-5-2 and PL e (Cat. 4) according to DIN EN ISO 13849-1. For double-axis controllers, the STO safety function has a two-channel structure that acts upon both axes. For connection to a higher-level safety circuit, different interfaces are available (terminals or FSoE).

Heavy duty

There is an extremely robust design concealed behind the elegant exterior. All components—from the stable, well-shielded sheet steel housing to the motor connectors—far exceed the set values of industry standards. The inside is also anything but small-scale: ample computer capacities, high-quality components, careful workmanship.

3.1.2 Software components

Project configuration and commissioning

The 6th generation of DriveControlSuite project configuration and commissioning software has all the functions for the efficient use of drive controllers in single-axis and multi-axis applications. The program guides you step by step through the complete project configuration and parameterization process using wizards.

Open communication

The Ethernet-based EtherCAT and PROFINET fieldbus systems are available in the drive controller as standard. Fieldbus communication can be specified using the firmware.

Applications

Drive-based motion control is recommended for the decentralized motion control of sophisticated machines.

The drive-based application package from STOBER is the right choice wherever universal and flexible solutions are needed. The STOBER Drive Based application provides drive-based motion control for positioning, velocity and torque/force with the PLCopen Motion Control command set. These standard commands have been combined into operating modes for different applications and supplemented with additional functions such as motion block linking, cams and much more. For the command operating mode, all properties of the movements are specified directly by the controller. The properties of the movements in the drive are predefined in the motion block operating mode so that only a start signal is necessary to perform the movement. Linking can be used to define complete motion sequences. There is a separate operating mode available for applications controlled by velocity or torque/force such as pumps, fans or conveyor belts. This also allows for operation without a controller.

In addition, the CiA 402 application is also available, which includes both the controller-based and drive-based operating modes (csp, csv, cst, ip, pp, pv, pt).

3.1.3 Application training

STOBER offers a multi-level training program that focuses essentially on application programming of the motion controller and drive controller.

G6 Basic

Training content: System overview, installation and commissioning of the drive controller. Use of option modules. Parameterization, commissioning and diagnostics using the commissioning software. Remote maintenance. Basics of controller optimization. Configuration of the drive train. Integrated software functions. Software applications. Connection to a higher-level controller. Basics of safety technology. Practical exercises on training topics.

Software used: DriveControlSuite.

G6 Advanced

Training content: Special knowledge for regulating, control and safety technology. Practical exercises on training topics.

3.2 Technical data

Technical data for the drive controller can be found in the following chapters.

3.2.1 Type designation

SC	**6**	**A**	**0**	**6**	**2**	**Z**

Tab. 1: Example code for type designation

Code	Designation	Design
SC	Series	ServoCompact
6	Generation	Generation 6
A	Version	
0 – 2	Size	
6	Power output stage	Power output stage within the size
2 1	Axis controller	Double-axis controller Single-axis controller
Z R Y	Safety technology	SZ6: Without safety technology SR6: STO using terminals SY6: STO and SS1 using FSoE

Tab. 2: Meaning of the example code

3.2.2 Sizes

Type	ID No.	Size
SC6A062	56690	Size 0
SC6A162	56691	Size 1
SC6A261	56692	Size 2

Tab. 3: Available SC6 types and sizes

SC6 in sizes 0 to 2

Note that the basic device is delivered without terminals. Suitable terminal sets are available separately for each size.

3.2.3 General technical data

The following specifications apply to all drive controller types.

Device features	
Protection class of the device	IP20
Protection class of the installation space	At least IP54
Radio interference suppression	Integrated line filter in accordance with EN 61800-3:2012, interference emission class C3
Overvoltage category	III in accordance with EN 61800-5-1:2008
Test symbols	CE

Tab. 4: Device features

Transport and storage conditions	
Storage/ transport temperature	−20 °C to +70 °C Maximum change: 20 K/h
Relative humidity	Maximum relative humidity 85%, non-condensing
Vibration (transport) in accordance with DIN EN 60068-2-6	5 Hz ≤ f ≤ 9 Hz: 3.5 mm 9 Hz ≤ f ≤ 200 Hz: 10 m/s² 200 Hz ≤ f ≤ 500 Hz: 15 m/s²
Fall height for freefall[1] Weight < 100 kg in accordance with DIN EN 61800-2 (or DIN EN 60721-3-2:1997, class 2M1)	0.25 m

Tab. 5: Transport and storage conditions

[1] Only valid for components in original packaging

Operating conditions	
Surrounding temperature during operation	0 °C to 45 °C with nominal data 45 °C to 55 °C with derating −2.5% / K
Relative humidity	Maximum relative humidity 85%, non-condensing
Installation altitude	0 m to 1000 m above sea level without restrictions 1000 m to 2000 m above sea level with −1.5%/100 m derating
Pollution degree	Pollution degree 2 in accordance with EN 50178
Ventilation	Installed fan
Vibration (operation) in accordance with DIN EN 60068-2-6	5 Hz ≤ f ≤ 9 Hz: 0.35 mm 9 Hz ≤ f ≤ 200 Hz: 1 m/s²

Tab. 6: Operating conditions

Discharge times	
Self-discharge of DC link	15 min

Tab. 7: Discharge times of the DC link circuit

3.2.4 Electrical data

The electrical data of the available SC6 sizes as well as the properties of the brake chopper can be found in the following sections.

Information

For the time span between two energizing processes, note that:

a) Direct, repeat activation of the supply voltage is possible for power-on/power-off operation.

b) A time span of > 15 must be observed between two energizing processes during continuous, cyclical power-on/power-off operation with increased charging capacity.

Information

The STO safety function is available for safe shutdown as an alternative to continuous, cyclical power-on/power-off operation.

An explanation of the symbols used for formulas can be found in Chapter [▶ 13.1].

3.2.4.1 Control unit

Electrical data	All types
U_{1CU}	24 V_{DC}, +20%/−15%
I_{1maxCU}	0.5 A

Tab. 8: Control unit electrical data

3.2.4.2 Power unit: Size 0

Electrical data	SC6A062
U_{1PU}	3 × 400 V_{AC}, +32% / −50%, 50/60 Hz; 3 × 480 V_{AC}, +10% / −58%, 50/60 Hz
f_{2PU}	0 – 700 Hz
U_{2PU}	0 – max. U_{1PU}
C_{PU}	270 µF
C_{maxPU}	1400 µF

Tab. 9: SC6 electrical data, size 0

The maximum charging capacity depends on the time between energizing two devices:

Information

If a time span of ≥ 15 min is maintained between energizing two devices, the maximum charging capacity C_{maxPU} increases to 1880 µF.

Nominal currents up to +45 °C (in the control cabinet)

Electrical data	SC6A062
$f_{PWM,PU}$	4 kHz
$I_{1N,PU}$	10 A
$I_{2N,PU}$	2 × 4.5 A
I_{2maxPU}	210% for 2 s

Tab. 10: SC6 electrical data, size 0, for 4 kHz clock frequency

Electrical data	SC6A062
$f_{PWM,PU}$	8 kHz
$I_{1N,PU}$	8.9 A
$I_{2N,PU}$	2 × 4 A
I_{2maxPU}	250% for 2 s

Tab. 11: SC6 electrical data, size 0, for 8 kHz clock frequency

Electrical data	SC6A062
U_{onCH}	780 – 800 V_{DC}
U_{offCH}	740 – 760 V_{DC}
R_{2minRB}	100 Ω
P_{maxRB}	6.4 kW
P_{effRB}	2.9 kW

Tab. 12: Brake chopper electrical data, size 0

3.2.4.3 Power unit: Size 1

Electrical data	SC6A162
U_{1PU}	3 × 400 V_{AC}, +32% / −50%, 50/60 Hz; 3 × 480 V_{AC}, +10% / −58%, 50/60 Hz
f_{2PU}	0 – 700 Hz
U_{2PU}	0 – max. U_{1PU}
C_{PU}	940 µF
C_{maxPU}	1400 µF

Tab. 13: SC6 electrical data, size 1

Information

If a time span of ≥ 15 min is maintained between energizing two devices, the maximum charging capacity C_{maxPU} increases to 1880 µF.

Nominal currents up to +45 °C (in the control cabinet)

Electrical data	SC6A162
$f_{PWM,PU}$	4 kHz
$I_{1N,PU}$	23.2 A
$I_{2N,PU}$	2 × 10 A
I_{2maxPU}	210% for 2 s

Tab. 14: SC6 electrical data, size 1, for 4 kHz clock frequency

Electrical data	SC6A162
$f_{PWM,PU}$	8 kHz
$I_{1N,PU}$	20.9 A
$I_{2N,PU}$	2 × 9 A
I_{2maxPU}	250% for 2 s

Tab. 15: SC6 electrical data, size 1, for 8 kHz clock frequency

Electrical data	SC6A162
U_{onCH}	780 – 800 V_{DC}
U_{offCH}	740 – 760 V_{DC}
R_{2minRB}	47 Ω
P_{maxRB}	13.6 kW
P_{effRB}	6.2 kW

Tab. 16: Brake chopper electrical data, size 1

3.2.4.4 Power unit: Size 2

Electrical data	SC6A261
U_{1PU}	3 × 400 V_{AC}, +32% / −50%, 50/60 Hz; 3 × 480 V_{AC}, +10% / −58%, 50/60 Hz
f_{2PU}	0 – 700 Hz
U_{2PU}	0 – max. U_{1PU}
C_{PU}	940 µF
C_{maxPU}	1400 µF

Tab. 17: SC6 electrical data, size 2

Information

If a time span of ≥ 15 min is maintained between energizing two devices, the maximum charging capacity C_{maxPU} increases to 1880 µF.

Nominal currents up to +45 °C (in the control cabinet)

Electrical data	SC6A261
$f_{PWM,PU}$	4 kHz
$I_{1N,PU}$	22.6 A
$I_{2N,PU}$	19 A
I_{2maxPU}	210% for 2 s

Tab. 18: SC6 electrical data, size 2, for 4 kHz clock frequency

Electrical data	SC6A261
$f_{PWM,PU}$	8 kHz
$I_{1N,PU}$	17.9 A
$I_{2N,PU}$	15 A
I_{2maxPU}	250% for 2 s

Tab. 19: SC6 electrical data, size 2, for 8 kHz clock frequency

Electrical data	SC6A261
U_{onCH}	780 – 800 V_{DC}
U_{offCH}	740 – 760 V_{DC}
R_{2minRB}	47 Ω
P_{maxRB}	13.6 kW
P_{effRB}	6.2 kW

Tab. 20: Brake chopper electrical data, size 2

3.2.4.5 Parallel connection

The charging capacity of the driver controllers can be increased by a parallel connection only if the power grid supply is connected to all drive controllers simultaneously.

3.2.4.6 Single-ended nominal power consumption on double-axis controllers

Operating two motors on one double-axis controller makes it possible to operate one of the motors with a continuous current above the nominal drive controller current if the continuous current of the second connected motor is lower than the nominal drive controller current. This enables economical combinations of double-axis controllers and motors.

The nominal output current for axis B can be determined using the following formula if the output current for axis A is known:

Example 1

$$I_{2PU(B)} = I_{2N,PU} - \left(I_{2PU(A)} - I_{2N,PU} \right) \times \frac{3}{5} \qquad \text{where} \qquad 0 \le I_{2PU(A)} \le I_{2N,PU}$$

Example 2

$$I_{2PU(B)} = I_{2N,PU} - \left(I_{2PU(A)} - I_{2N,PU} \right) \times \frac{5}{3} \qquad \text{where} \qquad I_{2N,PU} \le I_{2PU(A)} \le 1{,}6 \times I_{2N,PU}$$

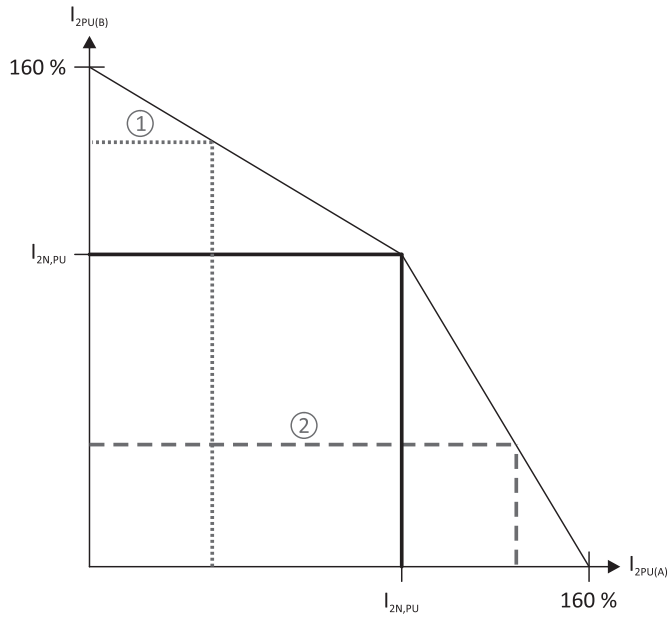

Fig. 1: Asymmetric load on double-axis controllers

Information

Note that the available maximum currents I_{2maxPU} of the axis controllers are also relative to the nominal output current $I_{2N,PU}$ for single-ended nominal power consumption.

3.2.4.7 Power loss data in accordance with EN 61800-9-2

Type	Nominal current $I_{2N,PU}$	Apparent power	Absolute losses $P_{V,CU}$[2]	Operating points[3]								IE class[4]	Compar-ison[5]
				(0/25)	(0/50)	(0/100)	(50/25)	(50/50)	(50/100)	(90/50)	(90/100)		
				Relative losses									
	[A]	[kVA]	[W]	[%]									
SC6A062	4.5	6.2	Max. 10	1.34	1.49	1.86	1.40	1.63	2.19	1.84	2.77	IE2	
SC6A162	10	13.9	Max. 10	0.76	0.92	1.43	0.81	1.04	1.75	1.22	2.29	IE2	
SC6A261	19	13.2	10	0.77	0.95	1.56	0.82	1.08	1.89	1.25	2.43	IE2	
				Absolute losses P_V									
	[A]	[kVA]	[W]	[W]									[%]
SC6A062	4.5	6.2	Max. 10	83.2	92.5	115.2	86.7	100.8	135.8	113.9	171.7	IE2	36.0
SC6A162	10	13.9	Max. 10	105.5	128.3	198.8	113.1	145.1	243.5	170.1	318.7	IE2	40.8
SC6A261	19	13.2	Max. 10	101.2	125.8	206.1	108.5	142.0	249.5	165.6	320.4	IE2	41.0

Tab. 21: Power loss data of the SC6 drive controller in accordance with EN 61800-9-2

General conditions

The specified losses apply to a drive controller. They apply to both axes together in the case of double-axis controllers.

The loss data applies to drive controllers without any accessories.

The power loss calculation is based on a three-phase supply voltage with 400 V_{AC}/50 Hz.

The calculated data includes a supplement of 10% in accordance with EN 61800-9-2.

The power loss specifications refer to a clock frequency of 4 kHz.

The absolute losses for a power unit that is switched off refer to the 24 V_{DC} power supply of the control electronics.

3.2.5 Derating

When dimensioning the drive controller, observe the derating of the nominal output current as a function of the clock frequency, surrounding temperature and installation altitude. There is no restriction for a surrounding temperature from 0 °C to 45 °C and an installation altitude of 0 m to 1000 m. The details given below apply to values outside these ranges.

3.2.5.1 Effect of the clock frequency

Changing the clock frequency f_{PWM} affects the amount of noise produced by the drive, among other things. However, increasing the clock frequency results in increased losses. During project configuration, define the highest clock frequency and use it to determine the nominal output current $I_{2N,PU}$ for dimensioning the drive controller.

Type	$I_{2N,PU}$ 4 kHz [A]	$I_{2N,PU}$ 8 kHz [A]	$I_{2N,PU}$ 16 kHz [A]
SC6A062	2 × 4.5	2 × 4	2 × 3
SC6A162	2 × 10	2 × 9	2 × 5
SC6A261	19	15	8

Tab. 22: Nominal output current $I_{2N,PU}$ dependent on the clock frequency

[2] Absolute losses for a power unit that is switched off

[3] Operating points for relative motor stator frequency in % and relative torque current in %

[4] IE class in accordance with EN 61800-9-2

[5] Comparison of the losses for the reference drive controller relative to IE2 in the nominal point (90, 100)

3.2.5.2 Effect of the surrounding temperature

Derating as a function of the surrounding temperature is determined as follows:

- 0 °C to 45 °C: No restrictions (D_T = 100%)
- 45 °C to 55 °C: Derating −2.5%/K

Example

The drive controller needs to be operated at 50 °C.

The derating factor D_T is calculated as follows
D_T= 100% − 5 × 2.5% = 87.5%

3.2.5.3 Effect of the installation altitude

Derating as a function of the installation altitude is determined as follows:

- 0 m to 1000 m: No restriction (D_{IA} = 100%)
- 1000 m to 2000 m: Derating −1.5%/100 m

Example

The drive controller needs to be installed at an altitude of 1500 m above sea level.

The derating factor D_{IA} is calculated as follows:
D_{IA} = 100% − 5 × 1.5% = 92.5%

3.2.5.4 Calculating the derating

Follow these steps for the calculation:

1. Determine the highest clock frequency (f_{PWM}) that will be used during operation and use it to determine the nominal current $I_{2N,PU}$.
2. Determine the derating factors for installation altitude and surrounding temperature.
3. Calculate the reduced nominal current $I_{2N,PU(red)}$ in accordance with the following formula:
   $I_{2N,PU(red)} = I_{2N,PU} \times D_T \times D_{IA}$

Example

A drive controller of type SC6A062 needs to be operated at a clock frequency of 8 kHz at an altitude of 1500 m above sea level and a surrounding temperature of 50 °C.

The nominal current of the SC6A062 at 8 kHz is 4 A per axis. The derating factor D_T is calculated as follows:
D_T = 100% − 5 × 2.5% = 87.5%

The derating factor D_{IA} is calculated as follows:
D_{IA} = 100% − 5 × 1.5% = 92.5%

The output current of importance for the project configuration is:
$I_{2N,PU(red)}$ = 4 A × 0.875 × 0.925 = 3.24 A

3.2.6 Dimensions

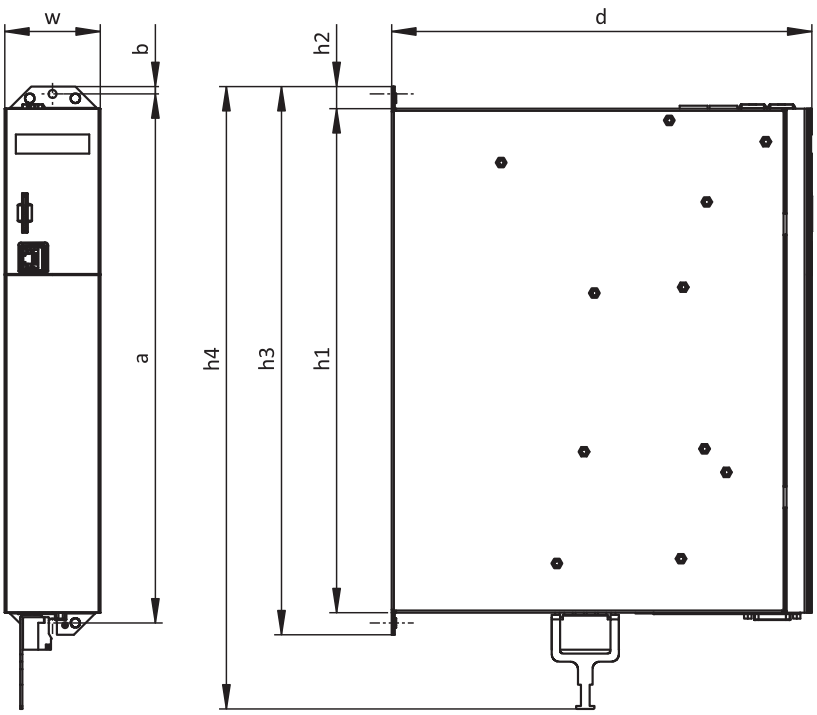

Fig. 2: SC6 dimensional drawing

Dimension			Size 0	Size 1	Size 2
Drive Controllers	Width	w	45	65	
	Depth	d	265	286	
	Body height	h1	343		
	Fastening clip height	h2	15		
	Height incl. fastening clips	h3	373		
	Total height incl. shield connection	h4	423		
Fastening holes (M5)	Vertical distance	a	360+2		
	Vertical distance to the upper edge	b	5		

Tab. 23: SC6 dimensions [mm]

3.2.7 Weight

Type	Weight without packaging [g]	Weight with packaging [g]
SC6A062	3600	5200
SC6A162	5300	6700
SC6A261	5200	6400

Tab. 24: SC6 weight [g]

3.2.8 Minimum clearances

Drive controller

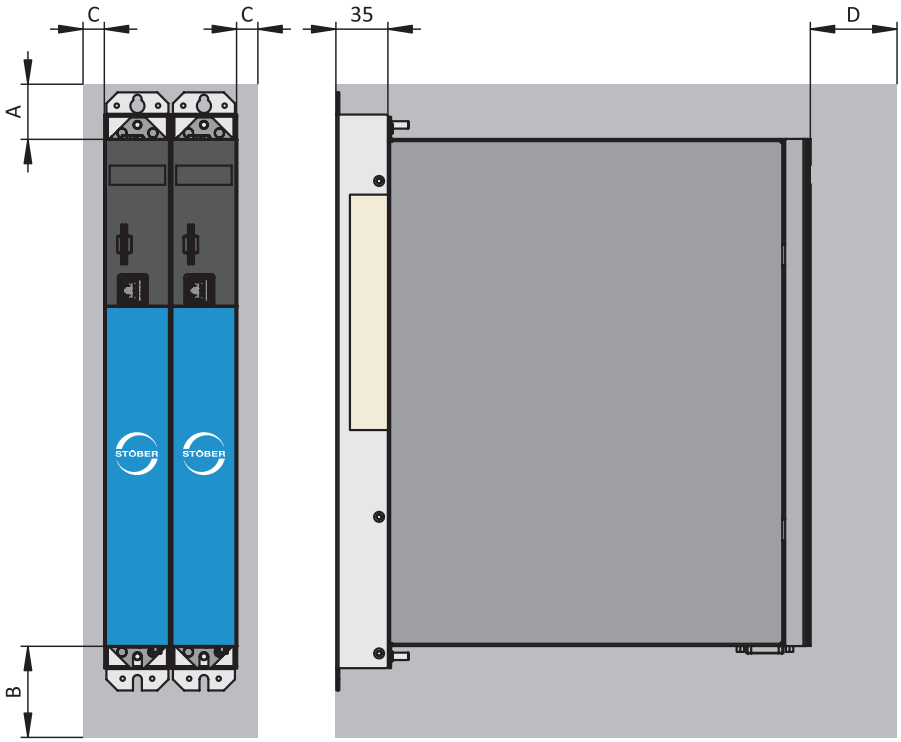

Fig. 3: Minimum clearances

The specified dimensions relate to the outer edges of the drive controller.

Minimum clearance	A (above)	B (below)	C (on the side)	D (in front)
All sizes	100	200	5	50[6]

Tab. 25: Minimum clearances [mm]

Braking resistors

Avoid installation below drive controllers or supply modules. In order for heated air to flow out unimpeded, a minimum clearance of approximately 200 mm must be maintained in relation to neighboring components or walls and approximately 300 mm must be maintained to components above or ceilings.

[6] Minimum clearance to be taken into account for permanent connection of the X9 service interface

3.3 Drive controller/motor combinations

An explanation of the symbols used for formulas can be found in Chapter [▶ 13.1].

EZ synchronous servo motor (n_N = 3000 rpm) – SC6

						SC6A062	SC6A162	SC6A261	SC6A062	SC6A162	SC6A261
						$I_{2N,PU}$ [A] ($f_{PWM,PU}$ = 4 kHz)			$I_{2N,PU}$ [A] ($f_{PWM,PU}$ = 8 kHz)		
	K_{EM} [V/1000 rpm]	M_N [Nm]	I_N [A]	M_0 [Nm]	I_0 [A]	4.5	10	19	4	9	15
IC 410 convection cooling						$I_{2N,PU}$ / I_0					
EZ301U	40	0.93	1.99	0.95	2.02	2.2			2.0		
EZ302U	86	1.59	1.6	1.68	1.67	2.7			2.4		
EZ303U	109	2.07	1.63	2.19	1.71	2.6			2.3		
EZ401U	96	2.8	2.74	3	2.88	1.6			1.4		
EZ402U	94	4.7	4.4	5.2	4.8		2.1			1.9	
EZ404U	116	6.9	5.8	8.6	6.6		1.5			1.4	
EZ501U	97	4.3	3.74	4.7	4	1.1			1.0		
EZ502U	121	7.4	5.46	8	5.76		1.7			1.6	
EZ503U	119	9.7	6.9	11.1	7.67		1.3			1.2	2.0
EZ505U	141	13.5	8.8	16	10		1.0	1.9			1.5
EZ701U	95	7.4	7.2	8.3	8		1.3			1.1	1.9
EZ702U	133	12	8.2	14.4	9.6		1.0	2.0			1.6
EZ703U	122	16.5	11.4	20.8	14			1.4			1.1
IC 416 forced ventilation						$I_{2N,PU}$ / I_0					
EZ401B	96	3.4	3.4	3.7	3.6	1.3			1.1		
EZ402B	94	5.9	5.5	6.3	5.8		1.7			1.6	
EZ404B	116	10.2	8.2	11.2	8.7		1.1	2.2		1.0	1.7
EZ501B	97	5.4	4.7	5.8	5		2.0			1.8	
EZ502B	121	10.3	7.8	11.2	8.16		1.2			1.1	1.8
EZ503B	119	14.4	10.9	15.9	11.8			1.6			1.3
EZ505B	141	20.2	13.7	23.4	14.7			1.3			1.0
EZ701B	95	9.7	9.5	10.5	10		1.0	1.9			1.5
EZ702B	133	16.6	11.8	19.3	12.9			1.5			1.2

EZ synchronous servo motor (n_N = 4500 rpm) – SC6

						SC6A062	SC6A162	SC6A261	SC6A062	SC6A162	SC6A261
						$I_{2N,PU}$ [A] ($f_{PWM,PU}$ = 4 kHz)			$I_{2N,PU}$ [A] ($f_{PWM,PU}$ = 8 kHz)		
	K_{EM} [V/1000 rpm]	M_N [Nm]	I_N [A]	M_0 [Nm]	I_0 [A]	4.5	10	19	4	9	15
IC 410 convection cooling						$I_{2N,PU}$ / I_0					
EZ505U	103	9.5	8.9	15.3	13.4			1.4			1.1
EZ703U	99	12.1	11.5	20	17.8			1.1			

EZ synchronous servo motor (n_N = 6000 rpm) – SC6

						SC6A062	SC6A162	SC6A261	SC6A062	SC6A162	SC6A261
						$I_{2N,PU}$ [A] ($f_{PWM,PU}$ = 4 kHz)			$I_{2N,PU}$ [A] ($f_{PWM,PU}$ = 8 kHz)		
	K_{EM} [V/1000 rpm]	M_N [Nm]	I_N [A]	M_0 [Nm]	I_0 [A]	4.5	10	19	4	9	15
IC 410 convection cooling						$I_{2N,PU}$ / I_0					
EZ301U	40	0.89	1.93	0.95	2.02	2.2			2.0		
EZ302U	42	1.5	3.18	1.68	3.48	1.3			1.1		
EZ303U	55	1.96	3.17	2.25	3.55	1.3			1.1		
EZ401U	47	2.3	4.56	2.8	5.36		1.9			1.7	
EZ402U	60	3.5	5.65	4.9	7.43		1.3			1.2	2.0
EZ404U	78	5.8	7.18	8.4	9.78		1.0	1.9			1.5
EZ501U	68	3.4	4.77	4.4	5.8		1.7			1.6	
EZ502U	72	5.2	7.35	7.8	9.8		1.0	1.9			1.5
EZ503U	84	6.2	7.64	10.6	11.6			1.6			1.3
EZ701U	76	5.2	6.68	7.9	9.38		1.1	2.0			1.6
EZ702U	82	7.2	8.96	14.3	16.5			1.2			
IC 416 forced ventilation						$I_{2N,PU}$ / I_0					
EZ401B	47	2.9	5.62	3.5	6.83		1.5			1.3	2.2
EZ402B	60	5.1	7.88	6.4	9.34		1.1	2.0			1.6
EZ404B	78	8	9.98	10.5	12			1.6			1.3
EZ501B	68	4.5	6.7	5.7	7.5		1.3			1.2	2.0
EZ502B	72	8.2	11.4	10.5	13.4			1.4			1.1
EZ503B	84	10.4	13.5	14.8	15.9			1.2			
EZ701B	76	7.5	10.6	10.2	12.4			1.5			1.2
EZ702B	82	12.5	16.7	19.3	22.1						

EZHD synchronous servo motor with hollow shaft and direct drive (n_N = 3000 rpm) – SC6

						SC6A062	SC6A162	SC6A261	SC6A062	SC6A162	SC6A261
						$I_{2N,PU}$ [A] ($f_{PWM,PU}$ = 4 kHz)			$I_{2N,PU}$ [A] ($f_{PWM,PU}$ = 8 kHz)		
	K_{EM} [V/1000 rpm]	M_N [Nm]	I_N [A]	M_0 [Nm]	I_0 [A]	4.5	10	19	4	9	15
IC 410 convection cooling						$I_{2N,PU}$ / I_0					
EZHD0411U	96	1.9	2.36	2.6	2.89	1.6			1.4		
EZHD0412U	94	4.2	4.29	5.1	4.94		2.0			1.8	
EZHD0414U	116	7.7	6.3	8.5	6.88		1.5			1.3	
EZHD0511U	97	3	3.32	4.1	4.06	1.1					
EZHD0512U	121	7.0	5.59	7.8	6.13		1.6			1.5	
EZHD0513U	119	8.3	7.04	10.9	8.76		1.1	2.2		1.0	1.7
EZHD0515U	141	14	9.46	16.4	11			1.7			1.4
EZHD0711U	95	7.3	7.53	7.9	7.98		1.3			1.1	1.9
EZHD0712U	133	11.6	8.18	14.4	9.99		1.0	1.9			1.5
EZHD0713U	122	17.8	13.4	20.4	15.1			1.3			

EZHP planetary geared motor with hollow shaft (n_N = 3000 rpm) – SC6

						SC6A062	SC6A162	SC6A261	SC6A062	SC6A162	SC6A261
						$I_{2N,PU}$ [A] ($f_{PWM,PU}$ = 4 kHz)			$I_{2N,PU}$ [A] ($f_{PWM,PU}$ = 8 kHz)		
	K_{EM} [V/1000 rpm]	M_N [Nm]	I_N [A]	M_0 [Nm]	I_0 [A]	4.5	10	19	4	9	15
IC 410 convection cooling						$I_{2N,PU}$ / I_0					
EZHP_511U	97	3	3.32	4.1	4.06	1.1					
EZHP_512U	121	7.0	5.59	7.8	6.13		1.6			1.5	
EZHP_513U	119	8.3	7.04	10.9	8.76		1.1	2.2		1.0	1.7
EZHP_515U	141	14	9.46	16.4	11			1.7			1.9
EZHP_711U	95	7.3	7.53	7.9	7.98		1.3			1.1	1.5
EZHP_712U	133	11.6	8.18	14.4	9.99		1.0	1.9			1.5
EZHP_713U	122	17.8	13.4	20.4	15.1			1.3			
EZHP_715U	140	24.6	17.2	31.1	21.1						

More information on EZHP planetary geared motors with hollow shaft can be found at http://www.stoeber.de/en/download in the synchronous servo geared motors catalog, ID 442437_en.

EZS synchronous servo motor for screw drive (driven threaded spindle) (n_N = 3000 rpm) – SC6

						SC6A062	SC6A162	SC6A261	SC6A062	SC6A162	SC6A261
						$I_{2N,PU}$ [A] ($f_{PWM,PU}$ = 4 kHz)			$I_{2N,PU}$ [A] ($f_{PWM,PU}$ = 8 kHz)		
	K_{EM} [V/1000 rpm]	M_N [Nm]	I_N [A]	M_0 [Nm]	I_0 [A]	4.5	10	19	4	9	15
IC 410 convection cooling						$I_{2N,PU}$ / I_0					
EZS501U	97	3.85	3.65	4.3	3.95	1.1			1.0		
EZS502U	121	6.9	5.3	7.55	5.7		1.6			1.6	
EZS503U	119	9.1	6.7	10.7	7.6		1.3			1.2	2.0
EZS701U	95	6.65	6.8	7.65	7.7		1.3			1.2	1.9
EZS702U	133	11	7.75	13.5	9.25		1.1	2.1			1.6
EZS703U	122	15.3	10.8	19.7	13.5			1.4			1.1
IC 416 forced ventilation						$I_{2N,PU}$ / I_0					
EZS501B	97	5.1	4.7	5.45	5		2.0			1.8	
EZS502B	121	10	7.8	10.9	8.16		1.2			1.1	1.8
EZS503B	119	14.1	10.9	15.6	11.8			1.6			1.3
EZS701B	95	9.35	9.5	10.2	10		1.0	1.9			1.5
EZS702B	133	16.3	11.8	19	12.9			1.5			1.2

EZM synchronous servo motor for screw drive (driven threaded nut) (n_N = 3000 rpm) – SI6

						SC6A062	SC6A162	SC6A261	SC6A062	SC6A162	SC6A261
						$I_{2N,PU}$ [A] ($f_{PWM,PU}$ = 4 kHz)			$I_{2N,PU}$ [A] ($f_{PWM,PU}$ = 8 kHz)		
	K_{EM} [V/1000 rpm]	M_N [Nm]	I_N [A]	M_0 [Nm]	I_0 [A]	4.5	10	19	4	9	15
IC 410 convection cooling						$I_{2N,PU}$ / I_0					
EZM511U	97	3.65	3.55	4.25	4	1.1			1.0		
EZM512U	121	6.6	5.2	7.55	5.75		1.7			1.6	
EZM513U	119	8.8	6.55	10.6	7.6		1.3			1.2	2.0
EZM711U	95	6.35	6.6	7.3	7.4		1.4			1.2	2.0
EZM712U	133	10.6	7.5	13	8.9		1.1	2.1		1.0	1.7
EZM713U	122	14.7	10.4	18.9	13			1.5			1.2

3.4 Accessories

You can find information about the available accessories in the following chapters.

3.4.1 Safety technology

Information

Note that the drive controller is delivered as a standard version without safety technology (SZ6 option). If you want a drive controller with integrated safety technology, you must order it together with the drive controller. The safety modules are an integrated part of the drive controllers and must not be modified.

SZ6 option – Without safety technology

ID No. 56660
Standard version.

SR6 safety module – STO using terminals

ID No. 56661
Optional accessory for the use of the Safe Torque Off safety function (STO) in safety-relevant applications (PL e, SIL 3) in accordance with DIN EN ISO 13849-1 and DIN EN 61800-5-2. Connection to higher-level safety circuit through terminal X12 (included in the terminal set scope of delivery).

SY6 safety module – STO and SS1 using FSoE

ID No. 56662
Optional accessory for the use of the Safe Torque Off (STO) and Safe Stop 1 (SS1) safety functions in safety-relevant applications (PL e, SIL 3) in accordance with DIN EN ISO 13849-1 and DIN EN 61800-5-2. Connection to the higher-level safety circuit using Fail Safe over EtherCAT (FSoE).

3.4.2 Communication

The drive controller has two interfaces for the fieldbus connection on the top of the device as well as an Ethernet service port on the front of the device. Cables for the connection are available separately.

EtherCAT or PROFINET fieldbus system

Please specify the desired fieldbus system when placing your purchase order for the base device.

EtherCAT cables

Ethernet patch cable, CAT5e, yellow.
The following designs are available:
ID No. 49313: Length approx. 0.2 m.
ID No. 49314: Length approx. 0.35 m.

PC connecting cables

ID No. 49857
Cable for connecting the X9 service interface to the PC, CAT5e, blue, 5 m.

USB 2.0 Ethernet adapters

ID No. 49940
Adapter for connecting Ethernet to a USB port.

3.4.3 Terminal set

For connection, you need the fitting terminal set for each SC6 drive controller.

Terminal set for drive controller

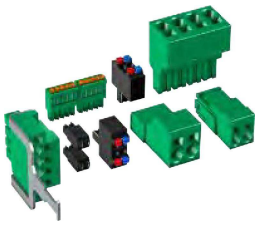

The following designs are available:
ID No. 138652
Terminal set for SC6A062Z/Y.
ID No. 138653
Terminal set for SC6A162Z/Y.
ID No. 138654
Terminal set for SC6A261Z/Y.

3.4.4 DC link connection

If you want to connect SC6 drive controllers into the DC link group, you will need Quick DC-Link modules of type DL6B.

You receive the DL6B rear section modules in different designs for a horizontal connection, suitable for the size of the drive controller.

The quick fastening clamps for attaching the copper rails and an insulation connection piece are contained in the scope of delivery. The copper rails are not included in the scope of delivery. These must have a cross-section of 5 x 12 mm. Insulation end sections are available separately.

Quick DC-Link DL6B for drive controller

The following designs are available:
DL6B10
ID No. 56655
Rear section module for size 0 drive controller:
SC6A062
DL6B11
ID No. 56656
Rear section module for size 1 or 2 drive controller:
SC6A162 and SC6A261

Quick DC-Link DL6B insulation end section

ID No. 56659
Insulation end sections for the left and right termination of the group, 2 pcs.

3.4.5 Braking resistor

In addition to drive controllers, STOBER offers the following braking resistors described below in various sizes and performance classes. For the selection, note the minimum permitted braking resistors specified in the technical data of the individual drive controller types.

3.4.5.1 Tubular fixed resistor FZMU, FZZMU

Type	FZMU 400×65	FZZMU 400×65
ID No.	49010	53895
SC6A062	X	—
SC6A162	(X)	X
SC6A261	(X)	X

Tab. 26: Assignment of FZMU, FZZMU braking resistor – SC6 drive controller

X	Recommended
(X)	Possible
—	Not possible

Properties

Specification	FZMU 400×65	FZZMU 400×65
ID No.	49010	53895
Type	Tubular fixed resistor	Tubular fixed resistor
Resistance [Ω]	100	47
Power [W]	600	1200
Therm. time const. τ_{th} [s]	40	40
Pulse power for < 1 s [kW]	18	36
U_{max} [V]	848	848
Weight [kg]	Approx. 2.2	Approx. 4.2
Protection class	IP20	IP20
Test symbols	c UL us CE	c UL us CE

Tab. 27: FZMU, FZZMU specification

Dimensions

Dimension	FZMU 400×65	FZZMU 400×65
ID No.	49010	53895
L x D	400 × 65	400 × 65
H	120	120
K	6.5 × 12	6.5 × 12
M	430	426
O	485	450
R	92	185
U	64	150
X	10	10

Tab. 28: FZMU, FZZMU dimensions [mm]

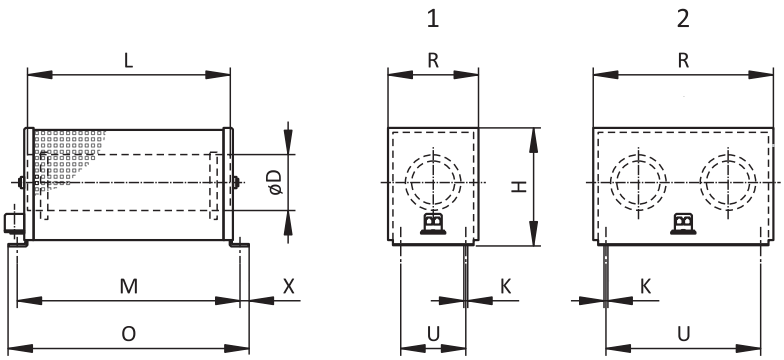

Fig. 4: FZMU (1), FZZMU (2) dimensional drawing

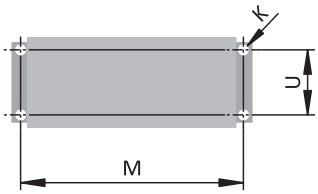

Fig. 5: FZMU, FZZMU drilling diagram

3.4.5.2 Flat resistor GVADU, GBADU

Type	GVADU 210×20	GBADU 265×30	GBADU 335×30
ID No.	55441	55442	55443
SC6A062	X	X	—
SC6A162	(X)	(X)	X
SC6A261	(X)	(X)	X

Tab. 29: Assignment of GVADU, GBADU braking resistor – SC6 drive controller

X	Recommended
(X)	Possible
—	Not possible

Properties

Specification	GVADU 210×20	GBADU 265×30	GBADU 335×30
ID No.	55441	55442	55443
Type	Flat resistor	Flat resistor	Flat resistor
Resistance [Ω]	100	100	47
Power [W]	150	300	400
Therm. time const. τ_{th} [s]	60	60	60
Pulse power for < 1 s [kW]	3.3	6.6	8.8
U_{max} [V]	848	848	848
Cable design	Radox	FEP	FEP
Cable length [mm]	500	500	500
Conductor cross-section [AWG]	18/19 (0.82 mm²)	14/19 (1.9 mm²)	14/19 (1.9 mm²)
Weight [g]	300	950	1200
Protection class	IP54	IP54	IP54
Test symbols			

Tab. 30: GVADU, GBADU specification

Dimensions

Dimension	GVADU 210×20	GBADU 265×30	GBADU 335×30
ID No.	55441	55442	55443
A	210	265	335
H	192	246	316
C	20	30	30
D	40	60	60
E	18.2	28.8	28.8
F	6.2	10.8	10.8
G	2	3	3
K	2.5	4	4
J	4.3	5.3	5.3
β	65°	73°	73°

Tab. 31: GVADU, GBADU dimensions [mm]

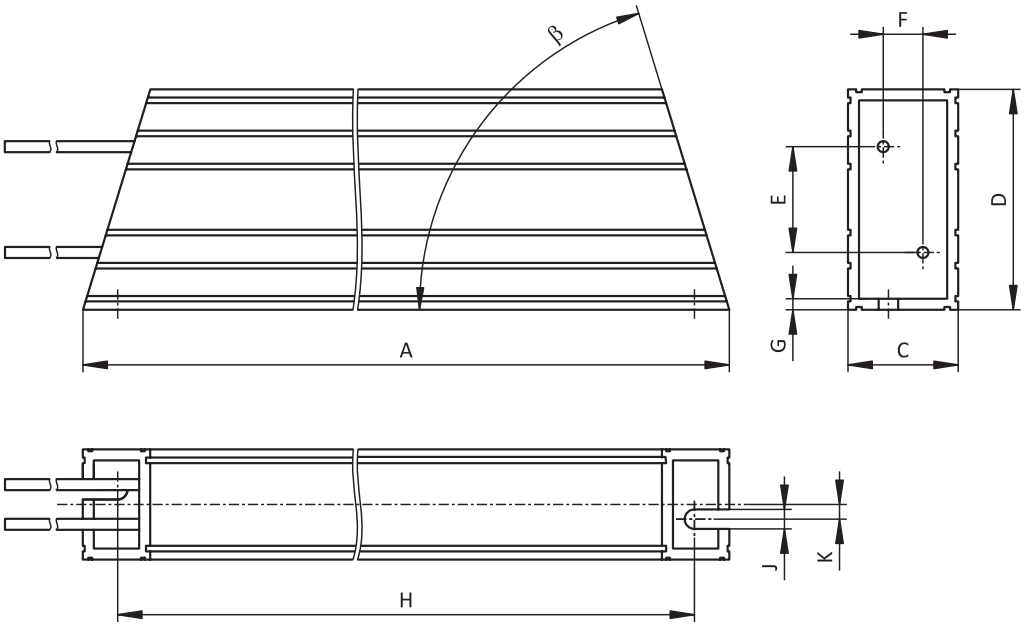

Fig. 6: GVADU, GBADU dimensional drawing

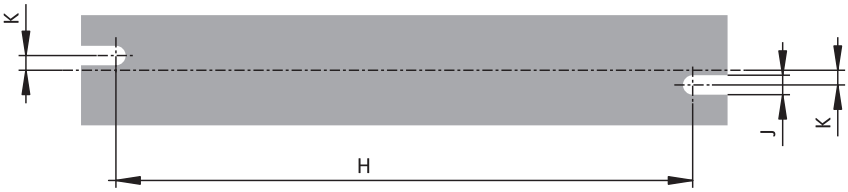

Fig. 7: GVADU, GBADU drilling diagram

3.4.6 Encoder battery module

Absolute Encoder Support AES

ID No. 55452
Battery module for buffering the power supply when using the EnDat 2.2 digital inductive encoder with battery-buffered multi-turn stage, for example EBI1135 or EBI135.
A battery is included.

Information

Note that a 15-pin extension cable between the socket and the AES may be necessary for the connection to the drive controller due to limited space.

a) A commercially available shielded extension cable with a 15-pin D-sub connector and a length of ≤ 1 m can be used between the socket and the AES.

AES replacement battery

ID No. 55453
Replacement battery for AES battery module.

3.4.7 HTL-to-TTL adapter

HT6 HTL-to-TTL adapter

ID No. 56665
Adapters for SC6 and SI6 series drive controllers for level conversion from HTL signals to TTL signals.
It is used to connect an HTL differential incremental encoder to terminal X4 of the drive controller.

3.5 Further information

3.5.1 Directives and standards

The following European directives and standards are relevant to the drive controllers:

- Machinery Directive 2006/42/EC
- Low Voltage Directive 2014/35/EU
- EMC Directive 2014/30/EU
- EN 61326-3-1:2008
- EN 61800-3:2004 and A1:2012
- EN 61800-5-1:2007
- EN 61800-5-2:2007
- EN 50178:1997
- IEC 61784-3:2010

3.5.2 Symbols, marks and test symbols

Grounding symbol
Grounding symbol in accordance with IEC 60417, symbol 5019.

RoHS lead-free mark
Marking in accordance with RoHS directive 2011-65-EU.

CE mark
Manufacturer's self declaration: The product meets the requirements of EU directives.

UL recognized component mark
This component or material is recognized by UL. Representative samples of this product have been evaluated by UL and meet applicable requirements.

3.5.3 Additional documentation

Additional documentation related to the product can be found at http://www.stoeber.de/en/download

Enter the ID of the documentation in the Search... field.

Documentation	ID
Manual for SC6 drive controllers	442790